RESCUE DRONE: DESIGN AND SIMULATION

A PROJECT REPORT

Submitted by

Maqueda Castellote, Javier (47996763-H)

School of Mechanical Engineering

SASTRA UNIVERSITY

MAY 2015

ACKNOWLEDGMENT

I would like to thank **SASTA UNIVERSITY** to receive me and bringing me this opportunity. My sincere and grateful thanks to **Prof. M. Sridharan** who works really hard to ensure and provide a great relationship between SASTRA and ETSEIB.

I want to thank also to my college **ETSEIB, "Escola Tècnica Superior Industrial"**, which have taught me during these challenging 5 years.

I cannot forget to thank wholeheartedly to my mentor and guide **C. Ramprasad,** he has teach me an uncountable amount of Aerial Vehicle knowledge thanks to his successful career.

I extend my thanks to **Mr. P. Deepak Raj** & **Ms. P. Dhivya,** Research Scholars who have been always on hand to help me no matter what reason.

I wish to thank all the **staff and students of SASTRA** to take care of me and make my stay as comfortable as home.

Last but not least I want to thank to **my family and close friends** who always have been supporting me no matter what happens.

Index

1. Preliminary design

"Conceptual design is the organized application of innovation to a real problem to produce a viable product for the customer."

(Anonymous)

The key of a worthy final product is an accurate preliminary design. It is the base of any project, and like the construction of any temple, if the base is not well defined and studied the whole structure will fall down and not work properly.

Which is why, this first chapter it is going to receive a notable effort, to be ensure that the product is viable and useful.

1.1. Problem definition

The preliminary design phase starts with the recognition of need. It continues identifying who will be the customers and which people will be involve with the aircraft.

1.1.1. Definition of the problem

Lately the authorities of the fireman department of Catalonia have notice a highly increasing of accidents at the mountains. The adventure sports are being a modern society way of life which people are exposing themselves to a difficult and risky environment without any knowledge of what it implies. The result is the increasing number of important accidents which unfortunately people can lost his life.

The first question it should be studied is: What are the tools of the "fireman mountain rescue department" in order to be efficient and to obtain satisfactory results concerning the mountain rescues?

The main and more useful tool is the helicopter. It allows a fast displacement in such a difficult environment where there are no roads and the ground is irregular. Moreover it reduce the difficulty and most important it reduce the time of identifying where the targets are. But that tool leads to a second question: Under what conditions the department can use this machine?

The answer is obvious, because of the possibility of accidents, only in good weather conditions and with a wide range of visibility. So finally this leads to the third and final question: What happens if the rescue department cannot use the helicopter?

Then the rescue is slower, increasing the target searching towards 4 or 5 hours. So that is a real and huge problem, for a human four or five hours under 3000 m altitude conditions can be the difference between life and dead. Here it comes the purpose of the project:

The design of a drone with the aim of flying under the non-permitted helicopter conditions and with the goal of search and locate the exact position of injured targets. That will offer a safe and fast searching without professional rescue lives in danger. The operation zone will be located at the Pyrenees.

1.1.2. Who are the costumers

As explained in the previous point, the costumers will be:

- People involved in a mountain accident
- Fireman rescue mountain department
- Government
- Engineers

1.2. Aircraft viability

"If everyone can agree beforehand on how to measure the effectiveness of the design, then the designer has a much simple task. But even if everyone does not agree, the designer should still quantify his own ideas to give himself a sensible guide".

A.W. Bishop of British Aerospace

To estimate the viability of the project it must be considered the following points:

- **Manufacturing cost:** At an initial stage, the design it is going to be performed with the aim of not overcome 3000 USD. This amount is based on the weight of the aircraft, the materials, the electric engine/s, the gadgets such as thermal cameras and automatic flight devices and finally, the manufacturing process.
- **Minimum direct operating cost (DOC):** this cost is associated with maintenance of the aircraft, fuel cost, operating knowledge, operating cost and depreciation. Due to an electric engine and the dimensions of the aircraft (RC model), this cost it will be really low. In fact a good design always try to look for a low DOC. It will be necessary a periodic engineering supervision and a regular buck up, but this will be include on the price of the aircraft by the

future company manufacturer. An initial estimation will quantify this cost around 500 USD per year.

A machine which can scan a vast amount of wild ground without any life risk at a fast speed target search, totally automatic including the navigation; it is such an effective way to save life. It is obvious that the machine cannot be useful without the intervention and the control of an expert rescue unit, it is only a great complementary instrument, in fact an extend knowledge of the zone and a huge range of experience on the field is needed to success on this new way to rescue. It is important to remember that new technology is useful as long as there is human intervention, technology never will be a replacement, just a complement to be more efficient and to do things easier.

1.3. Aircraft requirements

1.3.1. Market and mission issues

Due to the specific goal of this project, it is known that it is going to be difficult to take economic profit at an initial stage. It will take time to introduce this technology in the daily routine and in the rescue techniques. Teaching, practicing and trials will be the first stage to prof that this technology is not worthless, so a considerably initial effort will be essential.

Concerning the mission of the aircraft many equipment requirements will be needed to achieve the following characteristics:

- Autonomous flight
- Flight under bad weather conditions
- Flight under low temperatures conditions
- Human bodies detection
- Communication through GPS of the exact human bodies position to the rescue team
- "Safety kid and position indicators launch"

In order to face with all this needs several equipment will be needed. It will be specified on the point 1.3.1.4.

1.3.2. Airworthiness

It is complicated to find a regulation in the Spanish law due to this is a new rescue technology. Nevertheless, it exists a drone law (**"Real Decreto-Ley 8/2014"**) but it does not regulate activities such as the purpose of this project. It is really important to be aware of which are the legal conditions to develop and operate this aircraft in Spain. It is almost obvious that drone cannot be operated by the rescue fireman mountain unit without the buck up of drones companies such as “CatUav” or “Dronair”.

1.3.3. Environmental and social issues

It is undeniable that technology is directly involve in our society. How we manage and use this technology will define our future. The great power that technology has to solve problems and make people’s lives easier is breathtaking, but it cannot be forgotten that this fact implies a huge responsibility. As long as engineers have this into account, society will accept this raising development.

Concerning environmental issues it is fundamental that the design must be developed in order to decrease as much as possible, environmental damage. That must be one of the most important goals of each new design nowadays. Also it is important to be aware of visual and noise impact that the aircraft can produce on the outstanding mountain views and atmosphere. It cannot produce an impact to the people who is enjoying and living on such these beautiful places. Camouflage aircraft colors and low noise engine would be the first step to reduce impact.

1.3.4. Systems and equipment requirements

As commented before, to achieve and face the mission issues and the goals it is needed the following systems and equipment requirements:

- Thermal camera
- Vision camera
- Frequency transmitter
- Arduino autonomous flight system
- Flight stabilization system
- GPS transmitter position
- Position indicators kid (smoke indicators)
- Safe kid

On the next stage it will be exactly specified all these systems in terms of brand, weight, cost…

1.4. Performance and working aircraft example

This chapter is going to bring out an example of how the aircraft would work on a real situation.

One of the most popular mountain on Spain is the Aneto (3404 m / 11168 feet), located in Aragon. Only here, the rescue team did 27 operations in 3 months last summer which they had rescued 53 persons. So firstly it is obvious that people are not aware about their inexperience and the difficulties of such a wild environment. That is the first point it is need to be solved, it must be a mountaineer education. Despite the need of this mountaineer education improvement, accidents can always happen, so it is really important to be well prepared.

Normally, mountaineers choose the follow route to achieve this summit:

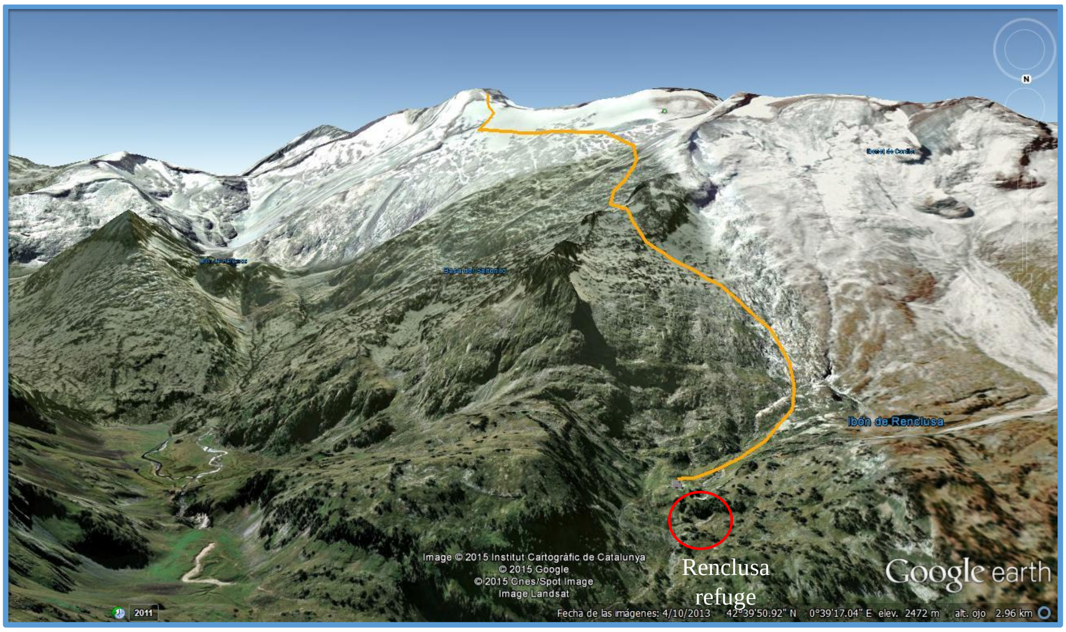

Figure 1: Aneto's route

Figure 2: Renclusa refuge

The route starts on Renclusa refuge and goes all the way up as it is show on figure 1. Mostly of the times guards who work on this refuge have a strict control of the people who are trying to achieve that summit.

The situation would be: “a normal summer day when 30 mountaineers would try to achieve the summit. Normally it would take, for a normal person, to complete the whole route ten hours. After 10 hours the guards are aware that 26 mountaineers are on the refuge with the summit on their pockets but 4 are missing. The sun is going down and the night is already coming. The rescue team has received an advice of this 4 mountaineers, one of them has broken the right leg and they are not able to give his position. Refuge guards inform to the rescue team that this mountaineers were trying to achieve Aneto following the “Rencluse route”. Temperature is decreasing fast, so it is important to find them as soon as possible. The rescue team cannot use the helicopter due to darkness, so it is time to use the rescue drone.

After studying the possibilities, the rescue team is going to search with two drones on the following two zones A and B:

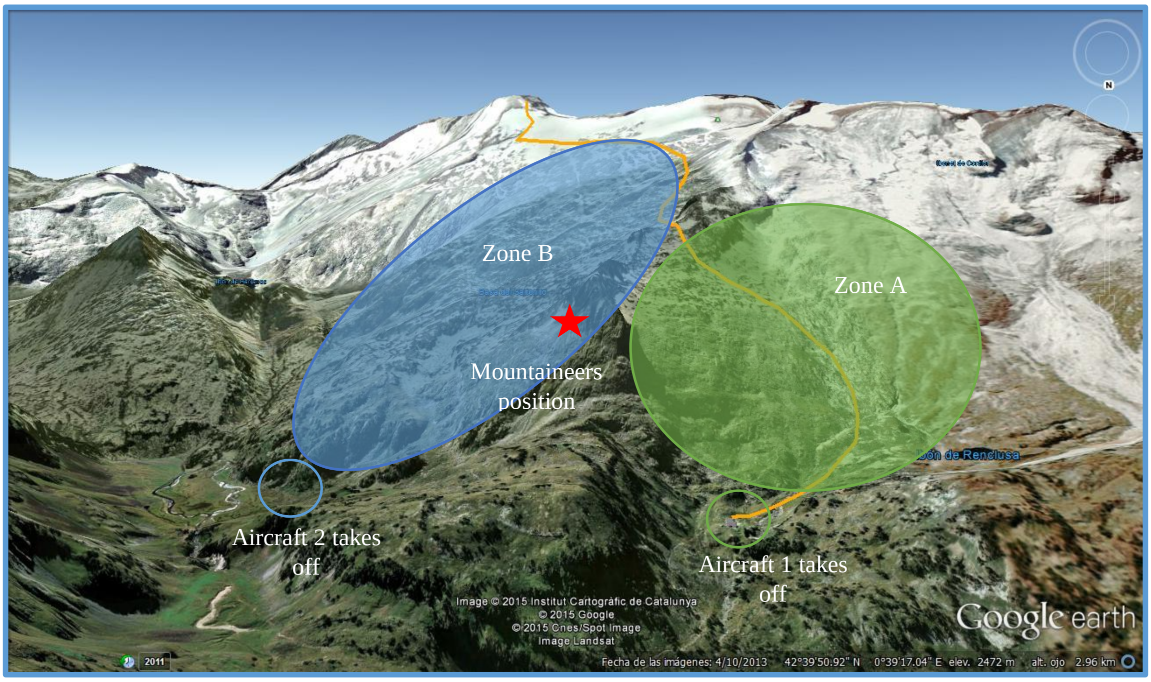

Figure 3: operation zones of the aircraft

Within 20 minutes aircraft 1 and 2 would be able to track their own zones A and B. After 15 minutes aircraft 2 finds the mountaineers on zone B, as figure 3 shows, they had taken a wrong route while they were trying to come back to the refuge. Immediately aircraft 2 sends the exact position of the target to the rescue team which is now his turn to rescue these people."

How aircrafts have helped on the operation?

	Walking	Aircraft
Search duration (hours)	4	0,2
Rescue duration (hours)	1	1
Total rescue duration (hours)	5	1,2
Reduce rescue time in (hours):	3,8	

Table 1: Rescue time estimation

It is undeniable that if this technology is able to work as in theory, time reducing can make a great difference concerning rescue lives.

1.5. Initial layout drawing and initial baseline sizing

With the purpose to come up with a design that meet all the requirements pointed previously, a first possible design is the next one:

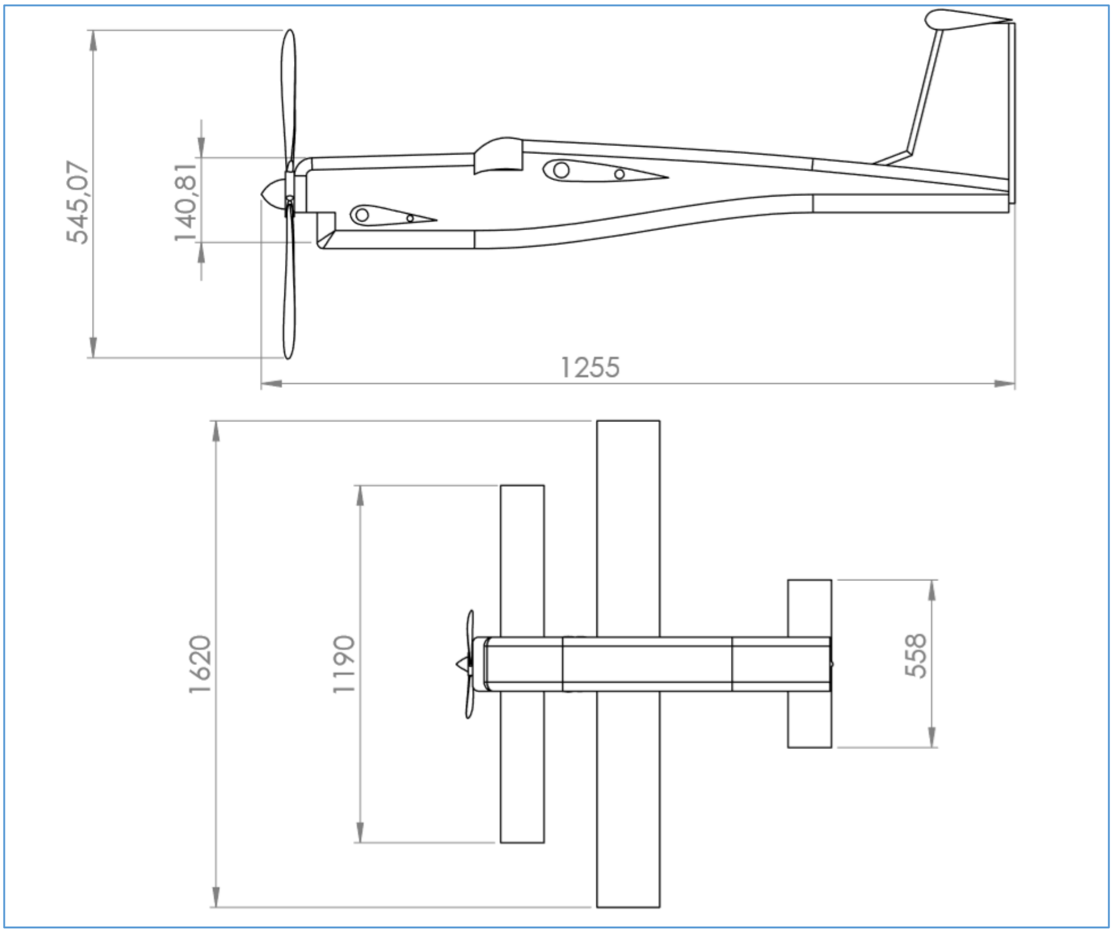

Figure 4: first layout and baseline sizing (mm)

1.6. Initial weight estimation

An initial weight estimation is necessary as part of a preliminary design. It is important to remain that on the next chapter it is going to carry out an accurate calculation:

$M_{TO} = M_E + M_{LOAD} + M_{PS}$

- M_{TO} = maximum take-off mass
- M_E = empty mass (baseline mass)

  Before calculating M_E, it is important to be aware that the main drone material is going to be **EPO FOAM**, density 30 Kg / m^3 due to the following reasons: Ease of cutting and molding for designs, good absorption to the first impact and also excellent thermal insulation. Furthermore good resistance to compression and very good value for quality and price.

  M_E = [0.03618834589 – (0.2* 0.03618834589)] m^3 x 30 Kg/m^3 = 0,869 Kg = 869 g.
- M_{LOAD} = mass of operation items

Item	Weight (g)
Thermal camera	72
Vision camera	83
Frequency transmitter	80
Arduino autonomous flight system	60
Flight stabilization system	17
Servos (9 g)	6 * 9 = 45
Servos (3 g)	3 * 3 = 9
Position indicators (smoke indicators)	10
Total theoretical design	385

Table 2: Operational aircraft systems weight estimation

- M_{PS} = mass of propulsion system and battery = “Scorpion HK-2206-3900kv Brushless Outrunner” **[170 g]** + “helix” **[15 g]** + “Turnigy 3S 2200mAh 20C lipoly battery” **[188 g]** = 373 g

M_{TO} (theoretical design) = $M_E + M_{LOAD} + M_{PS}$ = 1627 g

1.7. Aircraft: initial flight conditions and design characteristics

1.7.1. Flight conditions

Aircraft operation atmosphere will imply difficult conditions such as no visibility, high speed winds, high altitude, rain, snow… Flight conditions are specified on the following table:

Flight conditions	
Temperature	[-10ºC to 20 ºC]
Density	0,8575 Kg/m^3
Pressure	65861 Pa
Wind high speed	110 km/h
Climate conditions	Sun, rain, snow…
Ground	Not regular

Table 3: flight conditions

1.7.2. Aircraft main design characteristics

So far, it has been developed a first design which main characteristics are:

- **Low angle of attack (AOA):** That provides low lift but more stability in terms of "easy flight". As there is no need for low velocity flight due to the purpose of the drone flaps or high angle of alfa attack (AOA) is no needed. That allows the plane to fly easy and stable at rates between 30 km/h and 100 km/h. To solve the low lift problem provided by a low AOA it is presented the next main characteristic.
- **Three-surface design:** This is one of the most important characteristics of the design. It has been chosen because of:
  - ✓ $C_{L\ max}$ is increased substantially.
  - ✓ The negative angle of zero lift is increased.
  - ✓ Increased safety.
  - ✓ Smaller, lighter and more compact airplane.
- **No flaps:** At the mountains and wild environments it is important to assume that there will not be any landing road which is why landing is going to be directly on the grass without wheels or any landing system. That means no flaps are needed to operate the landing.
- **Green color:** The color of the aircraft must be respectful with a wild environment, it is important to be concern about the visual contamination despite the fact that

the drone is going to operate in non-visibility conditions such as flog, heavy rain, night…

The coming sections of this thesis explain accurately about the different parts of the drone.

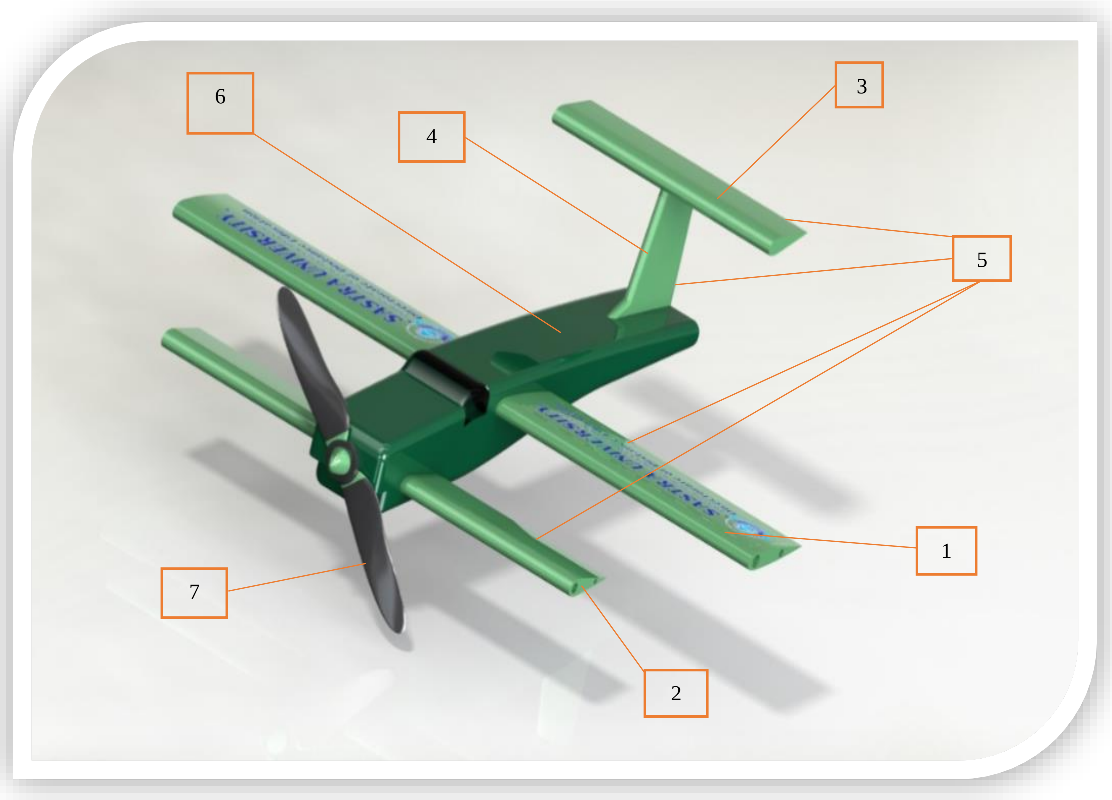

Figure 5: main aircraft characteristics

Aircraft component	Indicator number	Amount
Main wing	1	2
Increasing C_L wing	2	2
Elevation wing (T wing)	3	1
Helm	4	1
Flaps	5	6
Fuselage	6	1
Helix	7	1

Table 4: aircraft components

1.8. Initial budget

Project budget

Operation items

Equipment	AMOUNT	MODEL	WEB PAGE	MATERIAL COST (RP	SHIPPING COSTS (RP	OTHER COSTS (RP	TOTAL
Vision camera	1	Boscam TR1 FPV All-In-One Camera and 5.8 GHz Transmitter with HD Video recorder	http://www.hobbyki	₹ 5.560,00			
Arduino autonomous flight system	1	APM 2.5 and	https://store.3drobo	₹ 8.716,00			
GPS	1	APM 2.5 and	https://store.3drobo	₹ 6.226,00			
Transmitter	1	APM 2.5 and	https://store.3drobo	₹ 6.226,00			
Batery Arduino flight system	1	Turnigy 1000mAh 3S 20C Lipo Pack	http://www.hobbyki	₹ 342,00			
Radio transmitter	1	Spektrum DX7s 7 CH Transmitter with AR8000	http://store.3drobot	₹ 18.676,00			
Subtotal				**₹ 45.746,00**			**₹ 45.746,00**

Propulsion system

Propulsion system	AMOUNT	MODEL	WEB PAGE	MATERIAL COST (RP	SHIPPING COSTS (RP	OTHER COSTS (RP	TOTAL
Engine	1	Scorpion HK-2205-3200kv Brushless Outrunner	http://www.hobbyki	₹ 3.113,00			
Helix	1	Folding Propeller 14x10 W/ Alloy hub 50mm / 5.0mm shaft	http://www.hobbyki	₹ 713,00			
Helix	1	Folding Propeller Assembly 16.5x13 (Alloy/Hub Spinner) (1pc/bag)	http://www.hobbyki	₹ 491,00			
Batery	1	Turnigy 2200mAh 3S 25C Lipo Pack		₹ 558,43			
Servos	8	HXT900 9g / 1.6kg / .12sec Micro Servo	http://www.hobbyki	₹ 1.340,00			
Flaps and ailerons fixers	1	Hobby king model aircraft	http://www.hobbyki	₹ 374,00			
Subtotal				**₹ 6.589,43**			**₹ 6.589,43**

Baseline

Baseline	AMOUNT	MODEL	WEB PAGE	MATERIAL COST (RP	SHIPPING COSTS (RP	OTHER COSTS (RP	TOTAL
Fuselage and wings	1	EPO FOAM 30 Kg/m3	Hobby chaomi	₹ 3.500,00			
Sastra Stickers							
Subtotal				**₹ 3.500,00**			**₹ 3.500,00**

FABRICATION TOOLS

Fabrication tools	AMOUNT	MODEL	WEB PAGE	MATERIAL COST (RP	SHIPPING COSTS (RP	OTHER COSTS (RP	TOTAL
Subtotal							

Other costs

	AMOUNT						
Subtotal							

Subtotals							**₹ 55.835,43**
Incidentals	30%	0,3					16750,6
Further aplications	20%	0,2					11167,1
Total							**₹ 83.753,15**

Table 5: Project budget estimation

2. Refined initial design

At this point of the design process, it has obtained a drone layout that has been based mainly on estimations and crude assumptions with the backup of previous aircraft designs. It is now time to improve the situation and provide more confidence in the aircraft layout. It is obvious that the previous stage has been worth in terms of giving to the design process a first step, the foundations of what is going to be the aircraft. From the previous stage, it has obtained an initial geometric and configuration details and now will be perfectly defined. These includes, geometric and configurational details, aerodynamic simulations and coefficient assessments (lift and drag), mass of the aircraft and last but not least special aircraft components. With this data it is possible to undertake the fabrication of the prototype with enough solid background.

2.1. Refining initial layout

2.1.1. Aircraft layout

As it has been explained on the previous stage, the prototype is a three surface aircraft, which will provide to the aircraft enough lift without having to increase α attack. Providing a low α attack not only allows the aircraft to achieve high velocities but also a great flight stability.

First of all is going to be presented a general layout to get a main idea and gradually it will be presented the rest of the components. The following draws are adapted into A4 format. Below every draw it will be provided a render, an image as much as realistic as possible, to get a close idea of how the drone would look like.

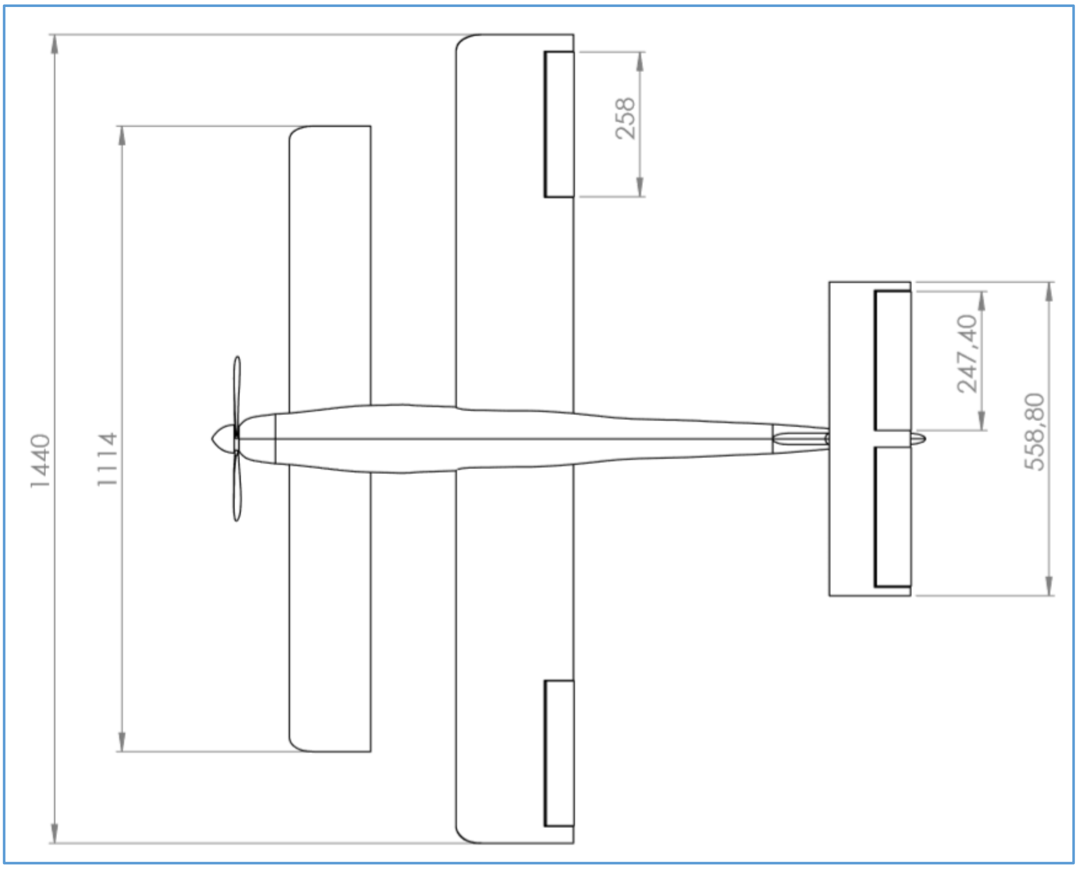

Figure 6: top view

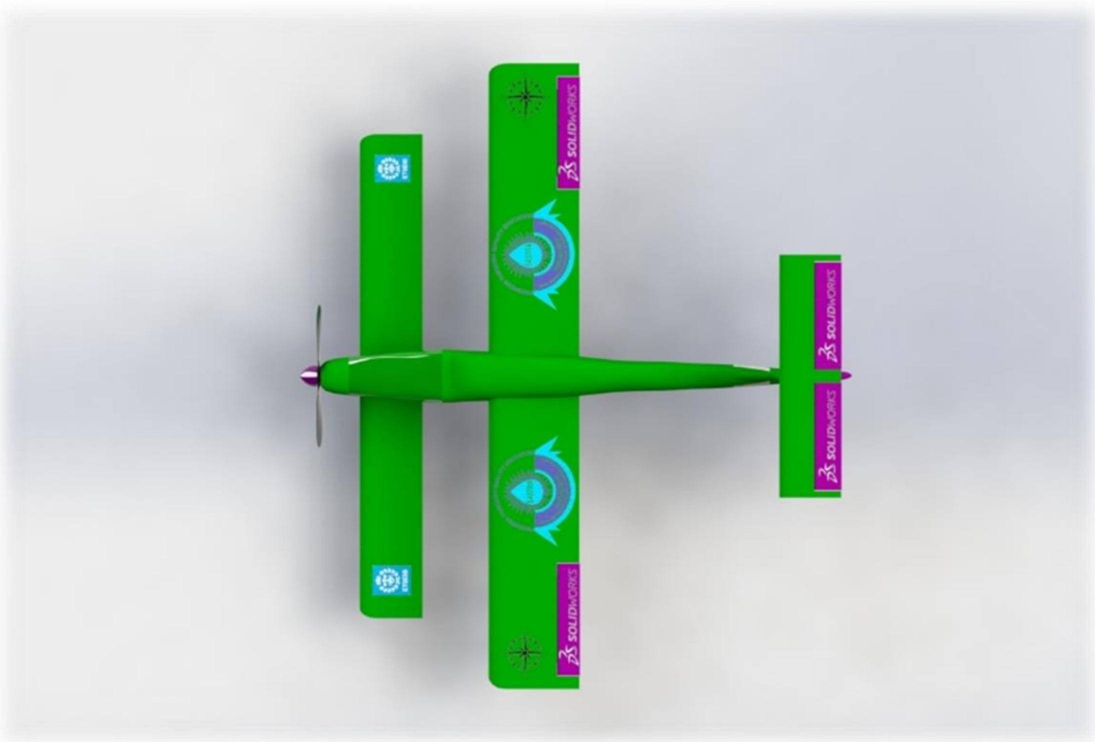

Figure 7: render top view

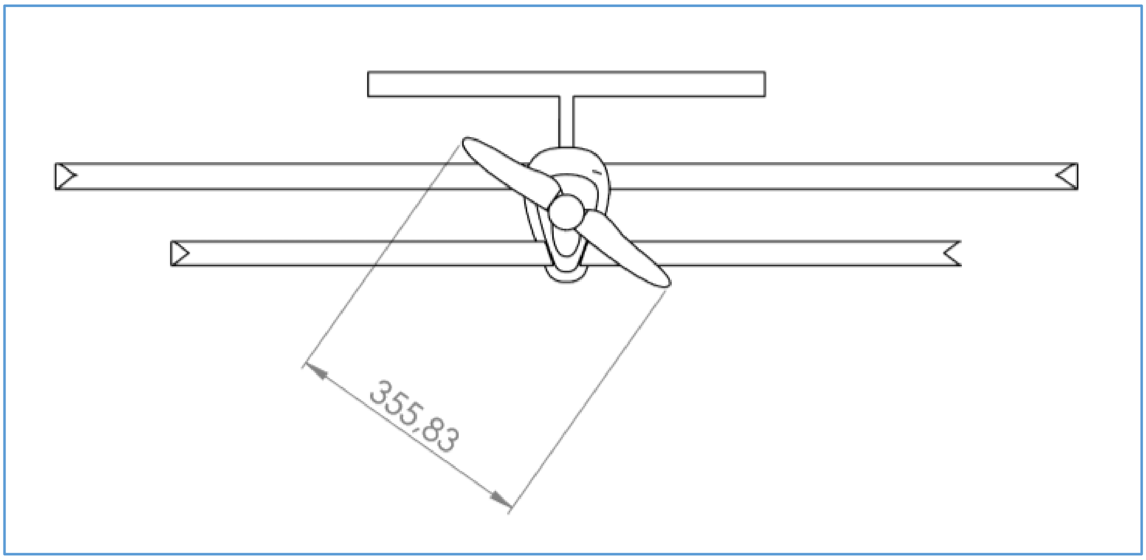

Figure 8: front view

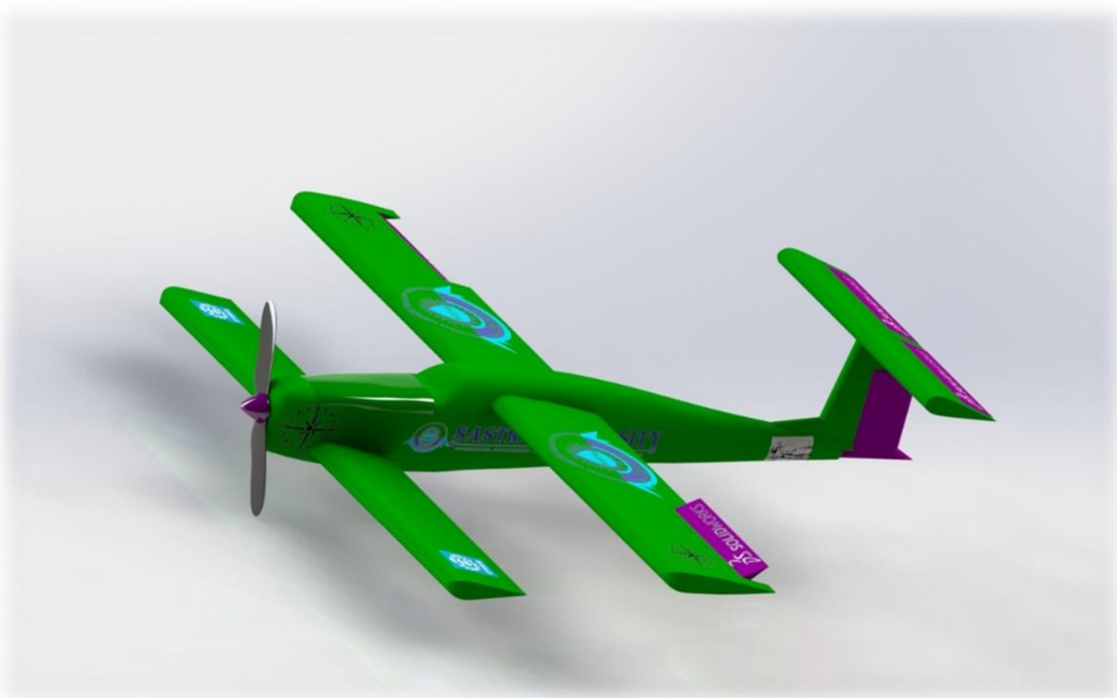

Figure 9: render isometric view

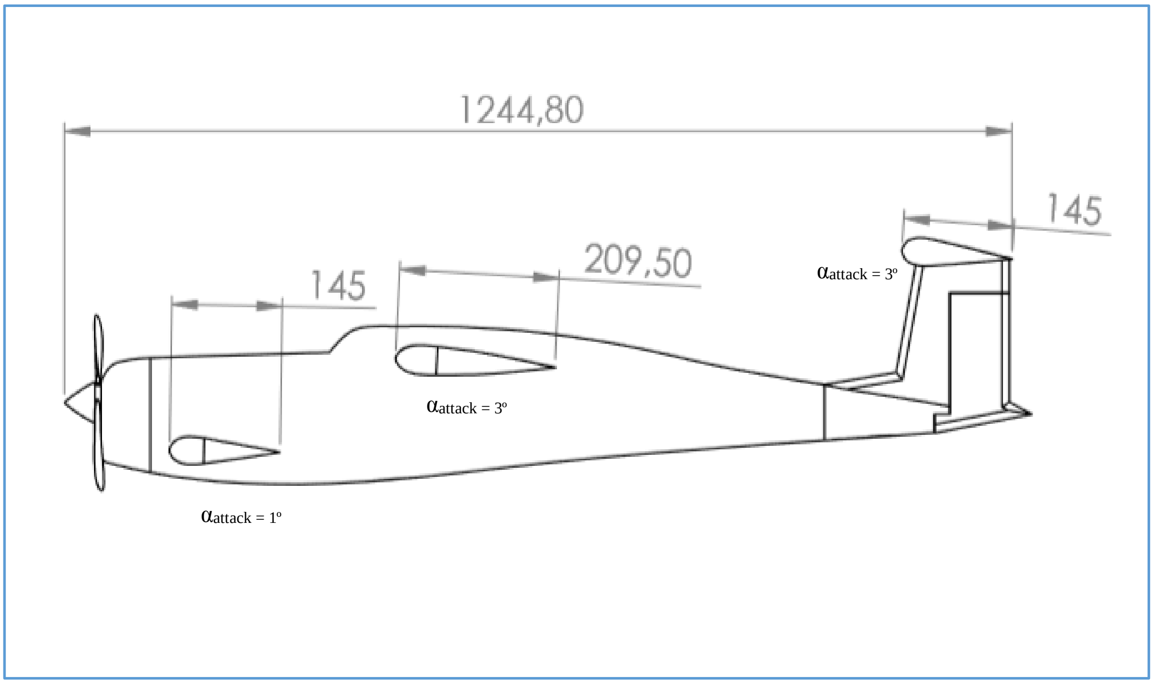

Figure 10: side view

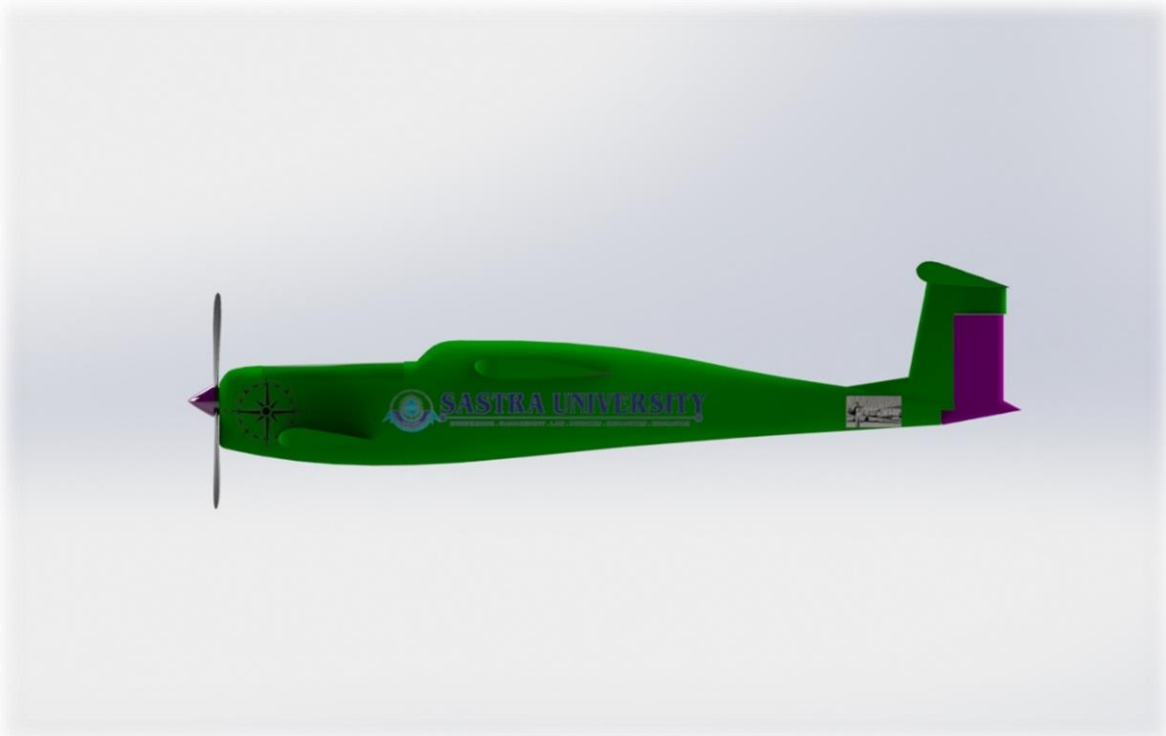

Figure 11: render side view

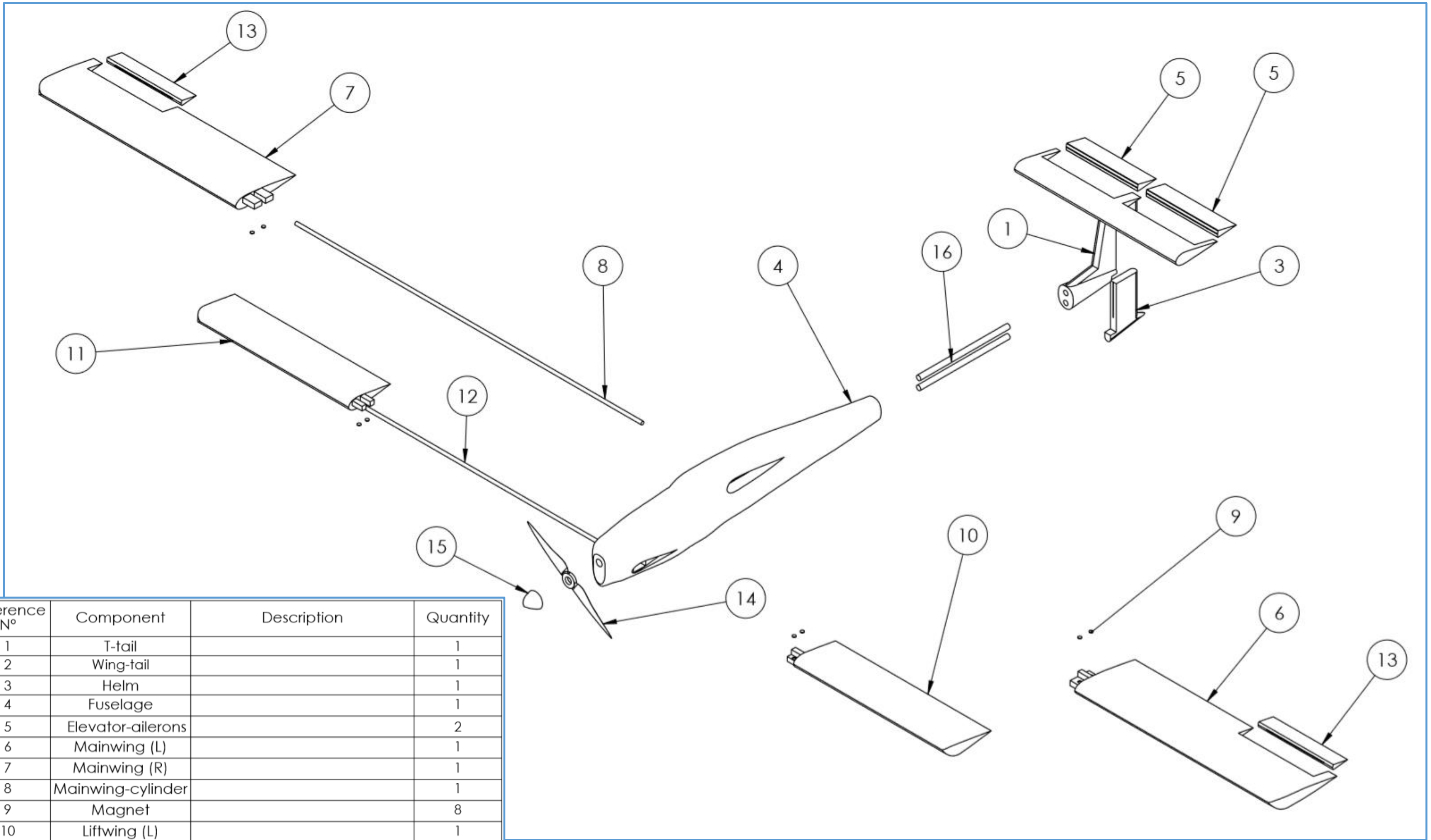

Reference Nº	Component	Description	Quantity
1	T-tail		1
2	Wing-tail		1
3	Helm		1
4	Fuselage		1
5	Elevator-ailerons		2
6	Mainwing (L)		1
7	Mainwing (R)		1
8	Mainwing-cylinder		1
9	Magnet		8
10	Liftwing (L)		1
11	Liftwing (R)		1
12	Liftwing-cylinder		1
13	Ailerons		2
14	Helix		1
15	Tip-Helix		1
16	Fuselage-cylinder		2

Figure 12: explosion view

2.1.2. Wings design

- **Lift wing:** The aim of this extra wing, as the name says is to increase the Lift, C_L. It is used in aircrafts which have a low α attack and therefore they need to provide more lift through an extra wing.
  The main aspect is that it has been designed a symmetric wing, that means there is no curvature (f=c). As far as symmetric design is concerned, it cannot be forgotten that this concept will bring stability to the aircraft and will simplify the manufacturing process.

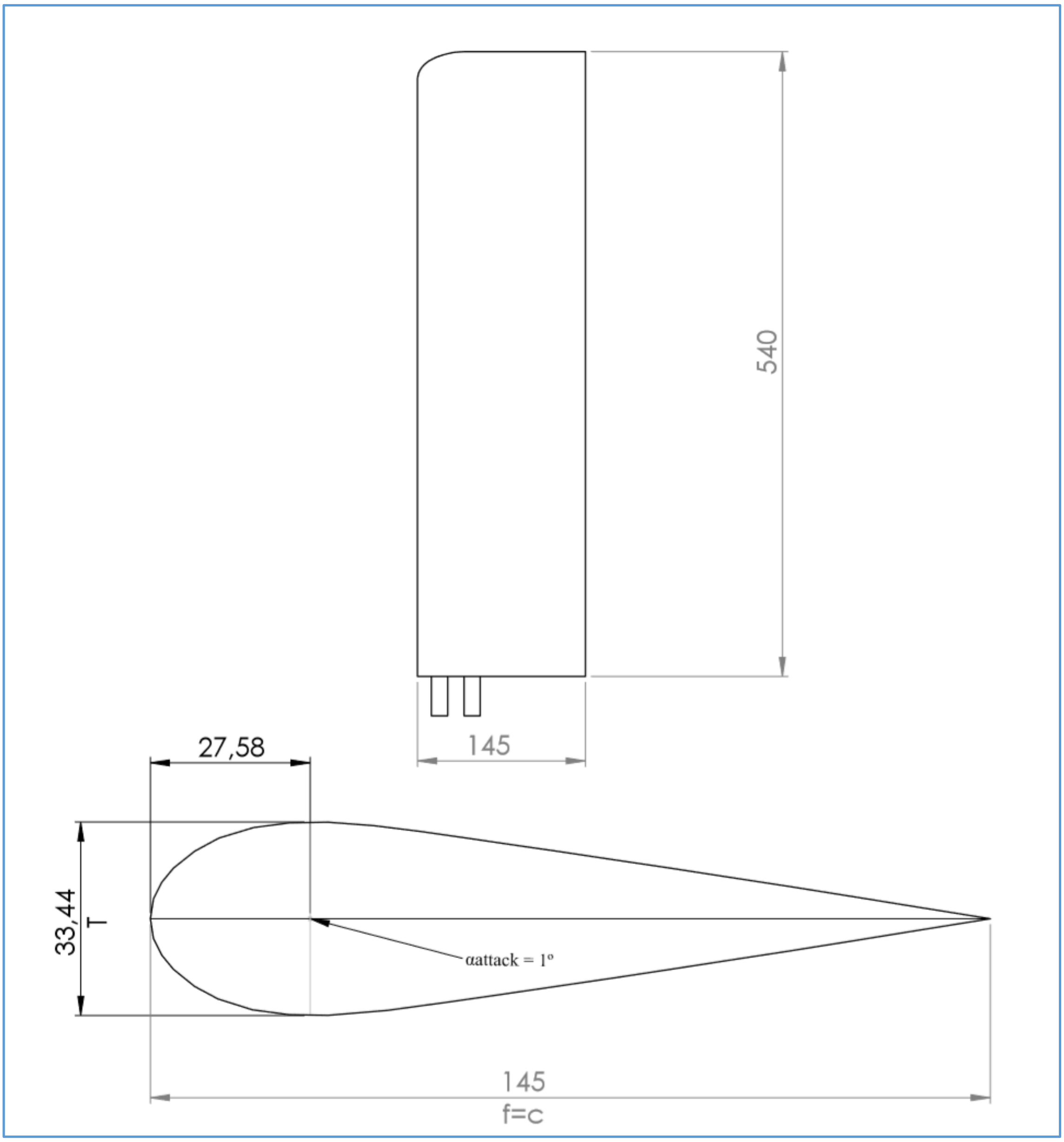

Figure 13: lift wing draw

➢ **Main wing**: The aim of the main wing design is to simplify the manufacturing process without losing aerodynamics benefits. Which is why it has been chosen a rectangular symmetric wing providing an α attack of 3 degrees. In further stages it will be accurately explained how wings are fixed to the fuselage, but just to clarify some aspects of the following main wing draw, it is going to use magnets and a T connection which it can be found on the wing lateral. As far as ailerons and flaps are concerned, wing will not be provided with flaps regarding flight conditions and aircraft mission. Obviously wing has been provided with ailerons, a normal configuration and dimension has been applied, length is 40% of 700 mm (wing length) and 25 % of 209.5 mm wide. This is a usual aileron configuration which can be found in a wide range of aircrafts.

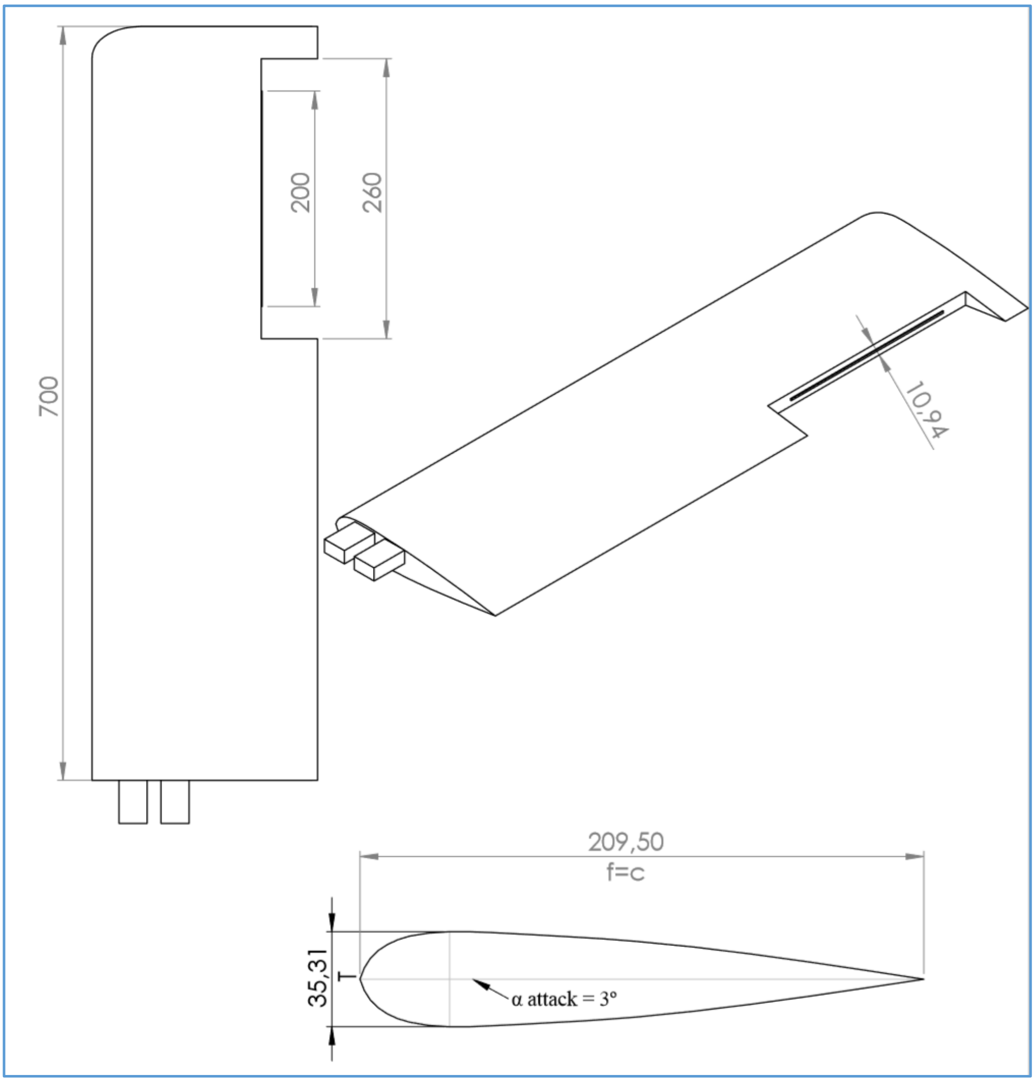

Figure 14: main wing draw

- **Tail wing:** This wing has two principle goals. First one consist on providing two ailerons which will be the responsible of permitting the aircraft increase or decrease altitude. Last but not least, provide more lift through a 3 degrees α attack.

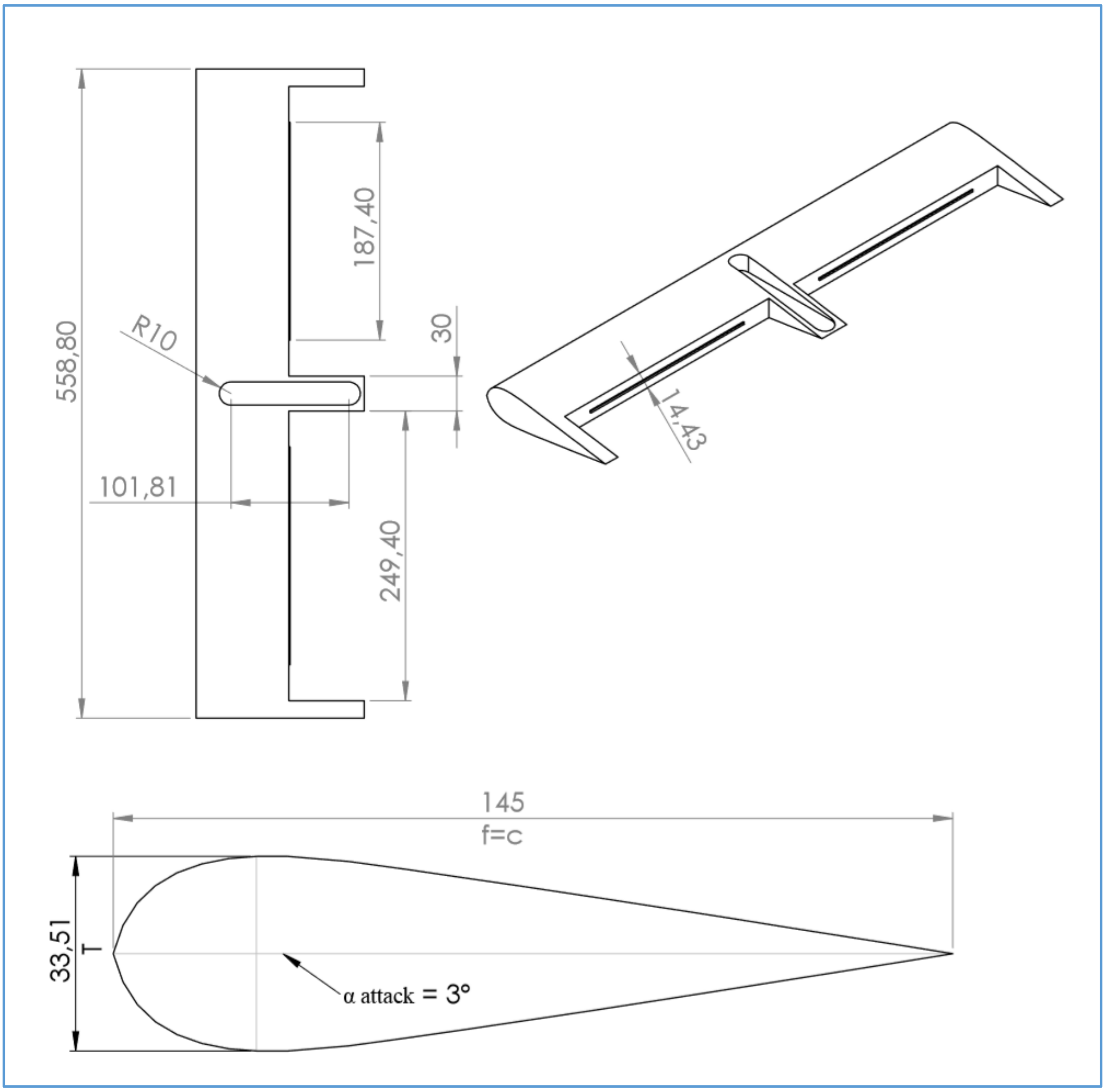

Figure 15: Tail wing draw

2.1.3. Fuselage

One of the most important and difficult parts of the design is the fuselage. It has been designed to have enough weight to give to the aircraft a solid structure and to withstand mountain winds. Also it is important to design an aerodynamic fuselage to decrease drag as much as possible.

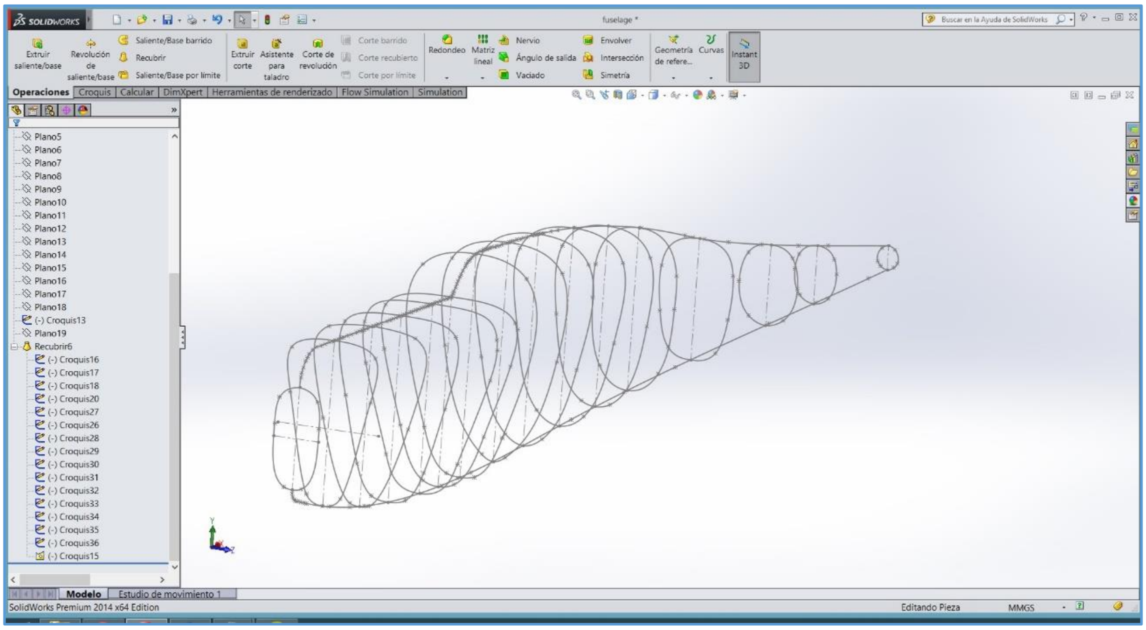

Figure 16: design process with SolidWorks software

As it can be shown on figure 16, fuselage design process is complicated, it has been used a plane by plane process which have been recovered across two guide lines.

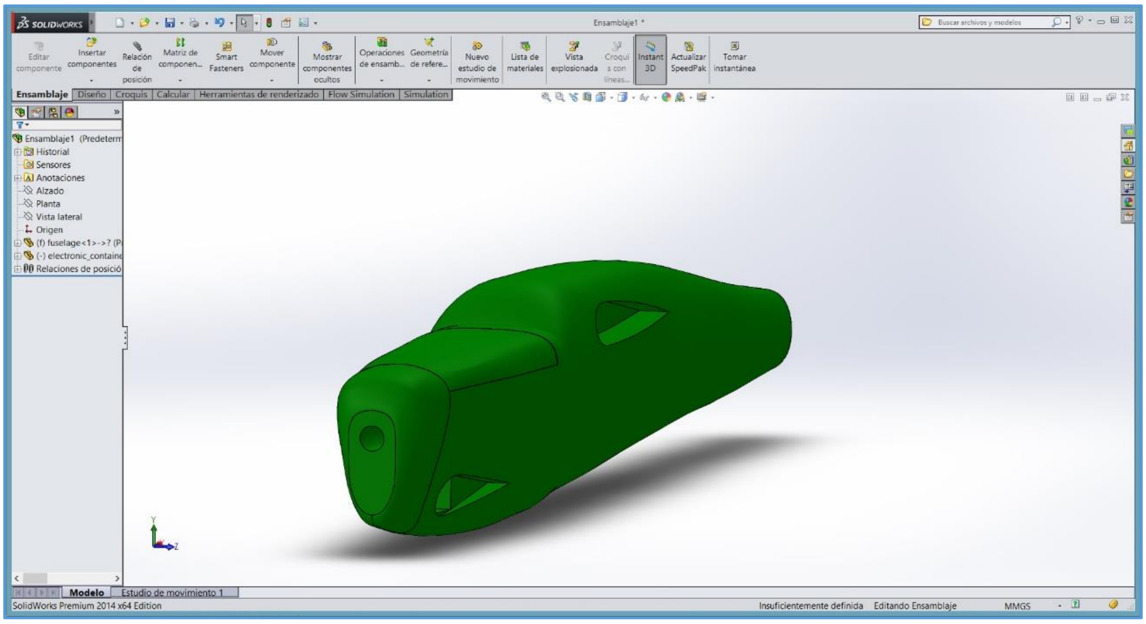

Figure 17: fuselage design

Reference N°	Component	DESCRIPTION	QUANTITY
1	Electronic_container		1
2	Main wing hole		1
3	Fuselage		1
4	Lift wing hole		1
5	T-tail connection		1
6	Cylender_holes		2

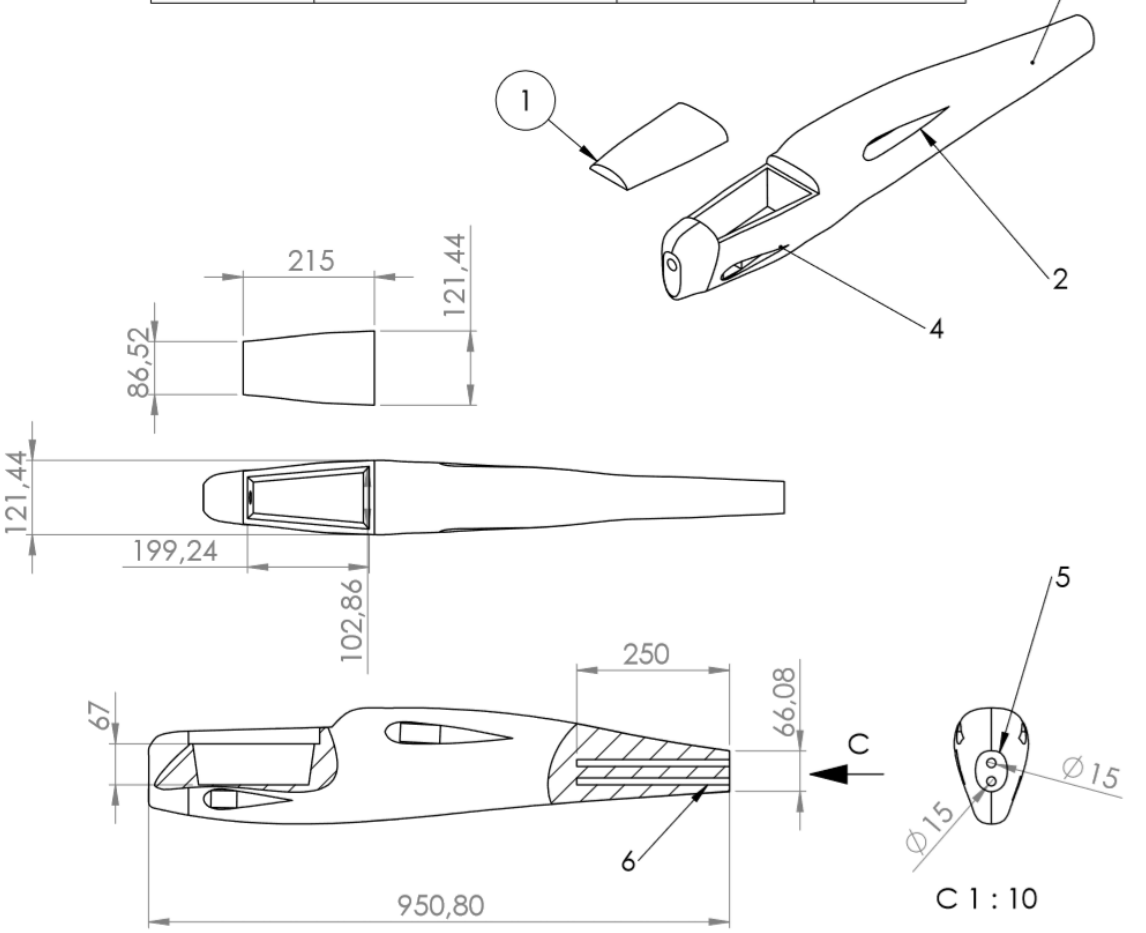

Figure 18: fuselage draw

2.1.4. T-tail

Tail design is also one of the most important parts of the aircraft. It has been chosen a T-tail design as a consequence of the same concept it has been mentioned, lift increase. This part of the plane includes elevation ailerons and the helm.

REFERENCE Nº	COMPONENT	DESCRIPTION	QUANTITY
1	T-tail		1
2	Tail-wing		1
3	Aleirons		2
4	Helm		1

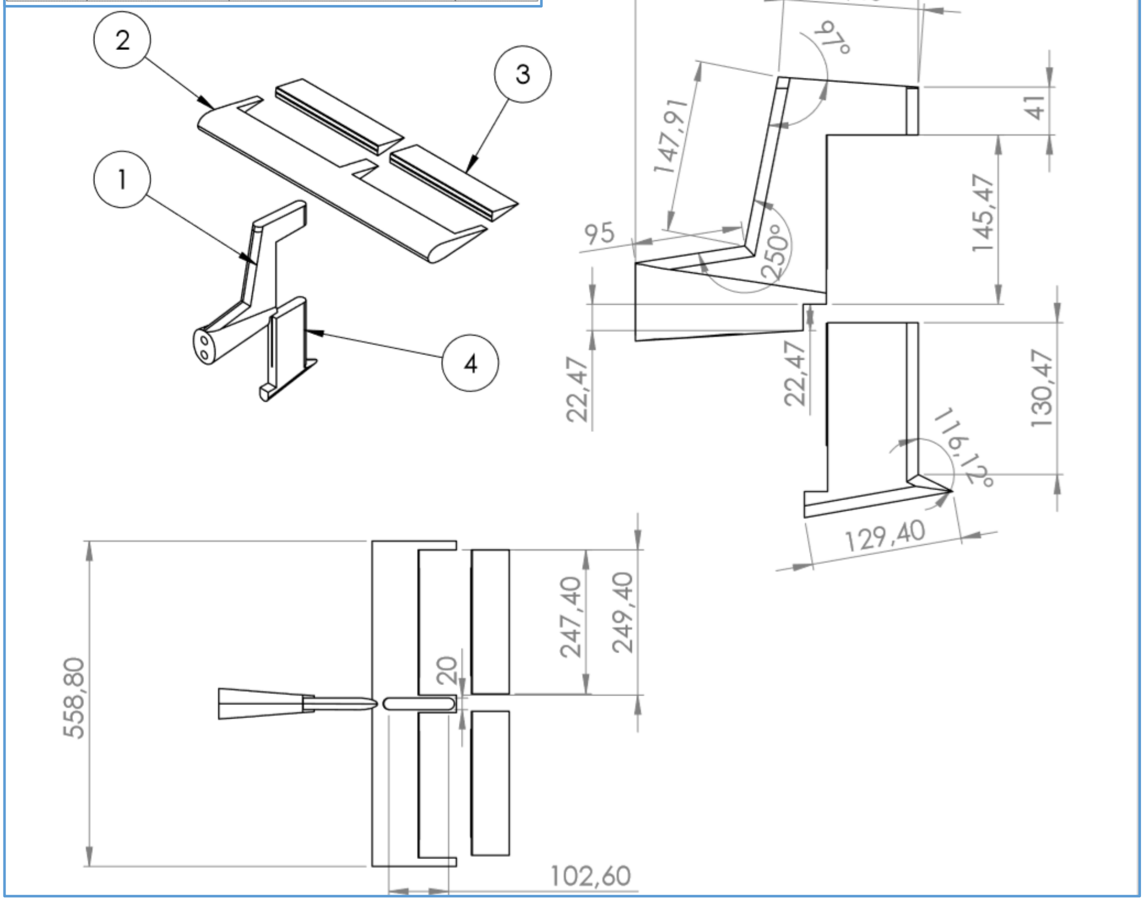

Figure 19: T-tail draw

2.1.5. Helix

The aircraft will have helix propulsion provided by an engine and helix. Both components will not be manufactured by the research team, will be bought at a specialized RC shop. However, it has been drawn a similar helix due to it was needed to perform the aerodynamic studies.

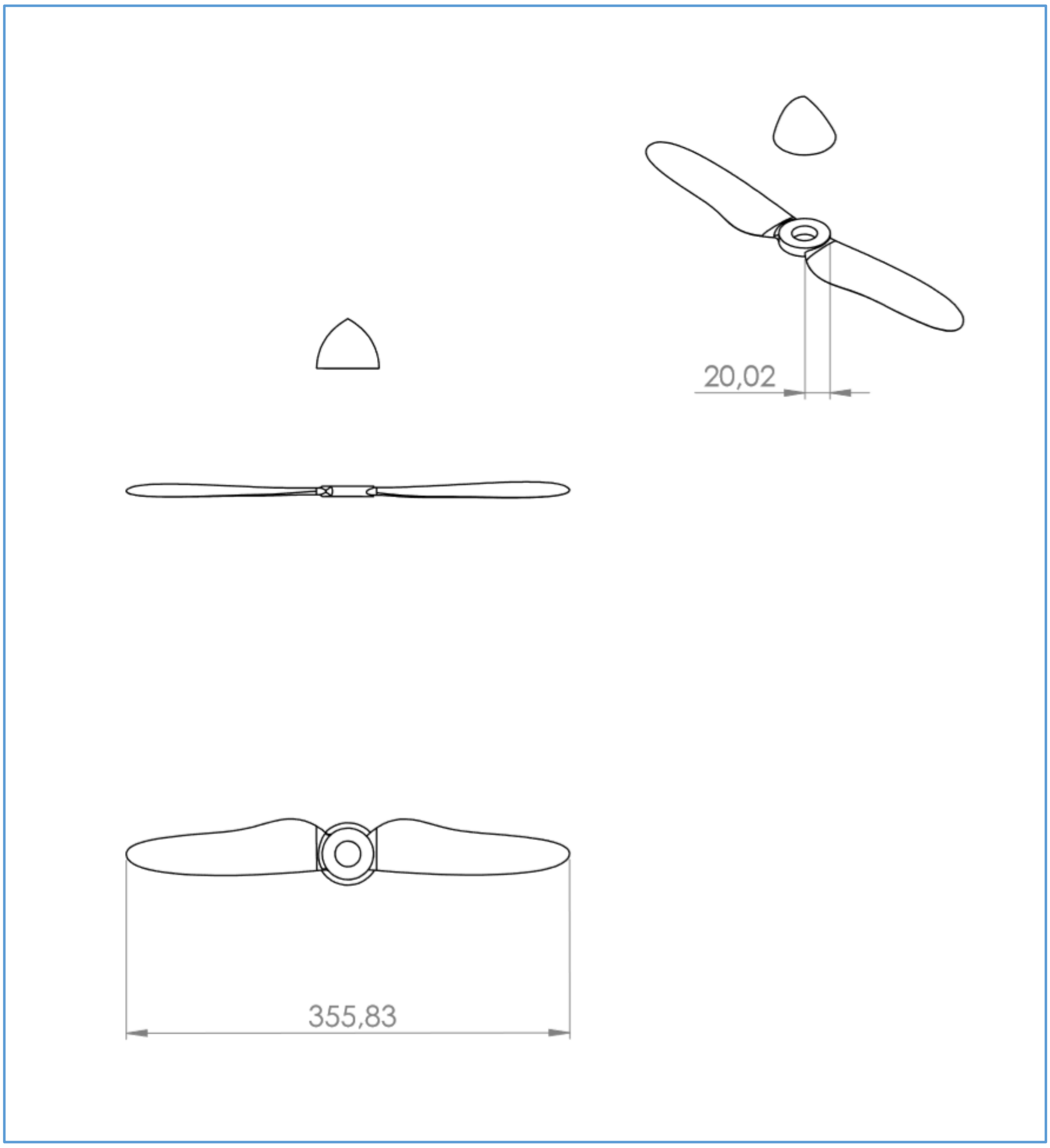

Figure 20: helix draw

2.1.6. Sticks

To provide more stiffness to the aircraft, it is going to be installed several sticks, two on the fuselage and one on each wing which also will help to connect every wing to the fuselage.

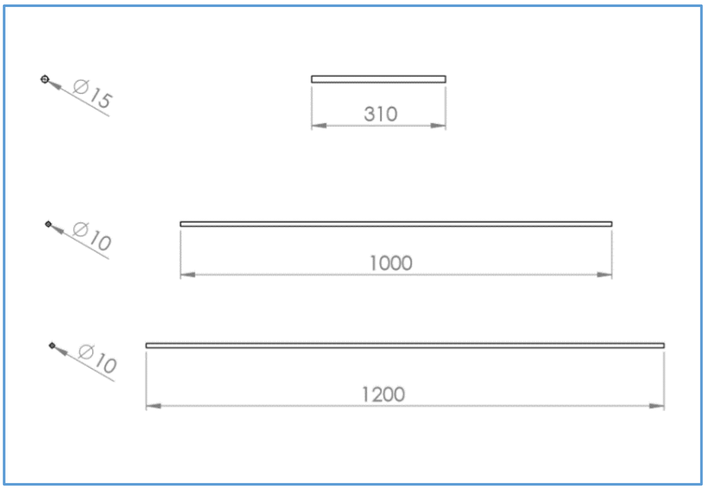

Figure 21: fuselage stick, lift wing stick and main wing stick (in order)

2.2. Weight estimation and gravity center

2.2.1. Weight estimation

To estimate the exact weight of the aircraft it is going to be used the following formula:

$M_{TO} = M_{ST} + M_{P} + M_{OI} + M_{EB}$

I. **M_{ST} (total aircraft structure mass):** one of the several advantages of software CAD designing is that it is able to calculate the exact mass of the plane, just is needed to indicate the exact characteristics of the material. In that case, is EPO FOAM with a density of 30 kg/m3. Software will take also into consideration the empty mass.

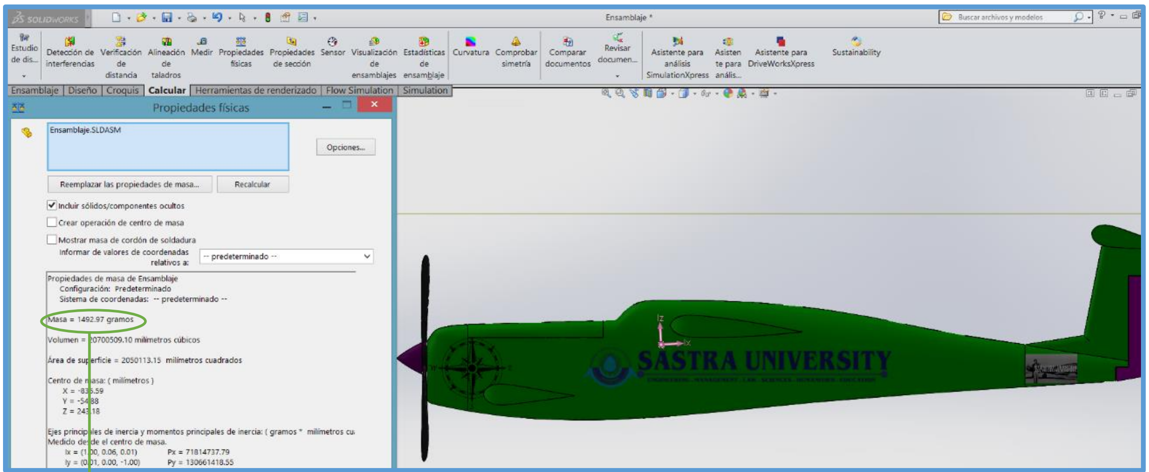

M_{ST} = 1492.97 g

Figure 22: Mst calculation

II. **M_P (propulsion mass):** in that case, calculation of propulsion system mass is really simple due to it is going to be installed a previous designed electric engine, a Scorpion HK-2206-3900kv Brushless Outrunner . So if engine, cylinder and helix are taken into consideration, the amount of weight of the propulsion system is **130g**.

III. **M_{OI} (operational items mass):** as propulsion mass, it is going to be incorporated items that already are designed and tested, which is why it can be obtained the exact mass of every component. On the following table it is pointed out each mass of each component:

Item	Weight (g)
Thermal camera	150
Vision camera	83
Frequency transmitter	350
Arduino autonomous flight system	60
Servos (9 g)	6 * 9 = 45
M_{OI}	**688**

Table 6: Operational items weight estimation

IV. **M_{EB} (energy batteries mass):** to ensure that at least the aircraft can fly autonomously during 20 minutes, it is needed three Zippy Compact 2200 mAh 3S 25C Lipo Pack. One battery will supply energy to the engine and the S.BUS mechanical system (page 36). Another battery will supply the vision and thermal camera and the last battery will supply the frequency transmitter and the Arduino autonomous flight system.

Every battery weights 163 grams, so the total weight amount is **489 g**.

V. **TOTAL AICRAFT WEIGHT:** The total weight of the aircraft would be:

$M_{TO} = M_{ST} + M_P + M_{OI} + M_{EB} = 1492.97 + 130 + 688 + 489 = 2799.97 \approx 2800$ g

$F_w = 2.8$ Kg $\cdot$ 9.8 m/s^2 $= 27.4$ N

2.2.2. Gravity center

Not only it is important to determinate the amount of mass but also how this mass is distributed. Gravity center plays a main role concerning aircraft stability and flight performance. Drone has been designed to be perfectly symmetric and moreover to achieve a gravity center on the front of the aircraft. The next figure shows theoretically the stability of a RC model depending on the location of the CG.

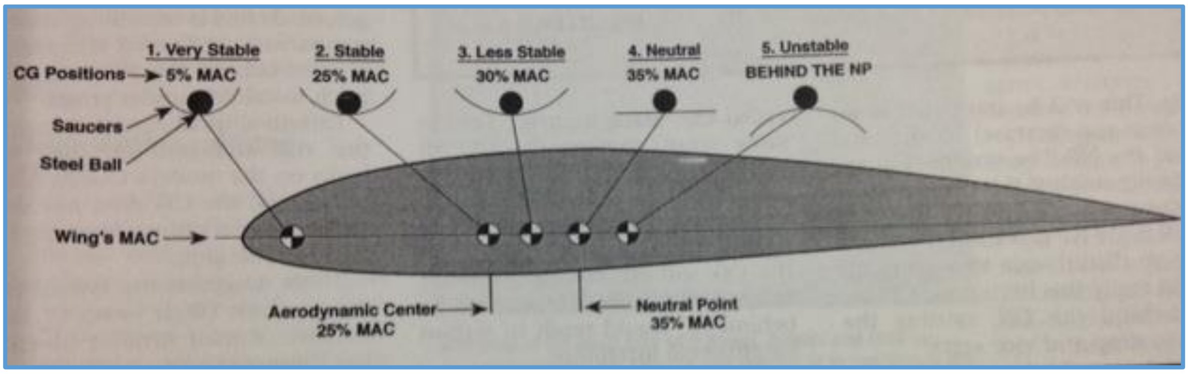

Figure 23: CG position depending on stability

As it can be seen, CG position should be on the fron part of the aircraft to obtain stability. If the CG is located in a position which leads to a poor stability, the whole aircraft design should be changed and modified with the aim of locate the CG on the front. After all systems are incorporated on the RC model, the CAD software is able to calculated automatically the CG position.

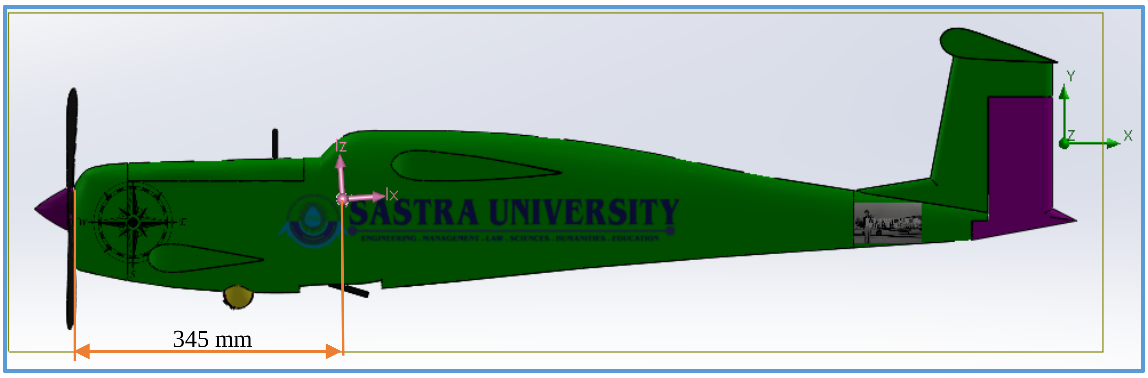

Figure 24: RC model CG position

The total length of the aircraft is exactly 1244.8 mm.

$\frac{345\ mm}{1244.8\ mm} \times 100 = 27,7\ \%$ ⟶ Regarding figure 23, CG is in position 2: stable

It can be affirmed that the design of the CG is correct and suitable.

2.3.Aerodynamic estimations

There are several methods for obtaining aerodynamic estimations, on this case it is going to be used an aerodynamic software due to at this stage of the design every single aircraft piece has been designed with a CAD software called SolidWorks. This software, also provides a reliable flow simulation which is going to calculate all the rates and estimations needed to perform and ensure that aircraft has been designed properly. Solidworks flow simulation works with finite element method, so one of the important things is to design an accurate mesh.

But previously, the important question that should be needed to answer is; what it should be calculated?

Answer is simple, the aim of this aerodynamic estimations it is not to provide a full study of aerodynamic methods, to be practical it is just important to calculate a few parameters to ensure that aircraft will have a good performance on the real flight. These parameters are the following:

- Drag rate
- Lift rate
- Velocity and pressure isosurfaces and flow trajectories

Those parameters are going to be calculated running a simulation with the worst conditions aircraft should overcome. The following conditions are:

- Air velocity: 40 m/s
- Mach number: < 0,8 subsonic regime
- Pressure: 65861 Pa
- Density: 0,8575 kg / m^3

All this conditions, parameters and goals has been settled on the software and after 471 iterations solution has been achieved.

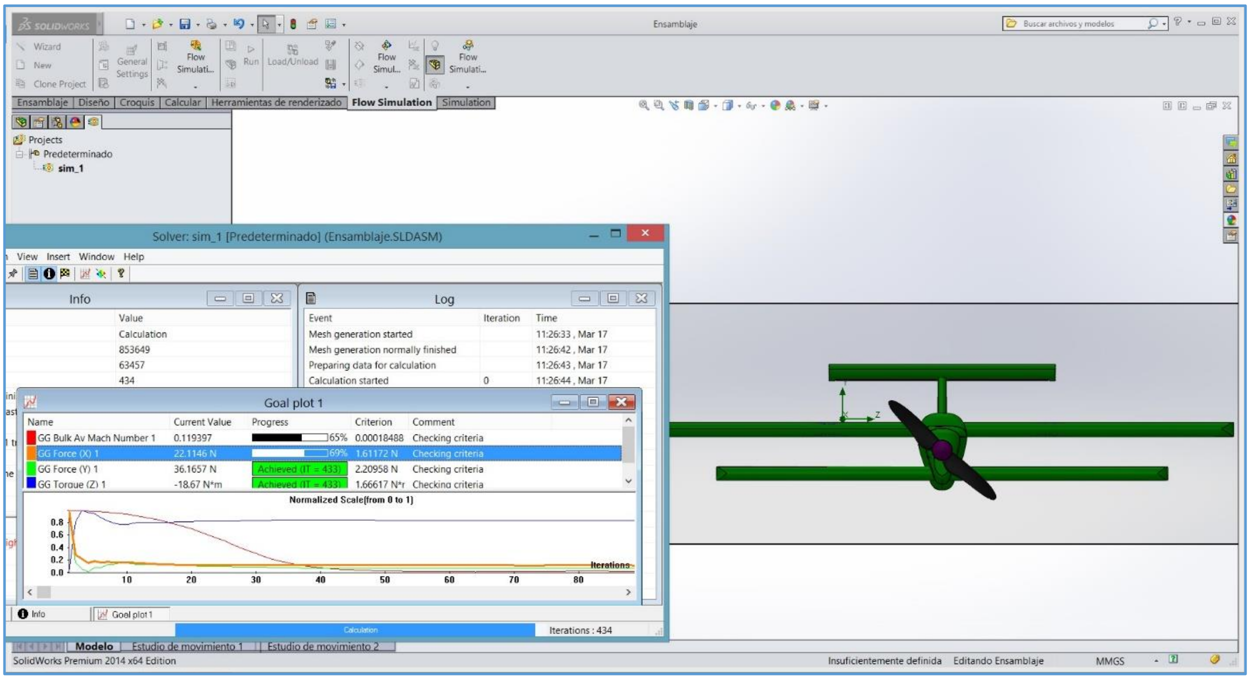

Figure 25: calculation process by Solidworks

The main results are presented on the next figure:

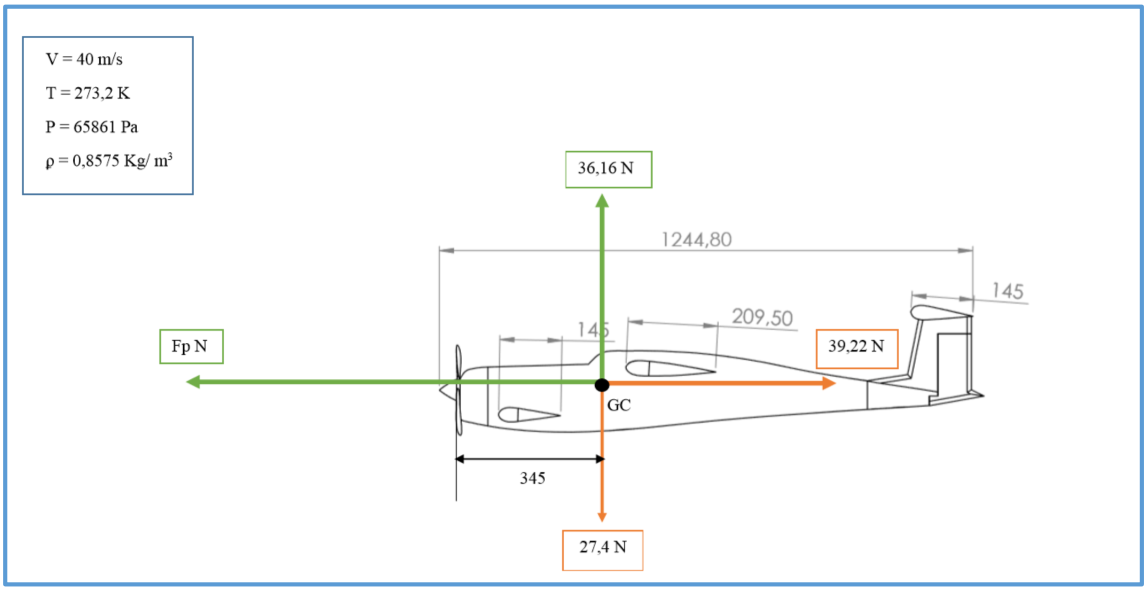

Figure 26: lift and drag results (measures in millimeters)

This figure shows several results which are important to highline:

- ✓ Lift force > weight force
- ✓ Drag force is not even critical despite the test was settled up with the worst conditions which is why air velocity was fixed towards 40 m/s.
- ✓ Center of gravity is perfectly located to provide a good stability to the aircraft.

Moreover, it is also worth to calculate C_D, $C_{L,}$ m_{ca} and E. The formulas are:

- $F_D = 0,5 \cdot \rho \cdot v^2 \cdot C_D \cdot A$
- $F_L = 0,5 \cdot \rho \cdot v^2 \cdot C_L \cdot A$
- $M_{ca} = 0,5 \cdot \rho \cdot v^2 \cdot C_{ca} \cdot A^2$
- $E = F_L / F_D$

The aim of any aircraft designer is to decrease F_D rate and increase the rate $F_{L.}$ So, how can it be increased or decreased? The next parameter on the formula: $0,5 \cdot \rho \cdot v^2$=cte it will be always a constant when the experimental conditions are fixed. That leads to focus on $C_D \cdot A$ and $C_L \cdot A$. Concerning F_D, the parameter $C_D \cdot A$ should be as low as possible and on the other hand, parameter $C_L \cdot A$ should be as high as possible on the case of $F_{L.}$ To sum up, playing with these two parameters, $C_D \cdot A$ and $C_L \cdot A$, will allow the designer to obtain the suitable F_D and F_L needed.

It is important also to determinate the parameter E, aerodynamic efficiency, and m_{ca}, the moment towards the gravity center.

In this case, it has obtained:

- $F_D = 39,22$ N ⟶ $C_D = 0,45$, $A = 0,127$ m^2 ⟶ $C_D \cdot A = 0,0572$
- $F_L = 36,16$ N ⟶ $C_L = 0,033$, $A = 1,6$ m^2 ⟶ $C_L \cdot A = 0,0528$
- $E = F_L / F_D = 1,084$
- $M_{ca} = 18,64$ N·m

So at a first stage, the aerodynamic results are quite satisfactory. It is also important to simulate how the air is going to pass through the aircraft and which are going to be the critical points in terms of high air speed and high air pressure. The following figures explain and represent these concepts. Simulation conditions are 30 m/s, 293,2 K and 101325 Pa.

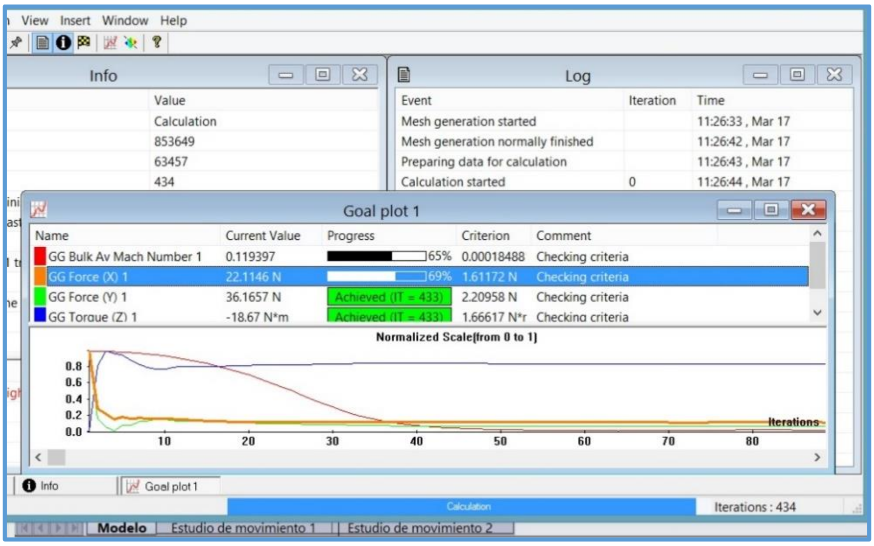

Figure 27: iteration plot

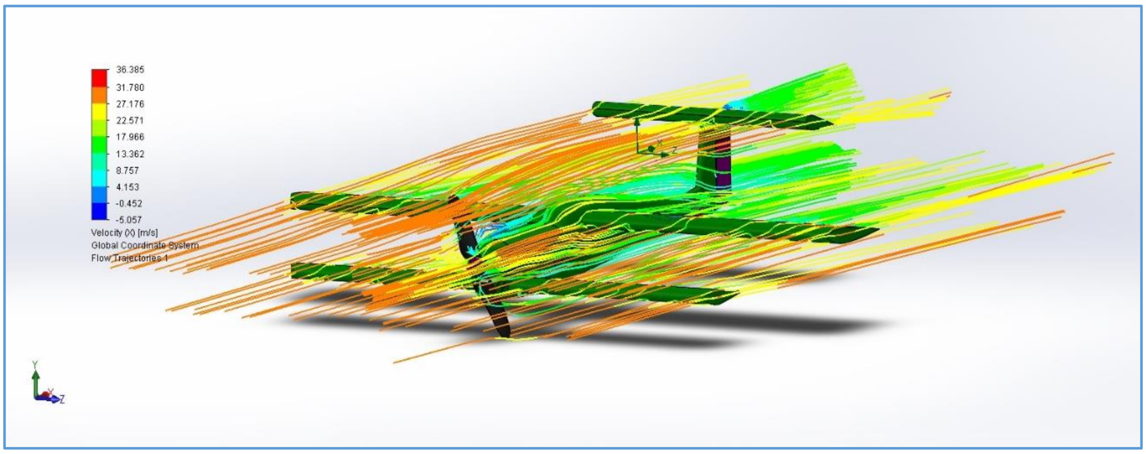

Figure 28: air flow (m/s) isometric view

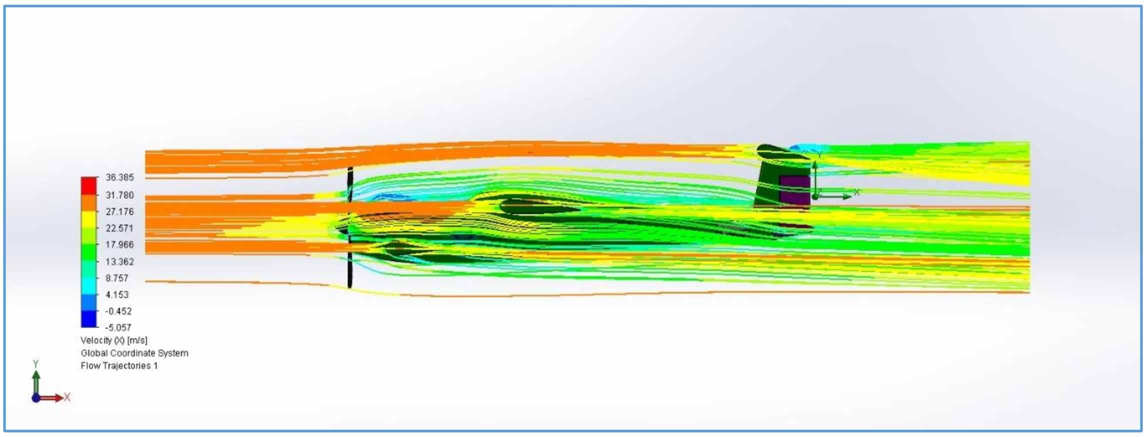

Figure 29: air flow (m/s) side view

The two figures below shows how air is passing through the aircraft. It cannot be appreciated any irregular flow at any point and also there is not critical low speed air rates. That results means that aircraft should fly gentle on the air.

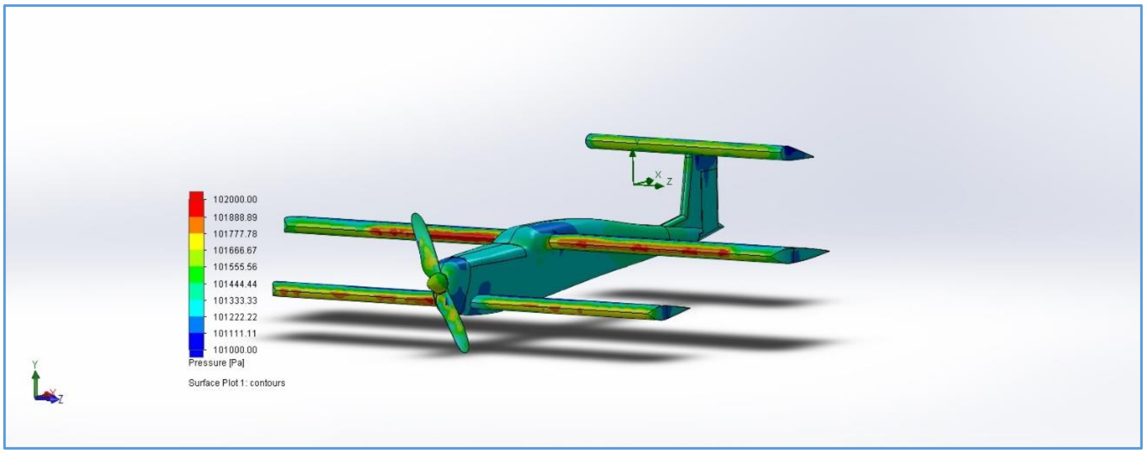

Figure 30: pressure surface (PA), isometric view

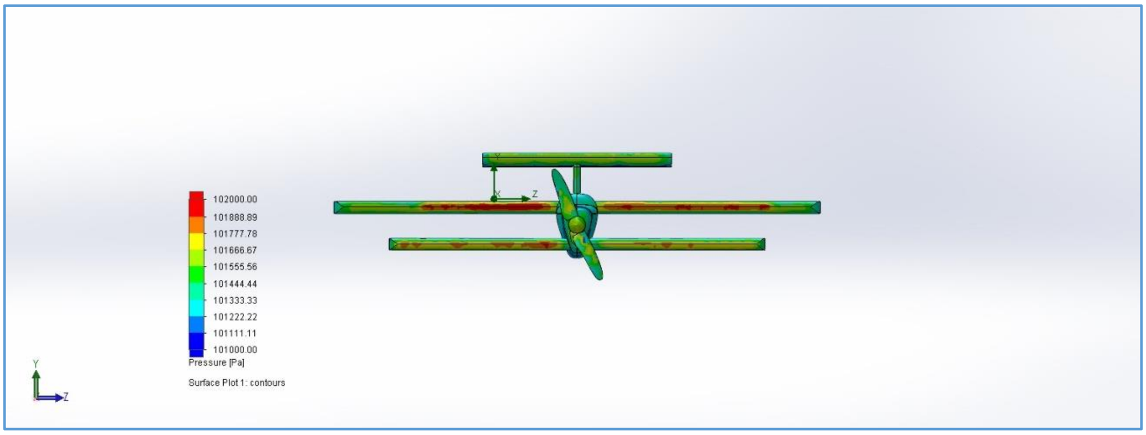

Figure 31: pressure surface (PA), frontal view

Figure 30 and 31 show the pressure on each point of the plane. Blue surfaces are the ones who have a low pressure whereas red surfaces indicates high pressure. It is reasonable that front side have the highest pressure due to the air frontal hit, this face should be the strongest one to withstand high pressure. However, red pressure is rated towards 102000 Pa, not even critical.

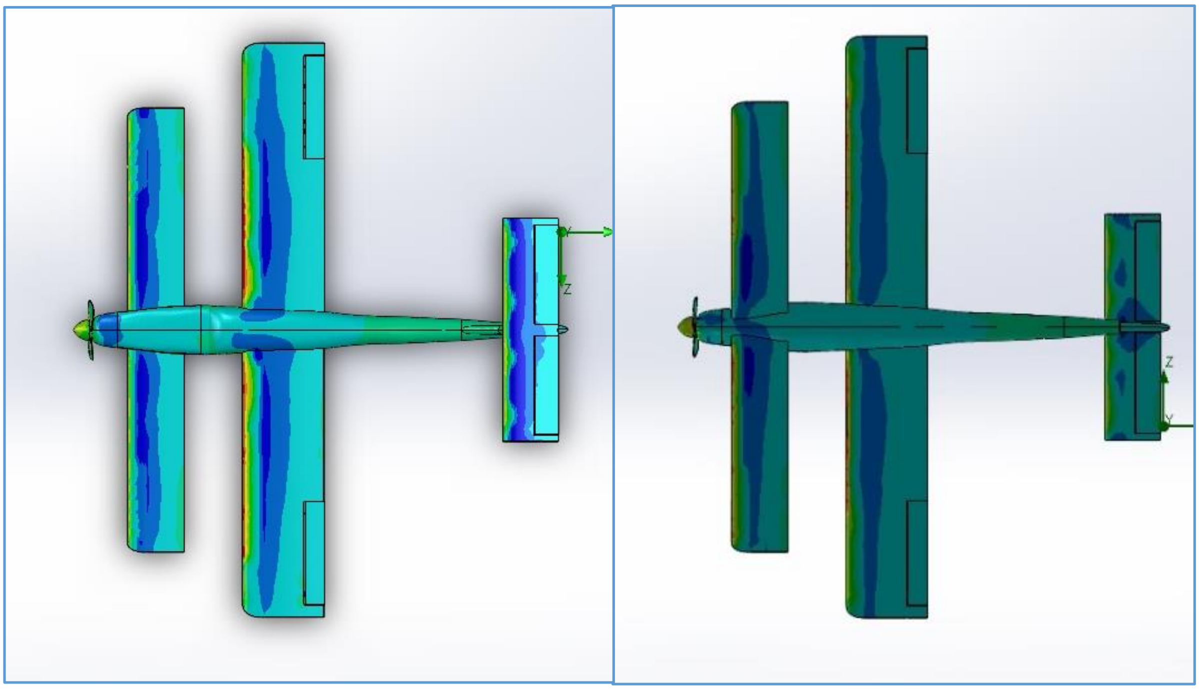

Figure 32: pressure surface on top view (left image) and under view (right image)

Previous figure shows a pressure surface comparative between under view and top view. As the figure indicates, it can be observed that pressure is lower on top of the aircraft. That confirms aircraft would have a positive lift on real air conditions.

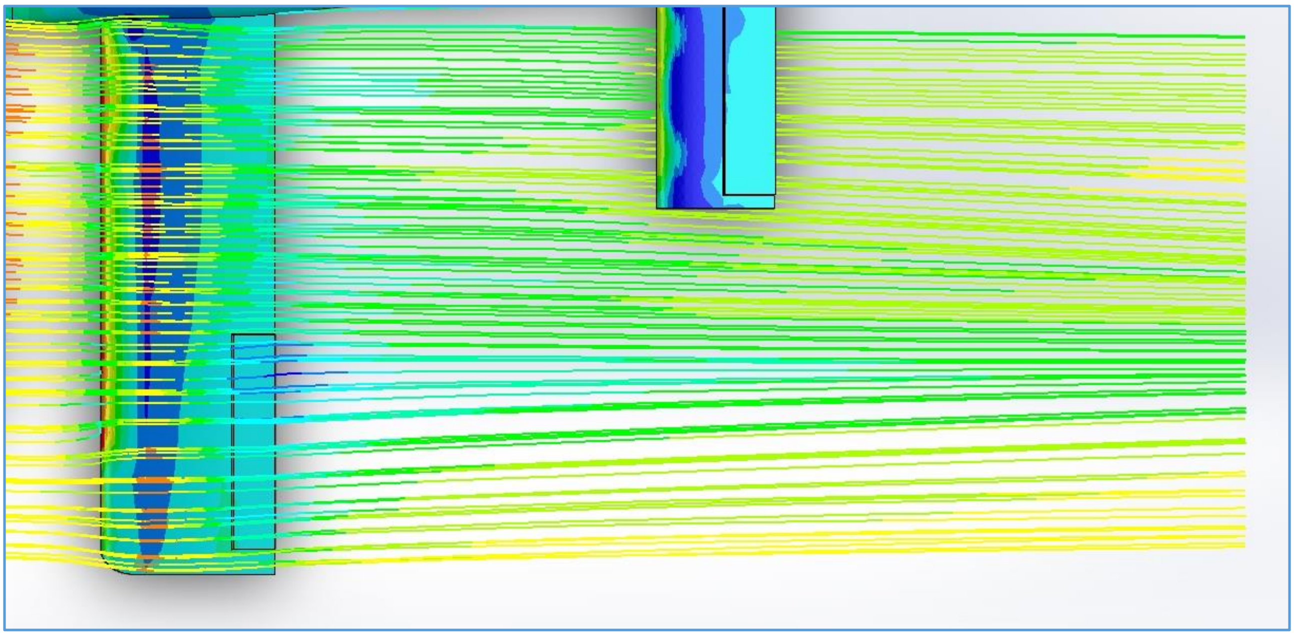

Figure 33: velocity against pressure (main wing)

Figure 33 is just confirming theoretical aerodynamics, it can be observed that pressure is indirectly proportional to velocity which is why when the velocity line is red, indicating high velocity, the surface color is blue, indicating low pressure.

$$\rho \times u \cdot du = -dp$$

It has been proved on the aerodynamic simulation that aircraft will have a satisfactory performance, aerodynamic simulations can go deeper but it is not the main goal of this project, it has been done enough to ensure the great performance of the aircraft.

2.4. Mechanical systems

The only mechanical system is going to be implemented is the one which will allow movement on ailerons, helm and elevators which will give to the aircraft the three rotations axis (x,y and z). Mechanical system must be really reliable, otherwise aircraft can face serious problems during the fly. Despite of the importance of a reliable performance, the mechanical system is quite simple. In fact, there is only one component which will be implemented on the hardware, it is called servo. It is a really common component on every mechanical system.

Figure 34: servo

Figure 34 is just an example of a wide range of servos. Every aileron, helm and elevator is going to be controlled by a servo, which is why aircraft will have 5 servos.

Every servo is controlled by a channel on the RC transmitter. That means transmitter should have at least 5 channels or more. How the servos are going to be connected? There is a new system which allows to control up to 16 servos only with one cable. That is a brilliant system due to simplifies setup and at the same time gives more programming power. The company which has developed S.BUS system is called Futaba.

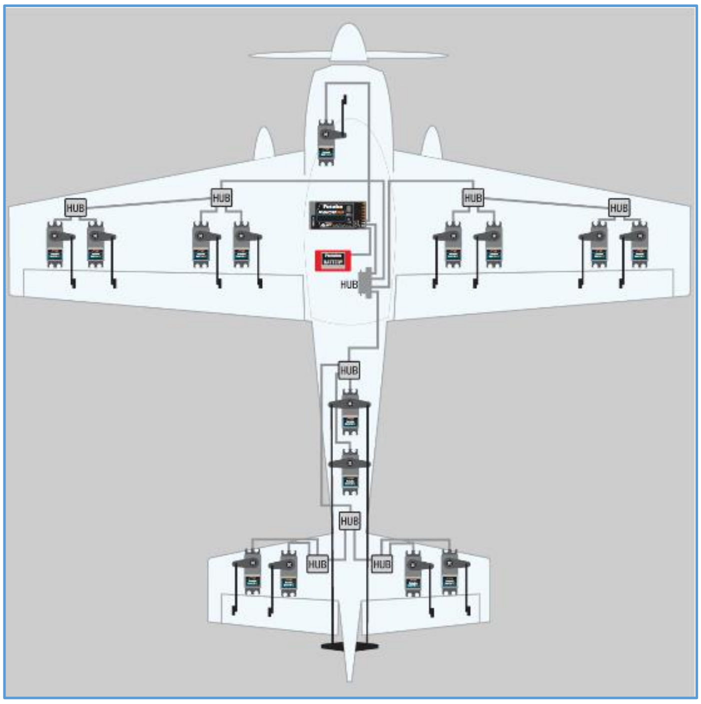

Figure 35: S.BUS system

Figure 35 is an example of how can be the installations of servos using S.BUS system. Practical, simple and reliable. It is advisable that servos should be digital to a better and faster performance of the system.

3. Special aircraft systems

It cannot be forgotten which is the current main aircraft function, as it has been explained on the introduction, UAV has to be able to find, detect and send the exact position of people who has been injured or lost on the mountains. Which is why, not only aircraft must fly properly but also must be able to carry on search and transmission operations. For this reason, some special systems are going to be installed on the RC model. That is what this chapter is going to bring out.

3.1. Thermal camera and frequency transmitter

These two instruments are going to be the main operational systems which will provide the possibility of search and locate lost or injured targets. After the detailed explanation of both components it will be possible to understand why it is important the combination of both systems.

- **Thermal camera:** the purpose of installing a thermal camera on the aircraft is because it is a well-known way to search and locate targets, especially in wild environments where it can be a lack of light and visibility. It is important to remember that one of the main objectives of the UAV is the ability to search and locate targets at any time or weather condition, like at night, raining days or even flog days. The purpose of the camera is to give 100% of visibility no matter what conditions the aircraft is facing.

Human body temperature and shape is very characteristic and different from others wild elements, it will be relatively easy for the software to locate and identify a human being in such atmosphere. Moreover there is a huge backup due to an uncountable field applications like security; to protect governmental buildings or country borders, or rescue; to protect wild life by monitoring animals or to determinate possible fires on the forest. Those are just a couple of field examples of many more.

Figure 36: wild life monitoring

Figure 36 shows how it will be seen an animal in the middle of nature with such a great resolution. However resolution and other many technic characteristics will depend on the model, there are a wide range of thermal cameras to choose according the purpose for what is it going to be used.

Figure 37: Garmin thermal camera

For the purpose of this project, the main aspects which are needed are the following:

A. High resolution and zoom
B. 360 degrees operational range
C. Rang of function temperature: [-30 ºC to 30 ºC]
D. Software modification and configuration

It is also important to be aware of the weak points and possible issues that the system will bring. For example in terms of software design, a complex one will be needed to connect the thermal camera with the "brain" of the aircraft, automatic target recognition and exact coordinates location sending to the rescue team is one of the main and important aspects of the project and that will imply thermal camera software modification which technical and complex knowledge will be needed.

The effectiveness of the thermal camera regarding search operations in some aspects can be compromised by several natural conditions. For example if the target is under snow or ice it will be almost impossible to identify the body only with a thermal camera. Also if target wears a thermal blanket it will be difficult to identify it. That last weak point leads to a second special system which will be installed on the aircraft, a frequency transmitter will solve this problem and enhance the target location probability.

- **Frequency transmitter:** a company called "RECCO®" has developed a security system which consist in (explanation provided by RECCO®) :

  I. **Two-part technology:** The RECCO Rescue System is two-part technology. Ski resorts and mountain rescue teams carry RECCO detectors, which send out a search signal. RECCO reflectors worn by skiers, riders and other outdoors people, bounce back a directional signal that directs the rescuer straight to the reflector. Unlike other technologies, multiple RECCO reflectors on a person can improve detection.

  II. **Sophisticated radar technology:** The RECCO Rescue System is sophisticated radar technology, but for the end user it is easy to use. Organized rescue teams can use the lightweight hand-held detector on the ground or from a helicopter, or drone, which allows for a fast searching of large or dangerous areas. Skiers and riders are equipped with RECCO reflectors that need no attention or effort. The only requirement is that skiers, riders and mountaineers make good decisions to avoid avalanches and other mountain dangers.

III. **The RECCO reflector provides a second chance:** RECCO reflectors do not prevent avalanches, nor do they guarantee location or survival of a buried or lost person. Reflectors are also not a substitute for an avalanche recue beacon. However, when someone needs more helps than their friends can provide, RECCO reflectors provide another chance.

The RECCO system is going to be helpful especially in winter, when there is high avalanches probability where people can be buried. It is important to take into consideration that this system is only effective if mountaineers carry the RECCO reflector. There are a wide range of brands which have incorporated RECCO system in its products like helmets, boots, anorak…

Figure 38: RECCO system

Figure 39: RECCO reflector

Figure 40: RECCO transmitter

Figure 41: signal diagram RECCO system

To sum up, both systems, thermal camera and RECCO transmitter, figure 34 and 37, are going to be installed on the drone and connected to the software and energy supplier.

3.2. Vision camera

Also it is going to be incorporated a simple vision camera. It will provide another eye on the aircraft which can be useful to get more references to the rescue team. Obviously it will only be effective only if there are good visibility conditions.

There are several types of vision cameras, regarding two characteristics; weight and definition. It should be chosen a camera with enough definition and as less weight as possible. One of the best cameras on that field is Go Pro Hero 4, it is being used by several professional outdoors filming companies. Definition is great, weight is low and the price is acceptable. Moreover this camera is able to give a 170 degrees vision, able to scan more ground area than other cameras.

Figure 42: vision camera

3.3. Arduino flight system

The Arduino flight system is an open source software which basically provides a completely autonomous flight with uncountable applications such as automatic take-off and landing, waypoints navigation, mission planning and camera controls. It works with a variety of ground control station (GCS) software for programming and mission operations and offers a complete UAV solution.

That system will allow to plan each mission, opening and infinitive of applications and rescue operations. For example, if there is several areas where the aircraft is going to operate, in just a few minutes that takes to change the program, the aircraft would be able to operate in several areas autonomously. That is such an incredible and powerful characteristic which give a lot of diversity in terms of rescue operations and efficiency.

Another great advantage of this system is telemetry that will provide the communication between the ground station computer and the aircraft by a wireless, providing in-flight data, changing missions on the fly and tuning.

To incorporate this system on the aircraft, it is just needed the following components:

Figure 43: ardupilot components

Figure 44: 3DR Radio Set, telemetry

3.4. Special systems can affect aircraft aerodynamics?

It cannot be forgotten that the incorporation of these especial systems can affect the aerodynamics of the aircraft. Aircraft shape will be changed and that can lead to a different C_D, C_L and m_{ca} rates. In this chapter 3.4 it is going to determinate at what level are these systems going to affect the aerodynamics.

First of all, special systems has been added on the CAD model.

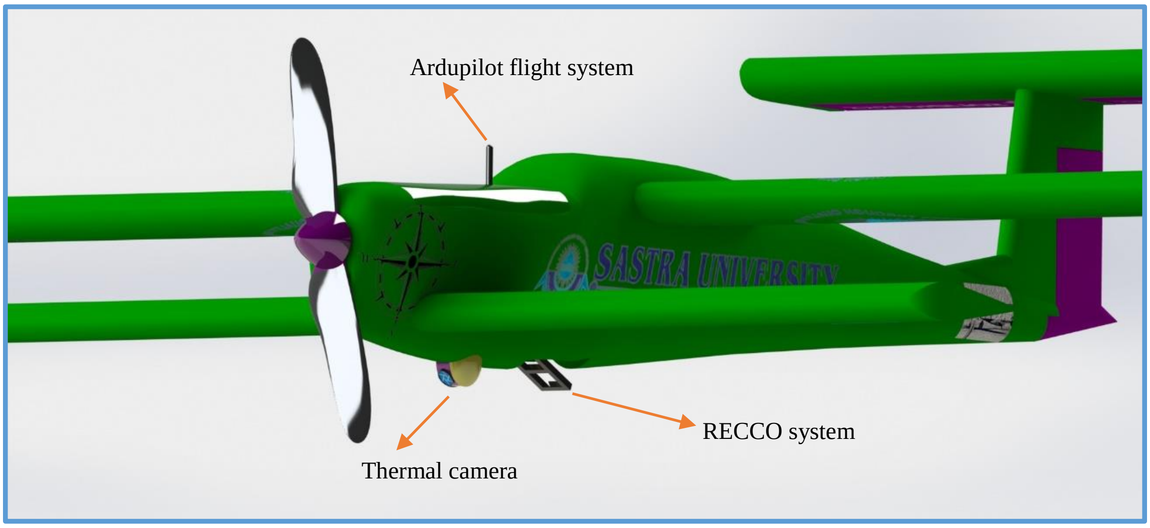

Figure 45: special systems added on the drone

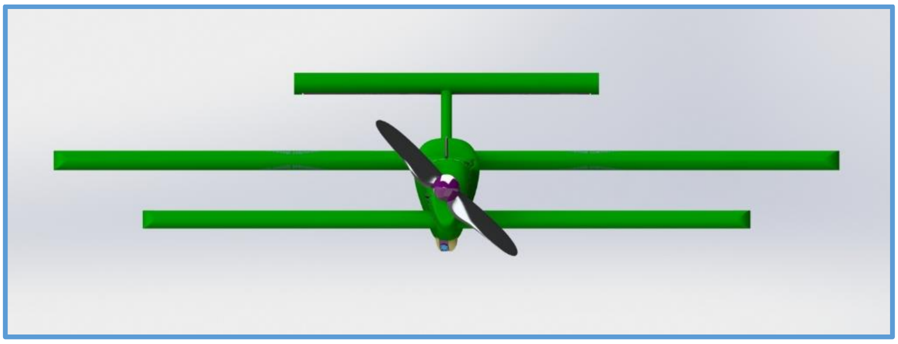

Figure 46: front view special systems added on the drone

In order to determinate at what level the special systems will affect the aerodynamics, it is going to run two exact simulations: one with the systems and the second without them. Results will be compared and analyzed to come up with a conclusion.

The conditions of both simulations must be exactly the same to provide confidence that conditions are:

- External study
- Fluid: air (X direction)
- V = 40 m/s
- P = 101325 Pa
- T = 288,15 K

It is important to highline that this study is about comparing, so it cannot come out any conclusion without knowing both results. It is not a normal aerodynamic study focusing on the exact number of drag, lift and moment. It is the variation of these components between the two results what it matters and decides at what level the special systems affect the aerodynamics. Moreover, if the answer of that question is yes, if there is a real negative affection, then it should be found a solution.

3.4.1. Study 1: with special aircraft systems

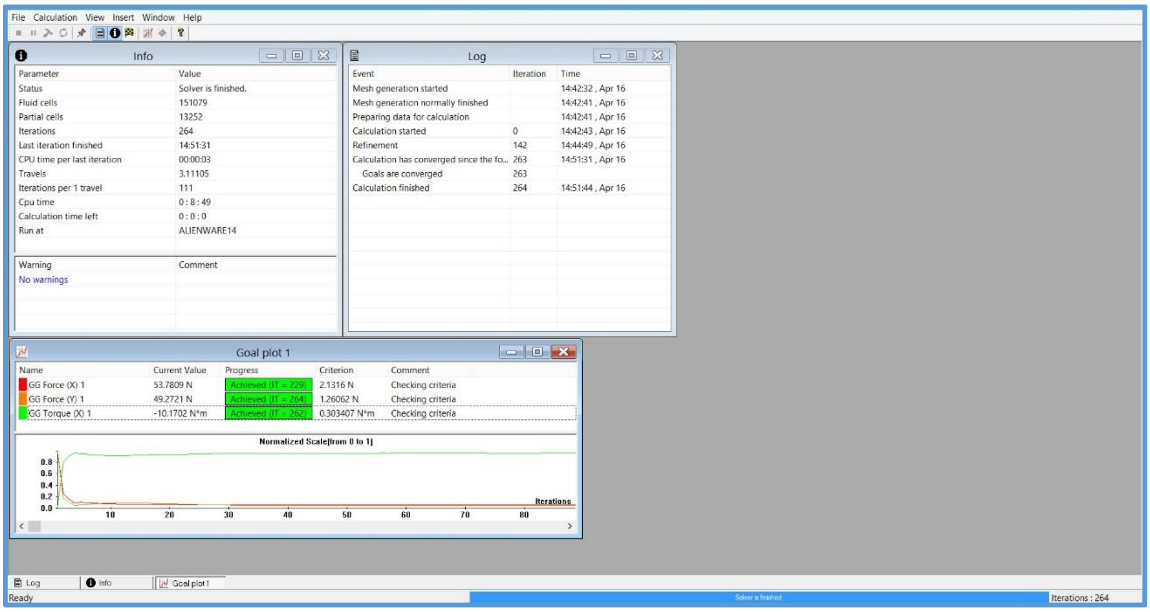

Figure 47: Iteration plot study 1

- Number of iterations: 264
- C_D = 53, 78 N
- C_L = 49, 27 N
- M_{ca} = -10, 17 N·m

3.4.2. Study 2: without special aircraft systems

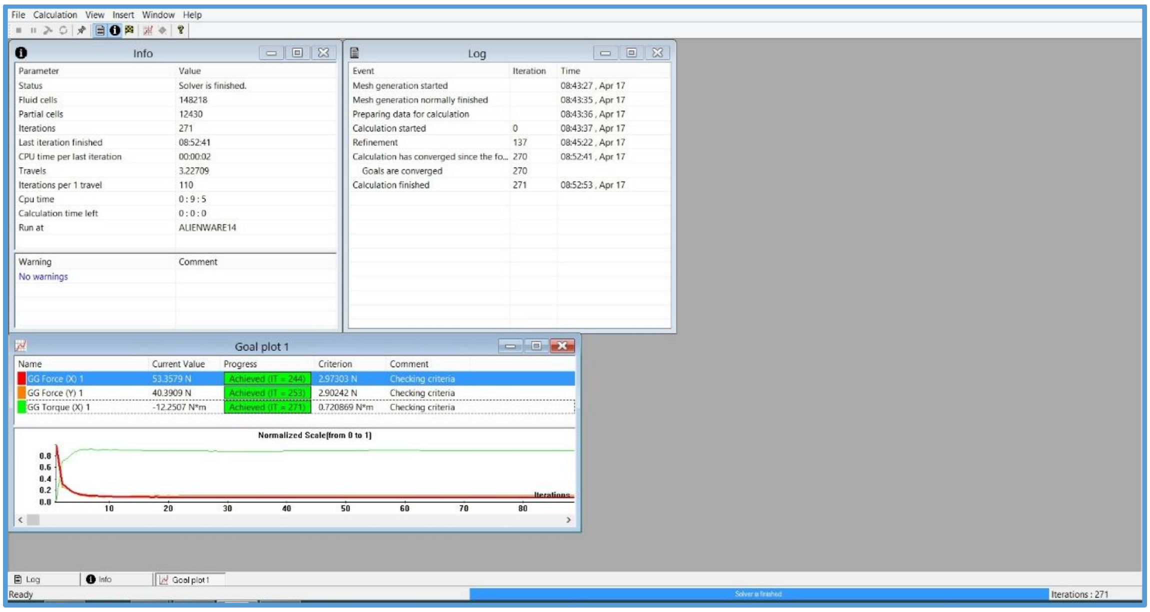

Figure 48: iteration plot study 2

- Number of iterations: 271
- C_D = 53, 36 N
- C_L = 40,4 N
- M_{ca} = -12, 25 N·m

3.4.3. Conclusions

First of all, both results have to be compared by the following table:

	Study 1	Study 2	|ΔS (%)|
Drag force (C_D) [N]	53,28	53,36	0,15
Lift force (C_L) [N]	49,27	40,4	18
Moment (m_{ca}) [N·m]	-10,17	-12,25	17
Nº of iterations	264	271	2,58

Table 7: special aircraft systems aerodynamics study

It can be observed that there is little variation regarding drag force, exactly only a 0.15%. That aspect is positive due to stands that the incorporation of the special aircraft systems are not enhancing the resistance of the drone. However, there is a variation regarding lift force and moment. Concerning lift force, the incorporation of the special systems leads to an increase of an 18 % of the lift force. Fortunately it is not a problem, due to it is enhancing and not decreasing, as long as the systems can support the pressure and there is not any singular turbulence. The next figures shows that it might not be any problem regarding the previous concepts, high pressure and turbulence:

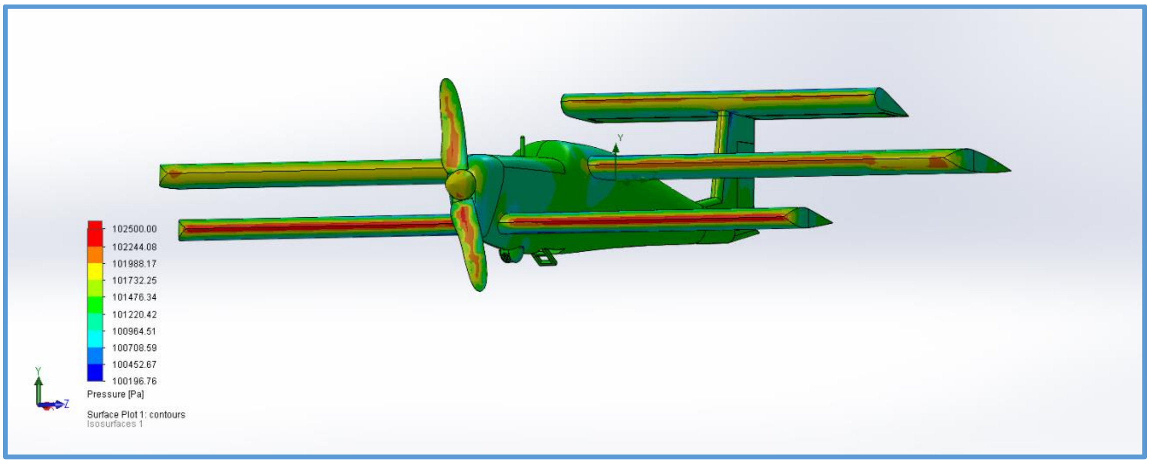

Figure 49: surface pressure plot [PA]

The lack of red and orange color on the special aircraft systems means that there is no high pressure issue. Studying the plots and images it can be realized that the lift force enhance is produced by the cavity where the RECCO system is fixed, which is why it should be examined more carefully:

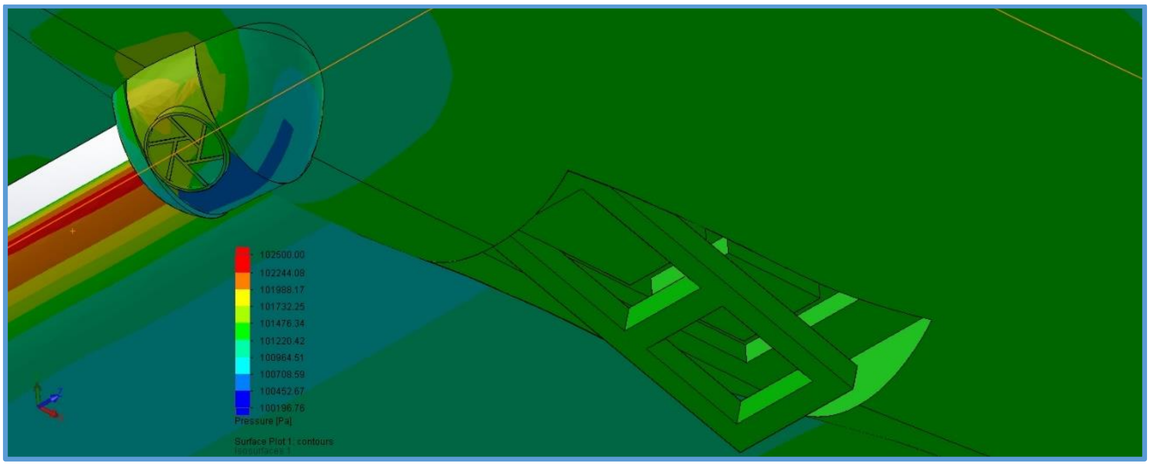

Figure 50: surface pressure plot [PA]

It cannot be detected any high pressure or anomaly inside of the cavity, the lack of red or orange color inside prove the assumption. To sum up, it is undeniable that the special aircraft systems affects the aircraft aerodynamics, however it has been proved that this affection is not negative regarding flight performance.

4. Conclusions

It is undeniable that MAV technology, mini aerial vehicle, is being more present year by year in our society. After doing this project I have realized that not only MAV technology has an enormous potential but also about the responsibility that this technology implies.

This project demonstrates that MAV technology can be really useful on our society, especially on fields where human life can be in danger. It cannot be forgotten that technology has to be always a way to make our duties more easy and safe but never a substitute of us. As far as technology responsibility is concerned, designers and engineers must take into consideration which is the main purpose of each design and creation.

Regarding the project, it is obviously that only a first step has been completed. I would like to turn the theory into reality by building up a real prototype with the aim of prove and improve what it has been done. There are several special aircraft systems like smokers indicators or first aid kid that can be added which will help not only the rescue team but also the targets. This incorporation brings the project to another level, a further stage.

I am convinced that MAV technology and rescue teams will work together in a near future. This combination will bring great results and high efficiency to complete all the tasks that fireman and police department carry on every day. Perhaps it should be needed to create new sections and new training programs but this only can be positive, it will bring more qualified personal and it will create more jobs.

I. Appendix

The aim of this chapter is only to bring out some aerodynamic and aerospace theory. That can be used to understand some of the decisions that has been made on the previous chapters concerning the design.

First of all, it is going to be presented a graphic the forces and moments of an aerodynamics wing:

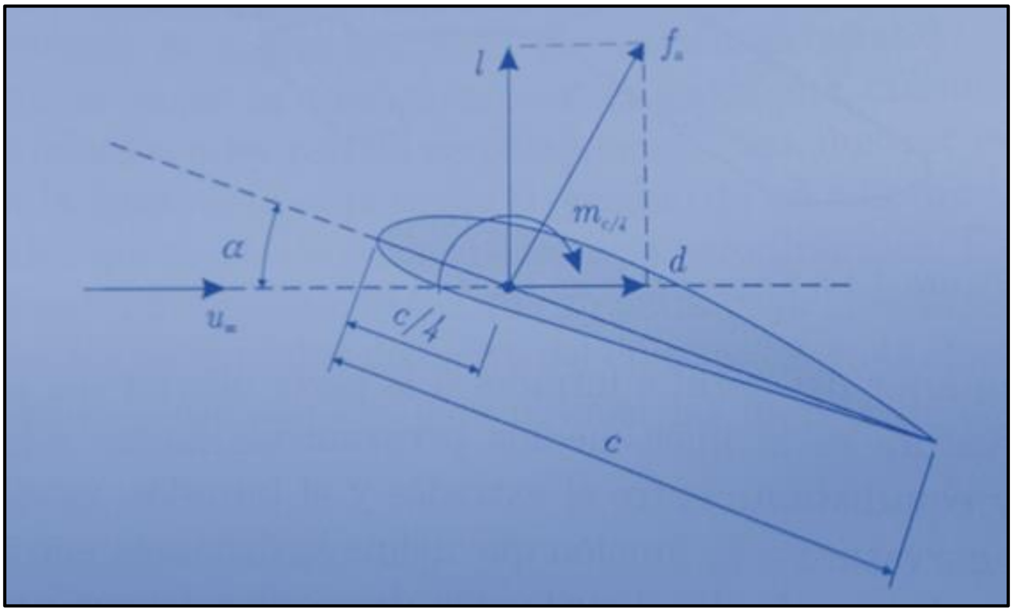

Figure 51: aerodynamic wing forces and moment

To determinate the three more important components of any aero vehicle, lift (l), drag (d) and moment (m_{ca}) it should take into consideration the next 6 physical variables which affects these three components:

- ρ_∞: fluid density
- μ_∞: dynamic viscosity
- a_∞: sound velocity
- c: surface
- u_∞: relative velocity between the fluid and the vehicle
- α: angle of attack

These six physical variables affects to the three components lift, drag and moment:

[1] $l = l(\rho_\infty, \mu_\infty, a_\infty, c, u_\infty, \alpha)$

[2] $d = d(\rho_\infty, \mu_\infty, a_\infty, c, u_\infty, \alpha)$

[3] $m_{ca} = m_{ca}(\rho_\infty, \mu_\infty, a_\infty, c, u_\infty, \alpha)$

If it would be wanted to determinate these three components on a wind tunnel at an Aerospace laboratory it should be done more than 3.6 x 10^{10} trials. Fortunately exists one brilliant method called: dimensional analysis. This method plays a fundamental roll on fluids mechanics and aerodynamics. Basically, this method allows to reduce the previous six physical variables into 3 using non dimensional variables: C_l, C_d and $C_{m,ca}$. These three new variables only depends on:

- Re: number of Reynolds
- M_∞: number of Mach
- α: Alpha attack

If these variables are expressed by mathematical equations:

[4] $$C_l = \frac{l}{\frac{1}{2}\cdot\rho_\infty\cdot u^2{}_\infty\cdot c} = f_l(\alpha, Re, M_\infty)$$

[5] $$C_d = \frac{d}{\frac{1}{2}\cdot\rho_\infty\cdot u^2{}_\infty\cdot c} = f_d(\alpha, Re, M_\infty)$$

[6] $$C_{m,ca} = \frac{m_{ca}}{\frac{1}{2}\cdot\rho_\infty\cdot u^2{}_\infty\cdot c} = f_m(\alpha, Re, M_\infty)$$

Finally, the equations to obtain the three most important components are:

[7] $$l = \frac{1}{2}\rho_\infty u^2{}_\infty C C_L$$

[8] $$d = \frac{1}{2}\rho_\infty u^2{}_\infty C C_d$$

[9] $$m_{ca} = \frac{1}{2}\rho_\infty u^2{}_\infty C^2 C_{m,ca}$$

One of the most critical parameters that any aerospace designer must face is the angle of attack, α attack (figure 51). This angle is critical because, as it can been seen on the previous equations, has a direct effect on the lift, drag and moment components. It aero vehicle needs a different AOA regarding its own purpose. As it has been explained, on this project it has been chosen a low AOA.

The next graphic is interesting due to shows the typical curve of the lift coefficient versus α attack:

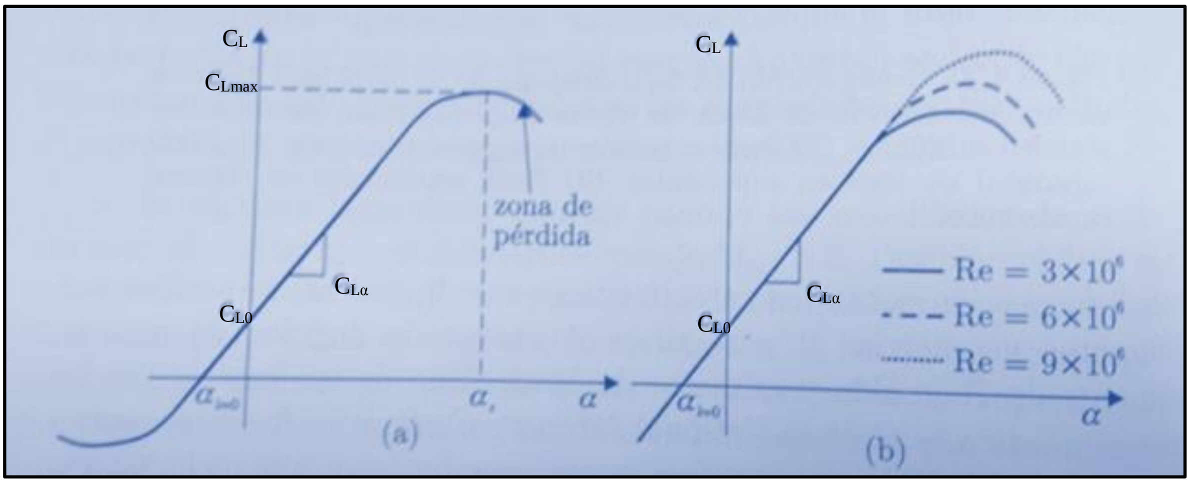

Figure 52: alpha attack vs. lift coefficient

Another important curve is the one that relates the lift coefficient with the drag coefficient:

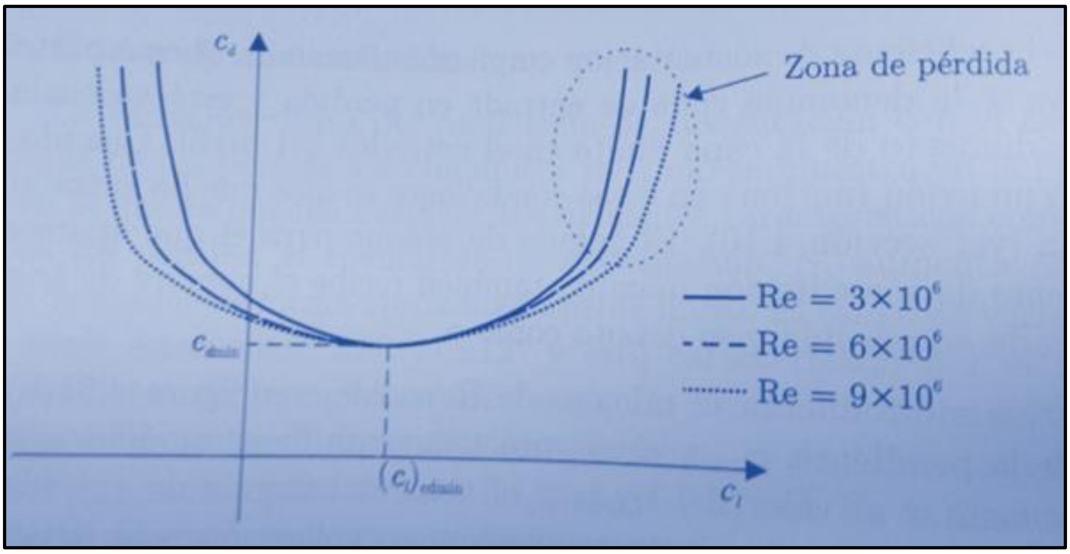

Figure 53: drag coefficient vs. lift coefficient

II. Abbreviations

UAV	Unmanned Aerial Vehicle
MAV	Mini Aerial Vehicle
AOA	Angle Of Attack
C_L	Lift coefficient
C_D	Drag coefficient
C_{ma}	Coefficient of aerodynamic moment
F_P	Propulsion force
F_L	Lift force
F_D	Drag force
Ma	Aerodynamic moment
E	Aerodynamic efficiency
g	Gravity acceleration
m	Mass of MAV
S	Surface
C	Surface

III. List of figures

IV. List of tables

V. Bibliography

A. Books

[1] Sebastián Franchini, Oscar López García “Introducción a la ingeniería aeroespacial, 2ª Edición.

[2] Dr. C. Ramprasadh, “Estimation of Aerodynamic Angles in a Mini Aerial Vehicle using Sensor Fusion”.

[3] Andy Lennon, “Basis of R/C model Aircraft design, practical techniques for building better models”.

[4] Sergio Gómez González, “El gran libro de Solidworks”

[5] Lloyd R. Jenkinson, Jim Marchman, “Indian version of Aircraft design projects: For Engineering Students”

B. Companies

[1] RECCO system company, www.recco.com

[2] Open source Ardupilot, www.ardupilot.com

[3] Hobby King company, www.hobbyking.com