PFC – February 12, 2015

Q4 – LLNTM – FNB

STUDY AND GUIDELINE OF ANCHOR HANDLING OPERATIONS AND RIG MOVE PROCEDURES IN OFFSHORE INDUSTRY

Author: Albert Pons Asturias

Tutor: Francesc Xavier Martínez De Osés

Complimentary homepage,

TABLE OF CONTENTS

1. LIST OF FIGURES

2. FOREWORD

During my studies, I discovered the offshore industry through various methods and I was attracted by some aspects like the short contracts on board and well payments on and off. That is why I started the DP* training; the key in the offshore industry.

After the Bachelor's degree in Maritime Navigation, I performed the basic/introduction course in Barcelona's faculty. Later on, I realized the 30 days familiarization in a harbor tug vessel DP class 1 "*RAMON CASAS*" sailing in Barcelona port. After that, I thought: if I arrived until here, I have to continue with this way until the end of this training. Therefore, when I finished the high degree in Nautical and Maritime Transport I went to London to perform the advanced DP course. Actually, I finished my 6 months DP time sailing in South China and Caribbean Sea as a trainee DPO* in HARTMANN OFFSHORE on board DP class 2 vessels "*UOS DISCOVERY*, *UOS COLUMBIA* and *UOS VOYAGER*". At this moment all documentation are already delivered to the NI* and I am waiting for the Full Dynamic Positioning Operator Certificate (Unlimited).

Figure.1

As a result of the tragic disaster with Bourbon Dolphin in April 2007, the NMD* issued various actions for immediate implementation on all Norwegian flagged AHTSV* and all other vessels working within Norwegian waters. But the main propose of this manual is to explain the technical knowledge, procedures and risks that I learned to all crew directly or indirectly involved in any rig move, towing or other AH* operations.

Particular attention should be paid to vessel stability and emergency procedures.

Source: Google image.

* See glossary content (p.48) and the Figure.1 in the list of figures (p.5).

3. INTRODUCTION

This study is intended to provide guidance for safe anchor handling operations on board offshore vessels based in company procedures, international guidelines and specific procedures provided by charters.

Figure.2

Anchor handling involves a number of special marine operations. The high tensions experienced in chains and wires may cause high heeling moments and may cause high transverse and/or astern movements of the anchor handling vessel. The vessel's motion through the water may also be affected by high hauling speed on the anchor handling winch or as result of any loss of bollard pull. The vessel may be pulled astern at speed by the tension in a heavy anchor arrangement. Any simultaneous loss of thrust, for any reason, on the vessel may lead to a rotation, which would lead to considerable extra transverse forces. Environmental conditions will also influence the operations. For these reasons, the vessel's stability needs to be closely monitored. Operations on deck involve other hazards of which all personnel should be aware. Familiarity with the contents of this manual is essential to all personnel involved in the anchor handling operations. Teamwork is essential.

The offshore industry covers a very world field, that is why it is not possible to describe every situation as all jobs are different but general guidelines for stability, winch handling and anchor handling operations are given below.

"THE MASTER OR OTHER CREW MEMBER, HAVING ANY CONCERNS ABOUT THE OPERATION, WILL STOP THE JOB"

Source: Global Marine.

* See Figure.2 in the list of figures (p.5).

4. STABILITY

The stability of the vessel should be checked prior to starting. I addition to sailing condition, stability calculations should consider worst case scenarios which may occur towards the end of a prolonged job. Printouts of these conditions are to be displayed throughout the operation and reviewed as soon as there is any event which may change the vessel's conduction. Any criteria in the approved stability booklet must be adhered to.

Prior to sailing a document must be displayed on the bridge, where it is visible to be navigator on duty, to show the acceptable vertical and horizontal transverse force/tensions to which the vessel can be exposed. This should show a sketch of the GZ* curve and a table of the tension/force which give the maximum acceptable heeling moment. Calculations must show the maximum acceptable tension in wire/chain, including transverse force, which can be accepted in order for the vessel's maximum heeling to be limited by one of the following angles:

- Heeling angle equivalent to a GZ value equal to 50% of GZ maximum.
- The angle of flooding of the work deck (i.e. the angle which results in water on working deck when the deck is flat).
- 15 degrees.

The calculation should then be made to show the maximum force from the wire or chain, acting down at the stern roller and transversely to the outer pins, which would be acceptable without taking the vessel beyond the angles started above. The heeling moment based on transverse bollard pull must also be shown and allowed for.

* See glossary content (p.48).

Anchor Handling guidelines suggest that the vertical component is to be taken as the distance, vertically, from the deck at the tow pins to the center of the stern thruster or propeller shaft, whichever is the lower.

The notice to be posted should also show the maximum force in the wire or chain as well as the point where the lateral force is assumed to be applied, which means on the towing pin or stern roller. The maximum vertical pull on the wire or chain must not be such as to exceed those limits given above or to exceed the SWL* of the roller. It may be necessary to obtain some of the information needed for the above calculations from the charterer or their representative.

If a deep water move is planned, weight on stern roller can be hundreds of tones, which will be applied at a distance off center line according to the set-up of the towing pins. This will add to listing moments and stern trim; this type of vessel usually suffers reduction of stability and the deck edge is immersed earlier as the stern trim increases. A flooded deck at this point, e.g. from a breaking wave can also cause a temporary reduction in stability. Fuel consumption from double bottoms must also be considered along with use of fresh water and ballasting condition. Before any ballasting operation is carried out the operator should be aware of the immense effect on stability of having any tank slack, particularly transverse roll reduction tanks.

Consideration should be given to the maximum listing or heeling angle which would be acceptable during the operation and forethought given to what action to take should such an angle be approached. To preserve stability, by reducing the risk of flooding, all watertight doors which open onto the main deck and give access too under deck spaces should be kept shut, except for access, throughout the operation. All such doors should be marked to the effect that they should not be left open during AH or towing operations.

* See glossary content (p.48).

Prior to AH operations the vessel's stability must be calculated for all stages throughout the AH operation. The loadstar stability program should be used and a survey report printed out.

This will show all GZ values, tank statuses and how the vessel meets the intact stability criteria supported by graphical information. The vessel must ensure that the number of slack tanks carried is reduced to a minimum and prior to any AH operation ensure that the charterer has removed any liquid bulks from the vessel as the center of gravity of the liquid bulk tanks coupled with the free surface effect of slack tanks will drastically reduce the vessel's GM*. The usually dimensions of this vessel´s stern roller are a diameter of 3,5 m* and a breadth of 0,6 m. And the stern roller has a SWL of about 550 T* downward pull.

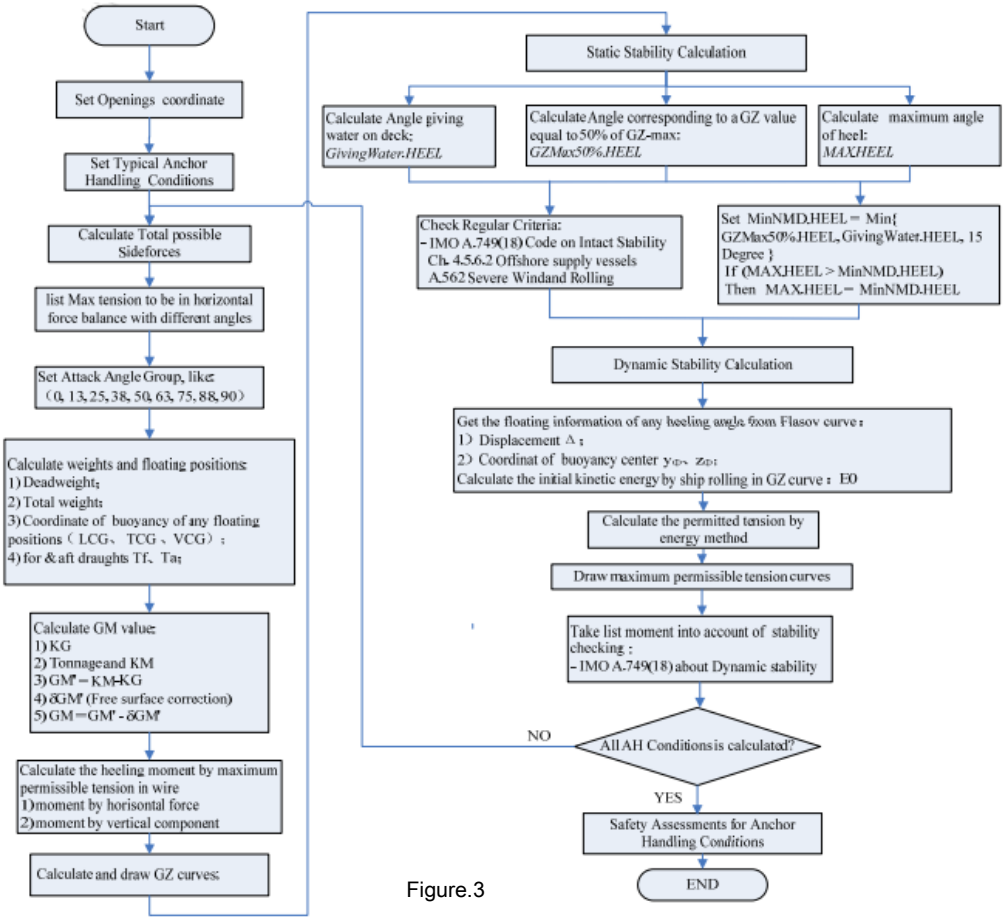

Figure.3

Source: Murphy Ltd.

* See glossary content (p.48) and the Figure.3 in the list of figures (p.5).

5. RESPONSIBILITIES, SAFETY AND COMMUNICATION

Figure.4

The communication plays an important role in this business. Externally communications between all parties are vitally important. The more people who know what is going on the safer the job will be. Briefings should be shared by; as many as possible and contingency plans should be discussed before the operation.

On the other hand, the internally communication between bridge, where the master and winch driver will be, and the AH deck must be decided prior the operation. Dependent on vessel´s equipment and the operation concerned, the best means of communication may be personal UHF* or VHF* radios, or by loudspeaker. Whichever means of communication is decided upon; it should be thoroughly tested prior to starting the operation.

A procedure book is produced with all relevant information and should be supplied to the vessel on confirmation of contract. The oil company involved appoints a tow master and marine, and a pre rig move meeting and safety briefing should be held on board prior to mobilization. If this is not possible, rig move procedures are to be transmitted to the vessel and agreed by tow master and vessel crew. Relevant risk assessments should be reviewed and discussed, a new risk assessment should be written for any unusual operation being planned.

Particularly where two vessels are working together, a communication plan for the operation must be established which in particular unsure an effective and coordinated action in the event of any unintended incident.

Source: Google image.

* See glossary content (p.48) and the Figure.4 in the list of figures (p.5).

A toolbox talk should be held with ship´s crew to instruct them of the intentions, and to emphasize the safety aspects. One hour prior to job commencement in field, tank status, freeboard and calculated GM information to be transmitted to owners.

During AH operations for each watch there must be one designed signalman only. This will be decided prior to commencement of AH operations as to who will be the designated signalman for each watch. The reason for this is to avoid confusion between the winch or crane drivers and the deck crew. It is also a matter of paramount safety. It will avoid winch and crane drivers receiving contradicting signals. In addition, if there is only one signalman he will only signal when the deck crew is clear and it is safe for the winch or crane to operate. This reduces the risk of incorrect signals and injury to persons or damage to equipment.

5.1 Training

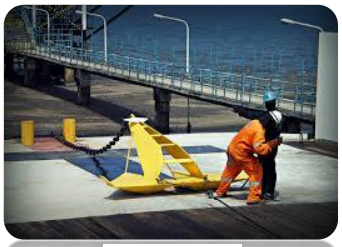

Figure.5

Familiarity of personnel with all relevant onboard systems is essential. Personnel new to the ship should be given a ship specific induction, which should include, in addition to safety matters, any parts of the anchor handling equipment, which they may encounter during their assignment to the vessel. Every opportunity should be used to give officers the chance to learn to handle the ship and winches safely. Occasions when there is less intensive workload, e.g. spooling wires in port, may provide good opportunities for training. Training requirements may, on occasion, require that personnel move to a more suitable vessel. Where appropriate, training courses will be identified and used as a base for continued on board training.

Source: Google image.

* See Figure.5 in the list of figures (p.5).

All personnel on board must keep an up to date record of their anchor handling training. The main steps to be in mind are the following ones:

- General instruction of the design, configuration and function from the winch.
- General instruction of the main pumps, pressure tank and valves.
- Instruction of handling and function of the servo pump unit.
- Instruction of handling and function of the wheelhouse panel and operators chair.
- Instruction of handling and function of the control system.
- Emergency operation.
- Instruction how to change and clean the filters of main system.
- Vent of the complete hydraulic system.
- General maintenance.

5.2 Toolbox talks

Before each watch, a toolbox talk must be carried out between the bridge team, the deck crew and the engine room. The toolbox talk must cover all aspects of the job that are expected to be encountered in the upcoming watch. Before the toolbox talk is carried out, the risk assessment will be read through to all watch members. In addition, any relevant rig shift procedures will be discussed. The toolbox talk will also cover the agreed emergency signal.

Normally the assigned sound signal for the deck crew to down tools and leave the deck as quickly as possible is a prolonged blast on the ship's whistle. All deck crew must acknowledge that they understand this signal before going out onto deck.

Hartmann Offshore GmbH	Form-No.: TBTF1
Tool Box Talk Form	Rev.:

ol Box Talk Form

e:		Person Conducting Meeting:	Master/ChOff
ect Name:	*Anchor* Handling	Meeting Location:	Bridge

ns Discussed:*
relative issues about the Rig Shift taking in to account the issues concerning the vessel in the Rig
ceedures Guide. All safety aspects including Work Permit and Risk Assessment that are directly
out for every aspect of the job to be undertaken. All involved must understand what is expected of
n. Safety of Personnel, vessel and the environment.
nalman for the watch has been designated (ie Bosun).
ergency signal has been discussed and understood by all crew members.

Related Problem Areas/Concerns:
Proceedures changing at short notice.
e of weather. If seas build and deck becomes awash the job will be
ped and re-evaluated with regard to the crew's safety.

endees: (sign and print name)
crew members involved in the Rig Shift.

ployee Improvement Suggestions:

Determine if all corrective measures have been implemented.
Report results of latest site safety inspection.
Review recent injury or accident reports.
Discuss current issues.
Plan future operations with safety in mind.

Figure.6

Source: Hartmann Offshore.

* See Figure.6 in the list of figures (p.5).

5.3 Equipment checks

Prior to leaving port, a navigation package is usually installed in the bridge. This displays information such as the current and/or proposed anchor patterns as well as pipelines, cables etc on the seabed. Positions are given in Northing´s and Easting´s, so are not transferable to radar or electronic charts using Latitude and Longitude. Deck equipment should be checked, a good supply of punches and hammers are needed, and some breakage of these must be expected, especially with kenter or pear links. Buoy lassoes, for recovering buoys from the water, should be inspected if they are needed, along with boathooks, and plenty of split pins and or lead.

5.4 Bollard pull

Masters should ensure that the vessel´s bollard pull is adequate for the proposed job. In consideration this masters should be aware that bollard pull, as measured for the vessel´s certificates in some cases does not allow for the power used by working deck machinery. Allowance for any reduction should be made when considering bollard pull available during a job. Detailed information is available in the specific certificates of each equipment using on deck. Maximum bollard pull is achieved with the cable right astern, rudders amidships and a further reduction in bollard pull must be allowed for should the angle of the cable lead other than right astern.

Figure.7

Source: Marine survey.

* See Figure.7 in the list of figures (p.5).

5.5 Personal protection equipment

Supplied PPE and safety equipment, including inflatable life vests, must be worn. In cold weather, consideration should be given to wearing buoyancy suits, but these can be very hot and restrict movement. When breaking open kenter links and doing any hammering, eye protection is needed.

Safety harnesses should be available if needed. Working hours should be carefully monitored to ensure that no person exceeds his legal limits and that hours of rest are adequate. Fatigue should be recognized as a hazard and periods of rest should be adequate. Sufficient experienced crew must be available to allow for this: rig shifts can go on for four weeks.

Figure.8

Source: Google image.

* See Figure.8 in the list of figures (p.5).

6. THE ANCHORS

Most semi-submersible drilling rigs today use *Stevpris* anchors. These have the advantages that they have very high holding power for their weight, will dig in on most bottoms, are cheap, and are safe and stable on deck. The disadvantage is that, when they land on the bottom flukes upwards, they will never dig in.

Their fluke angles can be fairly easily changed from 32 to 42 to 50 degrees by pulling down on fluke tips with a tugger, and moving the locking pins. There are also two types of Bruce anchor still in use, the *Twin Shank* and the *FFTS*. Bruce anchors will always dig in, no matter how they land on the bottom, although their ultimate holding power is not as high as a *Stevpris*. They cost more, but are very rugged. A Twin Shank needs a special, large, chasing collar, which slips up its shank to keep on the elbow of the anchor. If exceeds weight is applied this collar distorts and passes over the keeps. It will then never come off, and the anchor has to be buoyed off, or changed out. An FFTS uses a normal collar, so like a *Stevpris*, is held at the anchor shackle. Both these anchors are unsteady on deck, liable to fall over if placed on the shank, and the FFTS also tips forwards if pulled. Pipe lay barges usually use AC-14 anchors, developed for United States aircraft carriers. They are easy to handle and stow, dig in on the bottom immediately and are rugged, but have an ultimate holding power less than half that of a *Stevpris*.

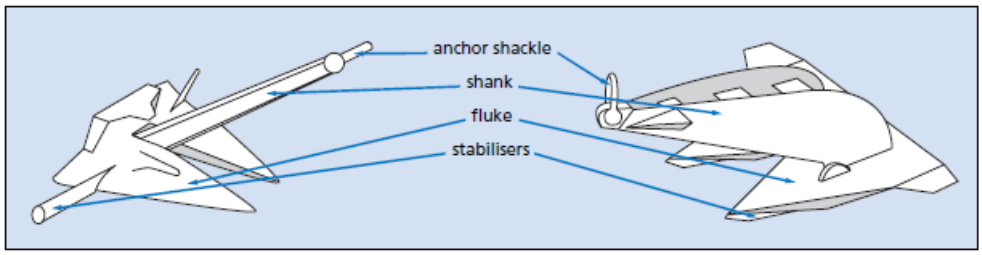

Figure.9

Source: Maersk.

* See Figure.9 in the list of figures (p.5).

A short overview of the anchors in use today, is presented on the following pages:

Based upon certain characteristics such as fluke area, shank, stabilizers, it is possible to classify the various anchor types. To allow a rough comparison of anchor type efficiency, an indication (*) is provided for a 10 T anchor as:

$$\boldsymbol{Holding\ Capacity = Weight * Efficiency}$$

Class A

Efficiency range *33 to 55. Slender anchors with ultra-penetration.

Figure.10

Figure.11

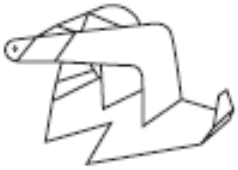

Figure.12

Class B

Efficiency range *17 to 25. Anchors with elbowed shank, allowing for improved penetration.

Figure.13

Figure.14

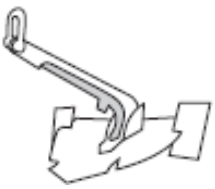

Figure.15

Source: Maersk.

* See Figures.10-15 in the list of figures (p.5).

Class C

Efficiency range *14 to 26. Anchors with open crown hinge near the center of gravity and relatively short shank and stabilizers or built in stabilizers.

Figure.16

Figure.17

Figure.18

Figure.19

Class D

Efficiency range *8 to 15. Anchors with hinge and stabilizers at the rear and relatively long shanks and stabilizers.

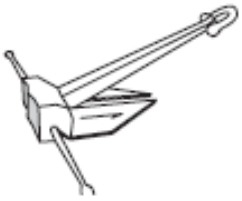

Figure.20

Figure.21

Figure.22

Figure.23

Source: Maersk.

* See Figures.16-23 in the list of figures (p.5-6).

Class E

Efficiency range *8 to 11. Anchors with very short, thick stabilizers; hinge at the rear and a relatively short, more or less square-shaped shank.

Figure.24

Figure.25

Figure.26

Figure.27

Class F

Efficiency range *4 to 6. Anchors with square shank, no stock stabilizers and the stabilizing resistance is built in the crown.

Figure.28

Figure.29

Figure.30

Figure.31

Class G

Efficiency range *<6. Anchors with small fluke area and stabilizers at the front of the shank.

Figure.32

Figure.33

Figure.34

Figure.35

Source: Maersk.

* See Figures.24-35 in the list of figures (p.6).

7. RIG/PLATFORM TYPES

In this section, we will explain the main features of the two types of platforms that exist actually. The main difference between the previous ones is the working deep, with this I mean that Jack-up drilling units are provided by three legs and operate in shallow waters, and the Semi-submersibles drilling units not, and that is why the last ones needs anchors to hold position in deep water areas.

7.1 Jack-up drilling unit

This type of platform is designed for drilling in water depth up to 100 meters. Is standing on three legs, each one ending in a footing; these footings are called spud cans. The derrick is normally situated on a cantilever, in drilling position the canteliever is skidded out so the derrick is extracted over the rig's stern. The BOP* is placed under the rig floor, the tubular form the BOP to seabed is called the conductor pipe. At production platforms, a Jack-up is placed very close to the platform and the cantiliever is skidded over the platform.

Before rig move, the rig has to be prepared for towing, all pipe from the derrick are laid down on deck and secured. Risers and BOP is retrieved and secured. Watertight integrity is checked, and the cantilever skidded in, flush with aft end of rig and secured. Deck cargo secured, cranes laid down and secured as well. Stability is calculated, ballast distributed for the rig to float at even keep, in this situation the rig will not accept cargo handling, as the calculations are done, and cargo secured on deck. Weather conditions for rig move of Jack-up rigs are normally 15-20 knots of wind, sea/swell less than 1,5 meters, weather window more than 24 hours. A tow master is normally in charge of operations. A rig move starts with jacking down to two meter draft and checking for watertight condition. All overboard, valves are checked for leaks.

* See glossary content (p.48).

At this same time, one or more boats for towing will be connected to the tow bridle. Then the rig is jacked down to calculated draft, boats ordered to pull minimum power. Due to the considerable size of spud cans, the rig will jack further down to break suction of the spud cans. This is called freeing legs and can take hours depending of the amount penetration of spud cans into the seabed.

Figure.36

When the rig float free, the legs are jacked up, flush with bottom of hull and the tow begins. During the tow, a jack-up rig afloat is very sensible to roll and pitch period, the long legs can cause a whipping effect, and therefore the roll and pitch period has to be more than 10 seconds. Severe rolling with short rolling period will cause structural damage at jacking houses and is known to have caused loss of rigs. In the rigs operational manual limits for roll and pitch are given. At the new location, the rig will lower legs and tag bottom, jack the hull free of the water and preload. Preloading takes several hours and is a process where the rig is ballasted corresponding to maximum environmental conditions, normally a 100 years wind condition.

Again, operational manual will give the precise procedure. During preload, no cargo operations are allowed to take place. When preload is completed, tugs are released and the rig jacked to working air gap, and the cantilever skidded out. Now drilling and cargo operations can begin. A jack-up drilling rig is fitted with an anchoring system consisting of four anchors. These anchors are light anchors, connected to wire of diameters less than three inches. In some cases, anchor handling will take place with jack ups.

Source: Own picture.

* See Figure.36 in the list of figures (p.6).

The jack-up will jack down close to location, run out anchors, and use the anchor system to move in close to platforms or subsea production wellheads. The tugs will be connected up, but will only use little or no power. To receive anchors, the AHTSV will move close to the rig, and the rig's crane will first lower the anchor buoy and pennant wire, and then lower the anchor to the deck. The anchor is then run out to position, lowered in the pennant wire, pennant wire connected to anchor buoy, then the buoy is launched. To retrieve the anchor, the AHTSV will move in stern to the buoy, catch the buoy, disconnect the pennant wire from the buoy, connect work wire to pennant wire, then break the anchor loose of seabed, take anchor on deck and finally return the anchor, buoy and pennant to the rig.

7.2 Semi-submersible drilling unit

A semi-submersible drilling unit is designed to drill at water depth more than 300 metres. This kind of rig is floating on stability columns and has low GM, and therefore a slow rolling period. This makes the semi an acceptable working platform as regards to crane operation etc. Generally a semi is anchored in a mooring spread of eight anchors, 30/60 degrees; another number of anchor is used, but not very often. Heading into the prevailing weather.

Forward end is defined with heli-deck and accommodations. On rigs with eight anchors, the anchors are numbered clockwise with anchor No.1 forward starboard. The BOP is placed on the seabed, connecting with risers up to the rig. Between BOP and riser, a flexible joint is installed. The purpose for a flex joint is to allow some movement of the rig due to the elasticity of the mooring spread. At 90 metres this elasticity is greater than the flexibility of the flex joint, this is therefore a critical depth. A riser angle of up to 10 degrees from vertical is maximum allowable. In case of severe weather, where the riser angle increases to maximum allowable the rig can disconnect from the BOP, and connect when the weather improves.

At sea level, a slip joint is installed in the riser system. The purpose of a slip joint is to allow the rig to heave. At the slip joint the riser tensioning system keeps tension on the riser, this is to carry the weight of the riser. Slip joints has a stroke of 50 feet. Just under the rig floor, a ball joint is installed. The purpose of a ball joint is to allow the rig to roll and pitch. The last component here to be mentioned is the drill string compensator.

This purpose of a compensator has a stroke of 20 feet. To prepare a semi for tow, pipe is paid down on deck and secured, deck cargo is secured. The last operations before a rig move is to retrieve the risers and the BOP, secure these items on deck, and de-ballast the rig to transit draft. At transit draft, the bolsters are visible. Sequences for retrieving anchors are given in the procedure for rig move.

Figure.37

Breast anchors, which are number 2,3,6,7, are retrieved first, then a tug is made fast to the tow bridle, and then the last anchors can be retrieved. During the tow, the rig has a good stability, and can endure severe weather. In some weather conditions, the rig will ballast to survival draft. At the new location, the sequence will be to run anchors No. 4 and 5 first, then anchors No. 1 and 8, disconnect vessel from tow bridle, then run breast anchors.

When all anchors are run and confirmed in the correct position (bearing and distance from rig) the anchors will pre-tensioned to an agreed load, corresponding to 100 years weather condition. In some cases, the combination seabed and anchor system cannot hold the pre-tensioning. In that case, piggyback anchor will be set. Piggyback are anchors in tandem. Anchor spread can extent far from the semi, with piggyback anchors the distance to the rig can be two nautical miles.

Source: Own picture.

* See Figure.37 in the list of figures (p.6).

8. RIG MOVE PROCEDURES

One of the main things that the crewmembers in charge of AH operations have to take in account is that every rig move is different even most of the factors are the same. That is why the charterer procedures shall be reviewed and signed off by all personnel prior to commencement of operations. All new hires shall also be instructed in the use of the procedures and additional to this undergo a suitable training period under supervision until such a time that it is deemed they are competent. All anchor handling equipment is to be made ready on deck prior to operations and will be checked by the vessels officers for any defects or damage. Any findings shall be reported and rectified immediately and the following steps are the relevant ones in these operations;

- A toolbox talk is to be held every 6 hours, prior to each deck shift commencing work.
- No personnel shall be allowed on deck at any time when the hoisting operations are being carried out.
- The Officer on deck or Bosun shall inform the Captain verbally that the crew is in the safe zone prior to any hoisting, heaving or wire tensioning operation.
- All equipment will be visually checked during its deployment.
- The Officer on deck or Bosun will wear a high visibility vest at all times; they will be responsible for the radio communication to the bridge and also be designated as signal man to the winch operator.
- Master and Rig to carry out a risk assessment prior to commence operation.
- Prior to commence operation, the Master will receive a continuous five days weather forecast from the office to determine the operational safety parameters for anchor handling operation in the operational area.

- Master is required to monitor and discuss weather condition with the crew.

- As per the HSEMS all near misses and non-conformities shall be reported to the designated person on the appropriate form immediately.

- Vessels should be ballasted to the advantage of the anchor handling operation except in heavy seas and swell it is advantageous not to ballast the vessel down by the stern too much to avoid the deck becoming awash and creating a danger to both crew and the vessel.

- No crew shall be allowed to work on the deck until they have been made aware of these new procedures and signed off by Master.

- All weather and watertight hatches should be closed to prevent the ingress of water into the vessel.

- Despite the procedure, the Master of the vessel has overriding authority to make any changes to the procedure to ensure the safety of the operation.

8.1 ANCHOR DEPLOYMENT

The initial conditions for anchor deployment are assumed to be as follows:

Each anchor is in a stowed position on the bolster bar with the chaser suspended between the lower fairleader and anchor from its stowed pendant line. The rig can be either under its own power with no towing vessel or under its own power with a towing vessel. As the rig approaches the first anchor position, one stern anchor is lowered off the bolster bar most of the depth to the seabed. The chaser for this anchor should be held midway between fairleader and bolster bar so that the anchor chain runs freely through it. As the rig passes over the first anchor position the anchor is laid on the seabed. While the rig moves across the mooring pattern towards the centre, pay out the stern anchor line.

With the rig at centre of the mooring pattern, stop paying out on the stern anchor line and set the anchor into the seabed by using the rig engines. Then stop the rig engines. Stow the chaser either under tension against the lower fairleader or hung-off on the anchor line about 30 feet below the water level so as to be clear of the wave action zone.

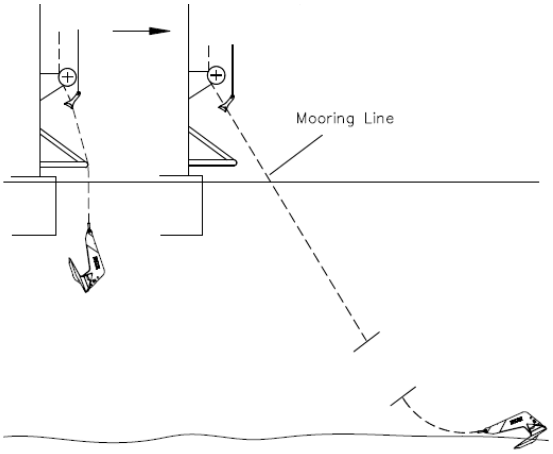

Figure.38

On the anchor opposite the one already set, connect the crane line to the chaser pendant line. Unclamp the pendant line at the rig deck and lower the chaser until it engages the anchor shank tip. Pass the pendant line from the rig crane to the anchor handling vessel. This is done by making the pendant line fast on deck, connecting it to the vessel winch wire and disconnecting the crane line.

Pay out approximately six links of anchor chain from the rig winch until the side wings of the fluke are clear of the bolster bar but with the forward portion of the anchor shank still in contact with the bolster bar.

Source: NWEA Manual.

* See Figure.38 in the list of figures (p.6).

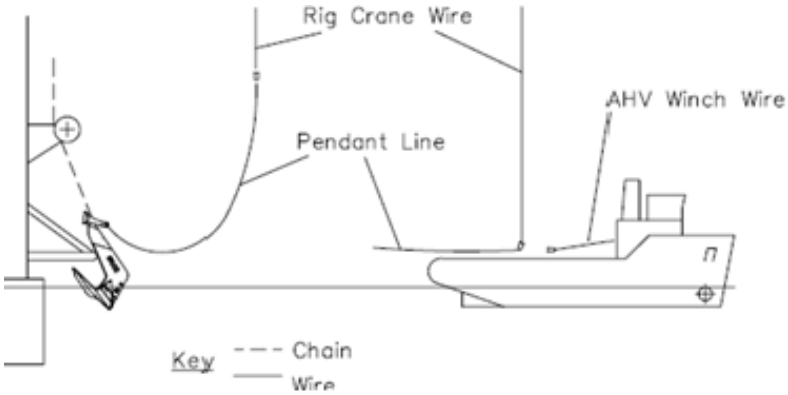

Figure.39

Pull on the pendant line with the vessel using engine thrust so that the chaser engages firmly on the forward portion of the shank and continue pulling to swing the anchor clear of the bolster bar. The anchor will be hanging with its fluke pointing towards the rig.

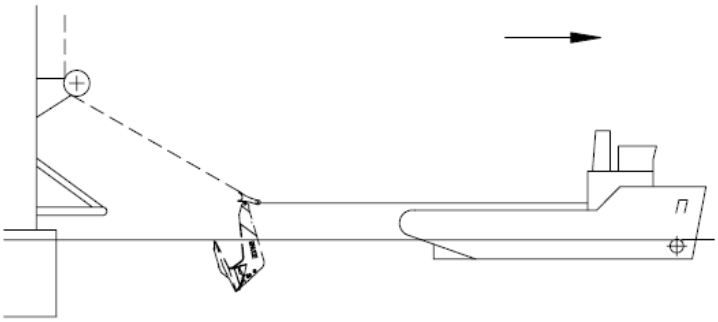

Figure.40

Continue pulling with the vessel engine thrust and allow the rig winch to go back against the brake to maintain not less than 35 T tension in the anchor chain. This will ensure the chaser remains seated on the anchor shank tip while the vessel hauls the pendant line inboard. Stop the vessel winch when the anchor still hangs clear of the vessel propeller wash. Increase the vessel engine power to haul out the rig chain while the rig winch operator maintains the required back tension on the rig winch brake.

Source: NWEA Manual.

* See Figure.39-40 in the list of figures (p.6).

The back tension from the rig winch ensures the chaser remains seated on the forward portion of the anchor shank as the chain is hauled out. The pendulum effect of the anchor handling clear of the propeller wash will prevent turns being inserted in the chain.

Proceed to the anchor setting location. When the catenary of the hauled –out chain sags into contact with the sea bottom, drag forces on the chain will occur and may be progressively substituted for the applied back tension from the rig winch brake so that all of the vessel engine thrust is available for pulling out chain.

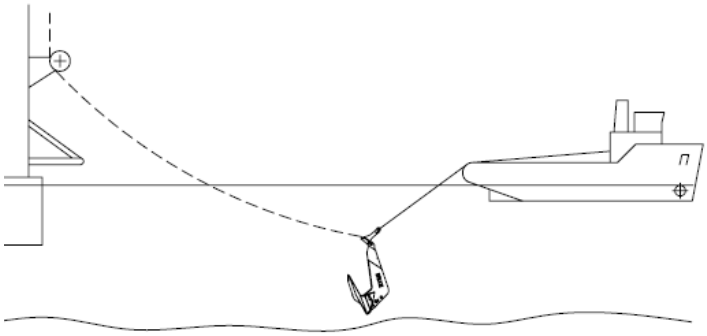

Figure.41

When the anchor chain is fully hauled out the anchor is lowered towards the seabed. Pay out the vessel winch at between 100 and 200 feet per minute while the vessel engines are kept running sufficiently to keep the anchor chain stretched out and the chaser engaged on the anchor shank tip. When the length of towing wire and pendant line outboard of the stern roller of the vessel is equal to water depth plus 20%, the winch is stopped.

The vessel engines are now slowed so that the weight of the anchor and chaser pulls the vessel astern until the anchor makes contact with the seabed. This will be indicated by a sudden sagging of the otherwise taut towing wire stretched between the winch and stern roller of the vessel.

Source: NWEA Manual.

* See Figure.41 in the list of figures (p.6).

Immediately the anchor contacts the seabed, the rig winch operator hauls in 30 to 50 feet of anchor line to tip the anchor towards the rig and set the anchor fluke into the seabed.

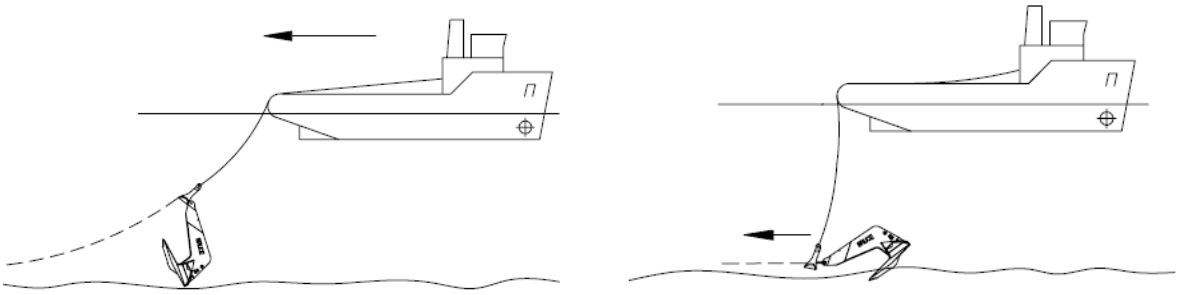

Figure.42

Once the anchor has been tipped towards the rig and the fluke partially set in the seabed, the vessel steams astern over the anchor to pull the chaser towards the rig clear of the anchor shank. When the chaser is clear of the anchor shank and approximately 500 feet's along the anchor chain, the rig winch can commence setting the anchor fully into the seabed.

Meanwhile the chaser will continue to be returned to the rig by the vessel running astern. Alternatively, if desired, the vessel can turn 180 degrees and steam ahead back to the rig. The rig winch continues to haul in until the required anchor setting tension is achieved. The rig winch is stopped and the tension is monitored for 10 minutes. At the same time, anchor setting may be carried out when all of the anchors have been deployed and partially set in the seabed. If 90% of the setting tension remains after the elapse of 10 minutes, the anchor is considered to be holding whereupon the rig winch pays out to decrease tension to the level required for drilling.

Source: NWEA Manual.

* See Figure.42 in the list of figures (p.6).

If 90% of the setting tension does not persist after 10 minutes re-running of the anchor may be necessary.

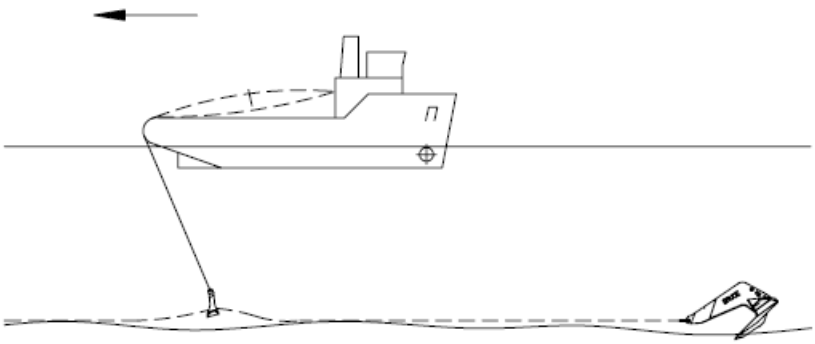

Figure.43

The vessel meanwhile, returns to the rig and takes up a position with its stern roller within reach of the rig crane off the anchor bolster bar. The chaser towing line is then hauled up by the vessel winch until the pendant line connection comes on deck. The pendant line is made fast onboard the vessel and the towing wire is disconnected.

The pendant line is attached to the rig crane via a light safety wire or a shear pin shackle to project the rig crane from dangerous overloads that may occur if the chaser picked up a bight of anchor chain in the event of the anchor chain losing tension at this time. The pendant line is transferred to the rig from the vessel and stowed in a suitable clamp.

The chaser may be stowed under tension against the lower fairleader or hung-off on the anchor line about 30 feet below the water level so as to be well clear of the wave action zone. This completes deployment of the first two anchors. Further anchors are deployed in a similar manner to the second anchor described above.

Source: NWEA Manual.

* See Figure.43 in the list of figures (p.6).

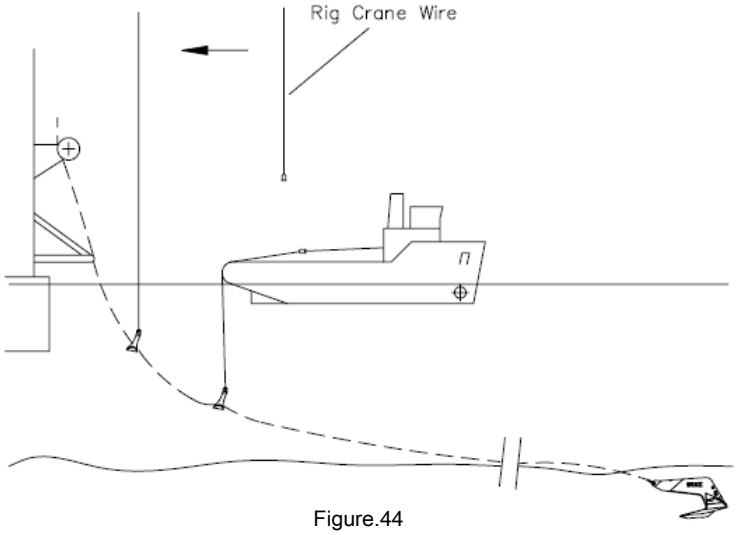

Figure.44

8.2 ANCHOR RECOVERY

The initial conditions are assumed to be as follows:

All anchors have been deployed and are set in the seabed and all anchors lines are at drilling tensions. Each chaser has a sliding shoe providing support over at least three links of chain. The chasers are stowed at the rig. This procedure should be applied to the most heavily loaded anchors first so that the reaction tension can be spread amongst the least loaded anchors. The lesser loaded anchors can be broken out of the seabed using this technique on each anchor in order of decreasing applied load due to storms.

Ultimately the rig hauling vertically on the anchor line may break out the last anchor. The preliminary step is maintain the anchor line at drilling tension prior to commencing chasing to prevent the chaser catching a bight in the chain. The stowed chaser pendant line is attached to the rig crane and the line is unclamped. The pendant line then is passed from the rig crane to the vessel, which is standing by within crane reach of the rig.

Source: NWEA Manual.

* See Figure.44 in the list of figures (p.7).

Then the pendant line is made fast on the vessel deck, disconnected from the rig crane line and attached to the vessel winch towing wire.

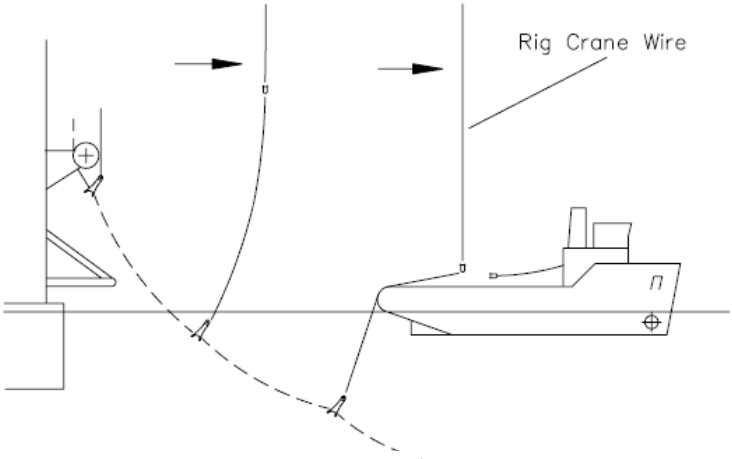

Figure.45

Pendant line equal to water depth is paid out by the vessel winch and the vessel steams away from the rig to the location of the buried anchor. Twitching of the towing line between vessel stem roller and winch as the chaser is being towed to the anchor site indicates the chaser is running correctly link by link under the anchor chain, disturbing the soil around the buried chain, and raising it to the mud-line. This reduces the grip of the soil on the buried chain section.

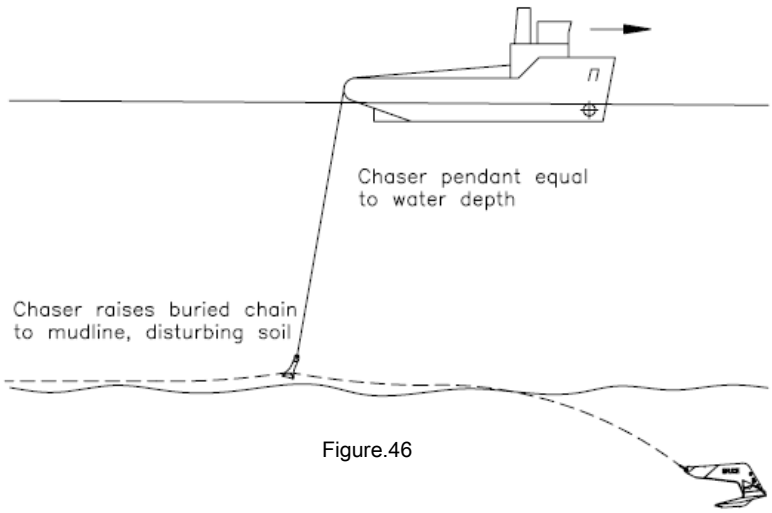

Figure.46

Source: NWEA Manual.

* See Figure.45-46 in the list of figures (p.7).

When the chaser engages the portion of chain, which leads below the mud-line to a deeply buried anchor, the load in the chaser pendant will increase rapidly due to soil resistance and chain forces acting on the chaser. The vessel now reduces speed almost completely to stop the chaser sliding further on the chain and the rig winch commences to heave in anchor line to increase tension to maximum. If the anchor does not start to drag due to the chain having been pulled from the grip of the soil by the passage of the chaser, the vessel commences heaving in the chaser pendant to pull up on the chain until the rig winch operator reports that anchor line is coming onboard and the anchor is being dragged towards the rig.

The vessel then stops heaving in the pendant to hold the chaser in a now elevated position and so impose a high uplift angle in the anchor chain at the anchor. The rig winch continues to heave in anchor line to drag the anchor at this high uplift towards the rig. Due to the high uplift caused by the chain sliding through the elevated chaser, the initial dragging load of the anchor can be considerably less than the original setting load if the chaser is sufficiently elevated and so be well within the capacity of the rig winch.

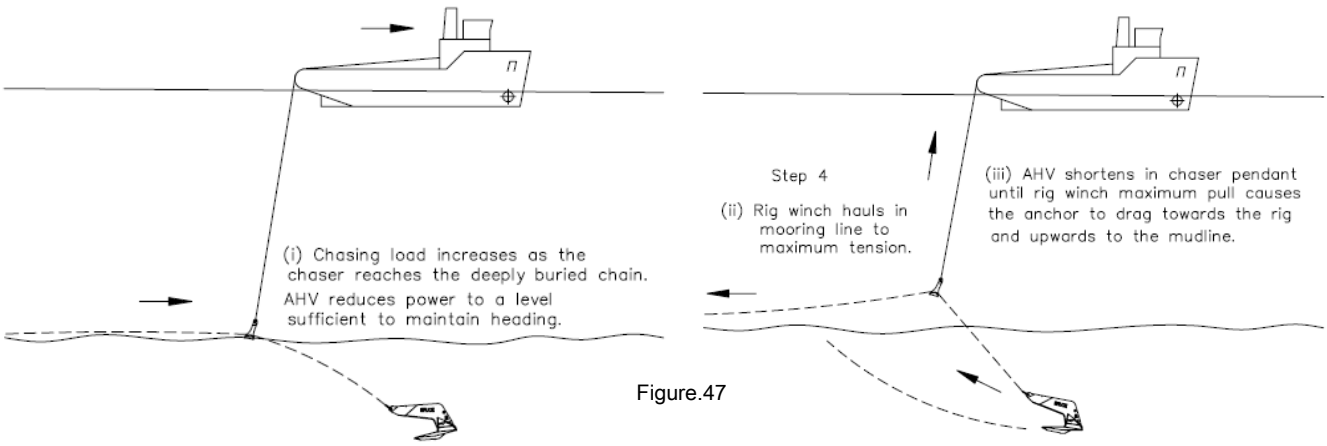

Figure.47

Source: NWEA Manual.

* See Figure.47 in the list of figures (p.7).

The load on the rig winch will progressively decrease due to the anchor rising to the mud line as it is dragged at short scope. When the rig winch tension reaches about 25% of the original setting load, stop the winch. The vessel now pays out pendant slightly in excess of water depth and pulls the chaser along the chain to seat it firmly onto the forward portion of the anchor shank close to the mud-line. The anchor will now break out easily from the seabed soil.

It may be possible to break the anchor out directly using the chaser if it is not deeply buried or is in a sand seabed. In this case the rig should maintain a steady back tension of about 30 T to prevent the chaser picking up a bight of chain while the vessel winch hauls in the chaser pendant and breaks out the anchor. If the anchor has been set to a line tension exceeding rig winch pulling power by a storm, it may be necessary to pull in with two winches on the far side of the rig to cause the anchor to drag.

A noticeable drop in tension at the rig winch and/or at the vessel winch indicates the anchor has broken out of the seabed. Stop the rig and vessel winches at this point. The vessel winch hauls the pendant line in until the tow wire/chaser pendant connection appears at the stern roller. The vessel winch is then stopped and the vessel employs engine thrust to maintain a back tension in the anchor chain of at least 30 T.

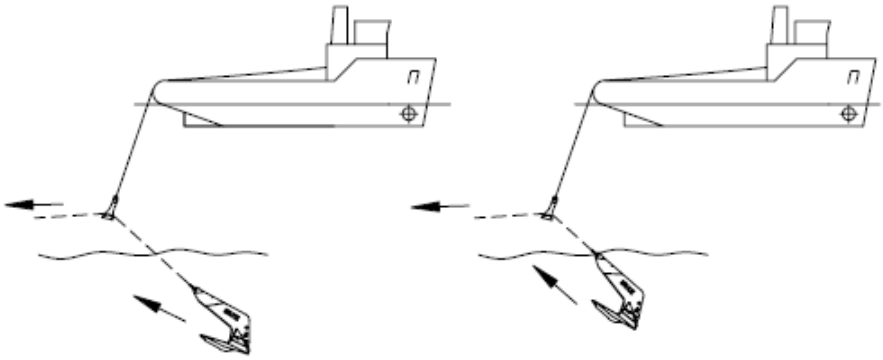

Figure.48

Source: NWEA Manual.

* See Figure.48 in the list of figures (p.7).

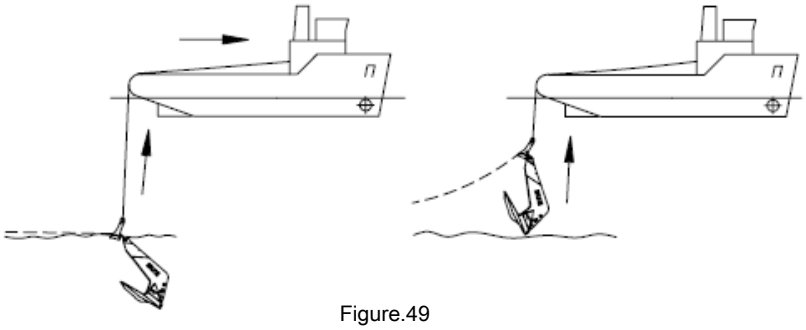

Figure.49

The rig winch now hauls in the anchor chain. The vessel, anchor and chaser are hauled back to the rig winch against the back tension of the vessel thrust. The back tension of the vessel thrust ensures the chaser remains seated on the forward portion of the anchor shank as the anchor chain is hauled in. The pendulum effect of the anchor hanging clear of the propeller wash will prevent turns being inserted in the chain. The rig winch hauls in the anchor chain until the vessel comes within rig crane reach off the bolster bar. The vessel then holds this position.

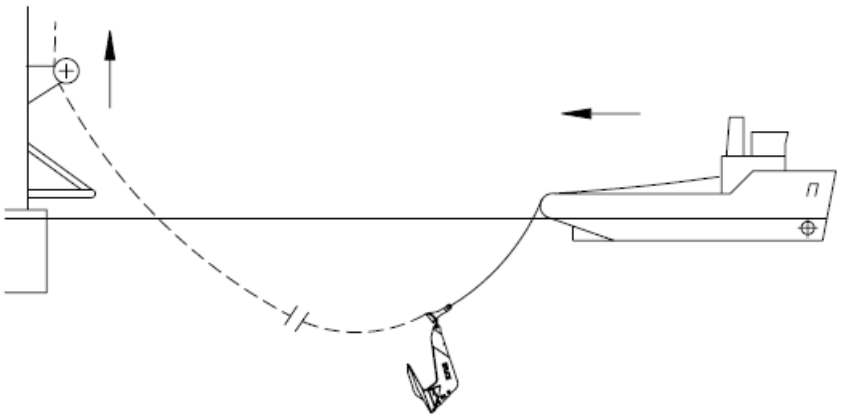

Figure.50

The anchor and chaser are hauled towards the bolster bar by the rig winch while the vessel winch adjusts the paid out length of pendant line accordingly.

Source: NWEA Manual.

* See Figure.49-50 in the list of figures (p.7).

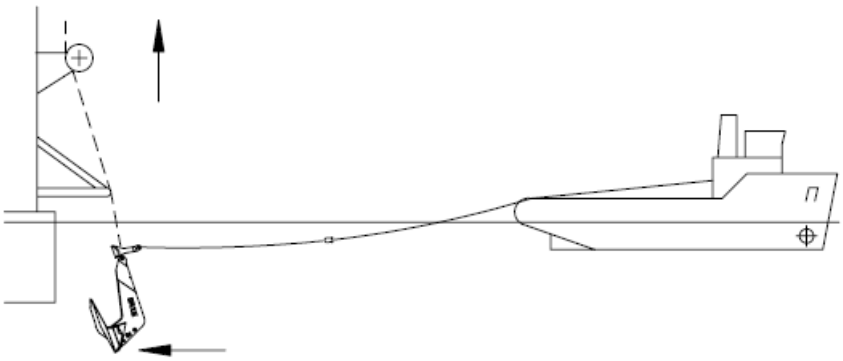

Figure.51

When the forward portion of the anchor shank has cleared the bolster bar, observe the orientation of the anchor as it approaches the bolster bar. If the anchor is hanging with the fluke toward the rig it can be hauled up by the rig winch until it meets with and stows correctly on the bolster bar. The chaser pendant line can now be made fast on the vessel deck, disconnected from the vessel winch, connected to the rig crane and transferred to the rig.

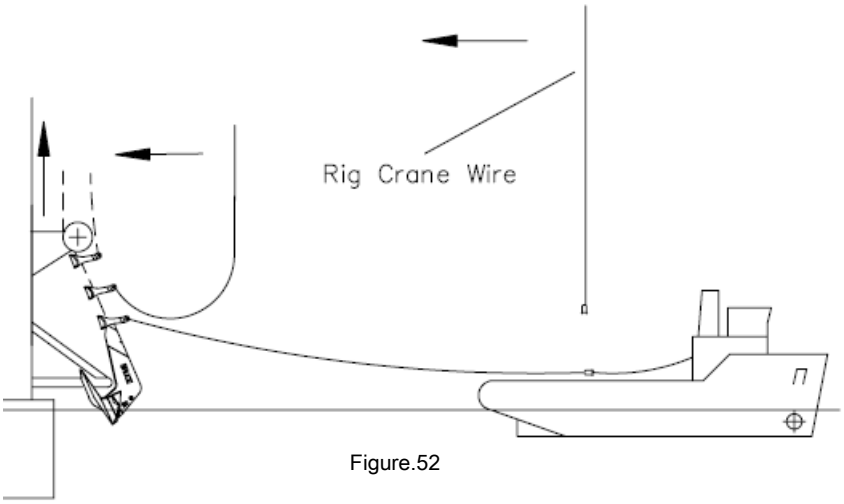

Figure.52

Source: NWEA Manual.

* See Figure.51-52 in the list of figures (p.7).

9. VARIATIONS

In this section, we will talk about the entire relevant anchor handling equipment onboard that we can use during anchor operations different from the normal ones. With this, I mean that sometimes the operation goes different and we have to use special equipment, which has specific propose.

The mid-line buoy

At deployment, the anchor handler takes the anchor from the rig and decks it, using the PCP and collar. The chain or anchor is broken, normally a 77 mm Kenter Link. The rig chain is lockered until the exact point is reached where the chain would be over the pipeline. A chain clamp is fitted and a mid-line buoy, which is designed to take the water pressure, fitted.

Figure.53

Then the chain is paid out as the vessel mover slowly ahead, until the anchor can be reconnected and reset. As the chasing collar cannot be run back to the rig, a previously spooled on pennant wire is attached to the PCP, and the anchor laid under tension, as before. Pennant wires are normally 180 m x 77 mm with peewee sockets on the end. Once the anchor is on the bottom a surface buoy is fitted, and floated. This is replaced by a lay down wire after tensioning, and proving of the anchor's holding are completed. To recover this reverse the procedure, grappling the lay down wire, recovering the anchor, lockering chain until the mid-line buoy comes on deck, when damage to the clamp bolts is often found, then after clamp removal, paying out the lockered chain as the rig heaves in, and connecting the anchor for bolstering.

Source: Own picture.

* See Figure.53 in the list of figures (p.7).

The rope insert

With the development of new rope systems, these are now used offshore. Again, the rig anchor is decked, using the collar and PCP. Once disconnected, the rig chain is lockered, to the correct point, where either a Kenter Link, or chain is cut, and using gas cutting gear. A rope, usually 400 mm x 160 mm with hard eyes, has been previously spooled on.

On each eye is a length of chain which can be connected by kenter link into the chain and then deployed, and the lockered chain and anchor can then be put out again. Again, the collar cannot be run back to the rig, so the anchor must be lowered on a pennant wire, and a buoy fitted, later replaced by a laydown pennant. To recover this, reverse the procedure, grappling for the lay down wire, decking the anchor, lockering the chain until the rope and is in the wire stopper. This rope is buoyant, so ensure some tension is kept on it to prevent propeller fouling.

After recovery of the rope, reconnect the chain, and pay out the lockered chain to the rig when it is heaving in, then connect the anchor for racking. Sometimes rigs have small gypsies, or cable lifters, and a slim line kenter has to be used. This is a special item, supplied by the rig. When spooling the rope on to a drum, care must be taken that there is no sharp metal contact with the rope; either by using a drum with a jewellery box, i.e. a separate section for shackles, eyes etc, or spoolers are used to keep the metallic parts of the eye away from the rest of the rope.

The wire insert

When working in deeper water, more than 500 m, and a normal chain mooring system leads down at an angle of 70 degrees, because of the weight of chain.

This does not give much horizontal position control, so a wire of up to 1.000 m long is inserted in the middle of the chain (weight of 90 mm wire is 40 kg/m against 126 kg/m for chain).

Take the anchor from the rig up on to the deck, disconnect anchor and collar at kenter link, locker the chain to the required point, if a kenter is fitted here open this, or cut the chain, join the end of the insert wire to the chain using a No.7 pear link, pay out the wire on the correct heading, join the other end of the wire to the lockered chain, using another pear link, pay out until the end, reconnect anchor and collar and finally deploy the anchor to the seabed.

As the distance from the rig is much more, use up to 140 T to tension chain before setting anchor. On the arrangement the collar can be run back to the rig, but reduce speed when the collar is passing over the pear links. Prior to running the insert wire it must be tensioned on the winch, to about 40-50 T either by running it from one drum to another, or passing the end to another anchor handler who can steam against it.

The grappling

A grapnel is carried on board, with a notch cut in the flukes to take cables of about 85 mm diameter. This is used for recovering wire or chain from the seabed, especially lay down wires. Always insert a length of chain between the grapnel and the work wire, to force the grapnel flukes in to the bottom, and thus under wires lying there. Put out twice the water depth of work wire, and try to steam across the item to be caught. If it is there you will normally catch it. The problem, especially with lay down wires, is that they are dropped short, so the navigation display is unrealistic.

Figure.54

Source: Own picture.

* See Figure.54 in the list of figures (p.7).

Due to the small weight involved little is shown on winch display, until the wire comes tight heaving in. If recovering a broken chain the grapnel immediately looks on, and tension rapidly rises. Steam slowly away from the rig while recovering, to prevent the chain twisting up, which the work wire tends to cause as load comes on.

The J-hook

A J-hook is carried to pick up chain when a rig chaser cannot be used. Use a piece of chain between the work wire and the hook. If there is good tension on the rig chain, and thus the chain will be leading out at a decent angle, the best method of hooking is to run out 2/3 water depth, and cross the bearing of the chain by 10 degrees, moving at about 2 kts. If the chain is leading 090°, cross it at 100°.

Figure.55

Several tries may be needed before a connection is made. Once connected pay out slowly while moving out on the line of the chain, until water depth of less 10 m is reached. If there is an embedded anchor at the end of the chain, when within 100 m or so of the anchor slack out to 1.4 times water depth, and recover anchor as normal, but decking the anchor, if in deeper water, is best left until the rig has recovered most of the chain, and thus loads are reduced. Often the *Stevpris* anchor comes up on its side, and a lot of chain handling down can put a severe bending force on this. A variation on the J-hook is the locking hook. This has a built up section on the hook, such that the chain is free to run one way, but locks the other. Used for recovering chain or rope combinations where the hook against the rope is to be avoided.

Source: Own picture.

* See Figure.55 in the list of figures (p.7).

10. CONCLUSION

Finally, in this section we will explain the typical or possible problems with the anchors and what are those solutions. In some cases, the anchor can be twist on the astern roller with the mooring line. The vessel winch hauls in the pendant line lifting the chaser and anchor up to the stern roller of the vessel. As the chaser comes on deck turn the vessel so that the anchor chain is pulled to one side of the stern roller away from the suspended anchor. Ensure the anchor chain does not foul the anchor in its suspended position off the stern roller of the vessel. If fouling does occur, lower the anchor and then rehaul it clear of the chain.

The second main problem is when the anchor is not decking in the correct attitude. The anchor is hauled slowly over the vessel stern roller by the vessel winch. If the anchor contacts the roller on its back with the fluke away from the roller, it can be hauled up on deck and made fast, but, if for any reason the anchor does not contact the stern roller in this manner and/or engages on the stern roller, the following steps should be followed. First of all, slack on the pendant line until the anchor falls just clear of the roller. Heave in again on the pendant until the fluke engages firmly with the stern roller. Carry on heaving in so that the chaser rides up the mooring line and pulls a bight of chain up onto the deck of the vessel. When the length of the bight of chain is about 15 feet stop the winch. Later on, make fast the mooring line that leads back to the rig in the stopper. And finally, maintain a tension in the chaser pendant line and attach tugger winch lines by shackles to the shank of the anchor as follows.

Another important thing that we have to take in account is that during anchor decking, should the anchor become engaged or snagged on the stern roller by one of its outer flukes do not try to haul it onboard by simply pulling harder. This will likely damage the vessel roller and may cause some damage to the anchor.

In the event that the anchor does become snagged, lower it back into the water and wash it round with the vessel propellers until it is in the correct attitude for decking, then pull it up again.

To conclude this section I would like to explain a safety note. When the anchor has been decked successfully, the vessel operator must ensure that the chaser is engaged on the anchor shank before the stopper is released from the anchor chain in order to prevent the anchor from being pulled up the deck at a dangerous speed by the weight of chain outboard of the vessel stern roller. Many seafarers died during this operation. This is achieved by heaving in the pendant line to move the anchor slowly up the deck until the anchor shank engages in the chaser. The stopper may now be released and the weight of the chain taken safely by the chaser pendant line. Also I recommend that when anchor is above the deck, one AB wash the anchor with the high pressure fire house to ensure that all the mud, sand and other organisms are clear of anchor.

The item that I would like to make emphasis is about the record keeping. This job is one of the more dangerous operations in offshore industry and when something goes wrong the first thing that the authorities check is the record keeping. The recording of events and retention of logs is of great importance to all operations; these records are vital in the event of any investigation or damage claim. Deck log should be updated frequently. A bridge notebook may be used for recording times during the operation and the main points transferred to the log when convenient. This notebook should have immanently detailing any machinery problems and the starting and stopping of machinery during the operation and the reasons for these events.

Any entries in official documents needing correction should be ruled through with a single line and sign by the officer of the watch in black color pen; correction fluid should not be used.

A detailed log of all relevant times should be kept, these should be addition to normal log-keeping and include but not be limited to:

- Handling of any pennant.
- Anchor on or off bottom.
- Anchor on roller.
- Movements of work-wire when grappling.
- Any damage noted to equipment and which parties informed of damage.
- Chasing movements.
- Where electronic logging is not available details of wire in use and gauge readings should be frequently recorded.

In addition to manual record keeping all available electronic means should be in use. Many items of bridge or engine equipment have recording facilities, some automatic, some requiring to be set. Items which may be fitted to the vessel and able to record information and should be in use include:

- Towcon computer: this should be set to record events at intervals appropriate to the operation in hand e.g. maybe every three minutes during anchor handling or twenty minutes when towing. This will give details including strains and wire lengths from winches.
- CCTV: coverage of the working deck as a minimum. Equipment should be set to record, preferably on loop, before starting any operation. In the event of any incident the recorded data is to be preserved.

  - VDR: where one of these is fitted it will automatically monitor the ship's position and bridge condition but maybe only for 12 hours on a continuous loop. In the event of any incident it is important to ensure that the data is recorded before 12 hours has elapsed.
  - ECDIS: these can be set to record tracks of a number of vessels.
  - ES: this keeps position information.
- Navpac equipment as supplied by the charterer

11. GLOSSARY CONTENT

AHTSV: Anchor Handling Tug Supply Vessel.

BOP: Below Out Preventer.

CTV: Coverage Tele Vision.

DP: Dynamic Position.

DPO: Dynamic Positioning Operator.

ECDIS: Electronic Chart Display and Information System.

ES: Echo Sounder.

GM: Distance between center of gravity and the union force pint.

GZ: Static stability according to the heel values.

Kg: Kilograms.

Kts: knots.

m: Meters.

mm: Millimeters.

NMD: Norwegian Maritime Directorate.

NWEA: North West European Area.

PCP: Permanent Chasing Pennant.

PPE: Personal Protection Equipment.

SWL: Save Working Load.

T: Tones.

UHF: Ultra High Frequency.

VDR: Voyage Data Recorder.

VHF: Very High Frequency.

12. BIBLIOGRAPHY

Finally we will quote all relevant documental sources and webpages has helped me to find all necessary information to perform this project.

12.1 Documental sources

Cap. M. William. *Dynamic Positioning Operator Training-Meeting the need.* Nàutica. Nautical Institute Monograph, 1984.

Centro de simuladores. *DP Operator Manual.* Advanced Course. Nautical Institute. Noviembre, 2011.

Folletos de la Facultad de Náutica de Barcelona (FNB). *Cómo presentar un trabajo.*

Hancox, Michael. *Anchor Handling Manual.* OPL Oilfield Seamanship. Volume Three. ISBN: 1-870945-492. England.

Hartmann Offshore Ltd. *Manofacturing Manuals Onboard.* UOS DISCOVERY, UOS COLUMBIA and UOS VOYAGER.

Maersk Simulator Center. *Anchor Handling Operations*. Online version. Norway.

Marí Sagarra, Ricard. *Maniobra de los buques.* Politext 31. Setiembre 1994, p.137-p.144. ISBN: 84-7653-440-X. Barcelona.

NWEA. *North West European Area Manual.* Onboard publication.

12.2 Web pages

http://www.welschs.cc/dgpse.html (08/10/2014 09:18)

http://www.nauticexpo.es/tab/posicionamiento-dinamico.html (21/10/2014 08:22)

http://www.nautinst.org/en/dynamic-positioning/index.cfm (19/11/2014 18:05)

http://www.geae.com/engines/marine/pdfs (24/11/2014 17:15)

http://www.imca-int.com/documents/divisions/marine-docs.es (25/11/2014 11:53)

http://www.dpoperator.com/Welcome.html (15/12/2014 15:35)

http://www.fugroseastar.com (07/01/2015 18:12)

Final page of courtesy,