Escola Politècnica Superior d'Enginyeria de Vilanova i la Geltrú
UNIVERSITAT POLITÈCNICA DE CATALUNYA

FINAL DEGREE PROJECT

TITLE: DESIGN OF A SPACECRAFT PROTOTYPE FOR INTERSTELLAR TRAVEL USING EXISTING METHODS OF PROPULSION

AUTHOR: BIN WAN ABD MALIK, WAN MUHAMMAD AMIR

DATE OF PRESENTATION: 13 JULY 2021

COGNOMS: BIN WAN ABD MALIK **NOM: WAN MUHAMMAD AMIR**

TITULACIÓ: INGENIERÍA MECÁNICA

PLA: 2014

DIRECTOR: MORENO LUPIAÑEZ, MANUEL

DEPARTAMENT: DEPARTAMENT DE FISICA

QUALIFICACIÓ DEL TFG

TRIBUNAL

PRESIDENT	SECRETARI	VOCAL
NAVARRO BOSQUE, JAVIER	GARGALLO VICENTE, ORIOL	RAMOS LARA, RAFAEL RAMON

DATA DE LECTURA: 13 JULY 2021

Aquest Projecte té en compte aspectes mediambientals: ☐ Sí ☐ No

RESUM

Este trabajo tiene como objetivo diseñar un concepto de nave espacial para viajes interestelares que creo que funcionaría mejor. Antes de diseñar la nave espacial, hice un estudio sobre una amplia gama de diferentes métodos de propulsión. Estos métodos van desde métodos actuales como la propulsión química, nuclear y eléctrica hasta métodos que aún se encuentran en las primeras etapas de desarrollo, como la antimateria, el estatorreactor interestelar y la propulsión de vela solar. También se ha incluido un estudio de diseño de naves espaciales, que van desde naves espaciales existentes como la Saturn V hasta naves espaciales conceptuales como el Proyecto Longshot.

Usaré el software Siemens NX12 para diseñar mi modelo de nave espacial para viajes interestelares. Tras mi humilde enfoque para lograr los viajes interestelares, decidí diseñar un cohete de varias etapas, ya que es más eficiente para el incremento de velocidad de la nave espacial. El modelo de la nave espacial se puede dividir en tres secciones, con diferentes métodos de propulsión respectivamente; etapa inferior (química), etapa superior (fisión nuclear) y última etapa (vela solar).

El enfoque principal del diseño estará en la última etapa, en la que la carga útil de la nave espacial se dirigirá a su destino. La idea de la vela solar depende de los brazos extensibles que se disponen a 90º entre sí para sostener la vela cuadrada en las diagonales. Se incorporaron tres características clave en el diseño de brazos extensibles; *vías*, *correderas* y *válvulas*. Estas características actúan para proporcionar más estabilidad y rigidez en el mecanismo de despliegue de la vela mientras permiten que la vela se estire al máximo.

Hay algunos factores desatendidos en este trabajo, como la viabilidad del método de propulsión. Esto se debe a que es posible que no tengamos el material específico o el avance tecnológico en este momento. La trayectoria de este diseño conceptual de la nave espacial para llegar a su destino elegido, el exoplaneta *TRAPPIST 1-e*, situado a unos 41 años luz de distancia, se mencionará brevemente y no se discutirá en detalle ya que carezco de conocimiento en ese campo en particular.

Paraules clau (màxim 10):

Viaje interestelar	Siemes NX12	Propulsión química	Propulsión nuclear
Vela solar	IKAROS	Saturn V	TRAPPIST 1-e
Prototipo nave espacial			

ABSTRACT

This work aims to design a spacecraft concept for an interstellar journey that I think would work best. Before designing the spacecraft, I did a study on a wide range of different methods of propulsion. These methods vary from current methods such as chemical, nuclear, and electrical propulsion to methods still in the early stages of development, such as antimatter, interstellar ramjet and solar sailing propulsion. A study on spacecraft design has also been included, varying from existing spacecraft such as the Saturn V to conceptual spacecraft such as Longshot Project.

I will be using Siemens NX12 software to design my spacecraft model for interstellar travel. Upon my humble approach to achieve interstellar travel, I decided to design a multistage rocket, as it is more efficient for the spacecraft's velocity increment. The spacecraft model can be divided into three sections, with different methods of propulsion respectively; lower stage (chemical), upper stage (nuclear fission) and last stage (solar sail).

The main focus of the design will be on the last stage, at which the payload of the spacecraft will head for its destination. The idea for the solar sail depends on the *extendable arms* that are arranged 90° from each other to support the square sail on the diagonals. Three key features were incorporated into the *extendable arms* design; *pathways*, *sliders* and *valves*. These features act to provide more stability and rigidity onto the sail's deployment mechanism while allowing the sail to be stretched to the fullest.

There are some factors neglected in this work, such as the feasibility of the method of propulsion. This is because we might not have the specific material or technological advancement in the time being. The trajectory of this conceptual spacecraft design to reach its chosen destination, exoplanet *TRAPPIST 1-e*, situated 41 light years in distance, will be mentioned briefly and will not be discussed in detail as I lack knowledge in that particular field.

Keywords (10 maximum):

Interstellar journey	Siemens NX12	Chemical propulsion	Nuclear propulsion
Solar Sail	IKAROS	Saturn V	TRAPPIST 1-e
Spacecraft prototype			

INDEX

LIST OF FIGURES

LIST OF TABLES

GLOSSARY

ACRONYMS

NASA	National Aeronautics and Space Administration
SRB	Solid Rocket Booster
MPS	Moteur a Propergol Solide
NERVA	Nuclear Engine for Rocket Vehicle Application
LEO	Low Earth Orbit
SPT	Stationary Plasma Thruster
NIAC	NASA Institute for Advance Concept
JAXA	Japan Aerospace Exploration Agency
IKAROS	Interplanetary Kite-craft Accelerated by Radiation Of the Sun
RCD	Reflective Control Device
IHP	Interstellar Heliopause Probe

UNITS

kg	Kilogram
g	Gram
MN	Mega Newton
km	Kilometres
m/s	Metre per second
K	Kelvin
MeV	Mega electron volts
m	Metre
Hz	Hertz
N	Newton
km/s	Kilometre per second

m/s^2	Metre per second squared
^oC	Degree Celsius
eV	Electron volts
kW	Kilowatt
V	Volts
mN	Milli-Newton
c	Speed of light
kg/m^3	Kilogram per metre cubic
$atom/cm^3$	Number of atoms per centimetre cubic
km^2	Kilometre squared
W/m^2	Watt per metre squared
AU	Astronomical Unit
N/m^2	Newton per metre squared
µm	Micrometre
rpm	Revolution per minute
mm/s^2	Millimetre per second squared
g/m^2	Gram per metre squared
g/cm^3	Gram per centimetre cubic
GPa	Giga Pascal
m^2	Metre squared
s	Seconds
ly	Light years

SYMBOLS

F	Thrust (N)
$\dot{m}$	Mass flow rate (kg/s)
V_e	Exhaust velocity (m/s)
V	Rocket velocity (m/s)

M_o	Initial mass of rocket (kg)
M	Final mass of rocket (kg)
P	Power (W)
$\frac{q}{M}$	Charge to mass ratio (C/kg)
V_1	Potential drop (V)
S_r	Solar Irradiance (W/m^2)
P_{rad}	Solar Pressure (N/m^2)
r	Distance (m)
μ	Sail reflectivity
σ	Sail loading (g/m^2)
a_c	Characteristic acceleration (m/s^2)
G	Gravitational constant (N/kg^2m^2)
$M_\oplus$	Mass of Earth (kg)
m	Orbiting mass of spacecraft (kg)
V_{circ}	Circular orbit velocity (m/s)
e	Eccentricity
r_o	Orbital radius (m)
V_{esc}	Escape velocity (m/s)
R	Mass ratio
M_s	Structural mass (kg)
M_f	Fuel mass (kg)
M_p	Mass of payload (kg)
A	Area (m^2)
V_o	Velocity of rotation (m/s)
S	Displacement (m)
a	Acceleration (m/s^2)
t	Time (s)
u	Initial velocity (m/s)

1. INTRODUCTION

Throughout history, we have learned that the progress of human civilization is somewhat linked to transportation. Humans have used animals such as horses, camels, donkeys, etc. as a means of transport in the early days. These 'vehicles' simply rely on the physical abilities of the animal itself thus having a limit to the speed and power of the 'vehicle'. However, since the invention of wheels, we have adapted to using this kind of 'technology' in our means of transportation by making carriages for example. A carriage can carry several people at a time depending on the size, while a horse is only capable of carrying two people at maximum. However, a carriage would require at least a couple of horses as its power supply to reach a decent speed for the passengers. Since then, other types of transport have been invented, such as the bicycle, which uses the approach of gears to rotate the wheels. As harmless as a bicycle may sound, it was once used as a medium of transportation by the Japanese military to invade some parts of the Southeast Asian countries such as Southern Thailand and Malaysia. On top of that, war plays a big role in the transformation of vehicles as scientists were pressured to weaponize air, land, and water vehicles by using their extensive knowledge in science during both World War I and II and the Cold War. Consequently, these scientific learnings have opened new opportunities for humans to use science for greater purposes.

In the 20th century, motor vehicles have revolutionized transport. This has led to the rapid growth in land and air vehicles in both war and commercial use. At first, the rocket was the emerging revolution in transport as they are able to achieve high velocity and cover greater distances. Nonetheless, only a few have successfully travelled in one. This is due to the drawbacks such as the amount of money needed in building such an advanced vehicle. Besides that, the materials used in a rocket-propelled vehicle are also a drawback factor. For an instant, the type of chemical fuel used in the engine for the rocket propulsion may cause corrosion to the vehicle and might bring harm to the environment itself. Therefore, modern spacecraft are made to be more cost-effective and reliable for the manned programme. This means that the component and construction of the vehicle have to be of the best quality to avoid any casualties at the same time cutting the budget for space missions.

Recent technological breakthroughs have made aircraft vehicles essential for placing satellites in outer space for communication purposes. The basic communication tool in the 21st century, the telephone or smartphone depends on the satellite. From making a simple phone call, surfing the Internet, sending a message or an image, our information travels from one part to another via the telecommunication satellite in space. In addition to that, aircraft vehicles used in space have also made us understand more about other planets and solar systems in the universe. Scientists have made major discoveries in previous space exploration missions in our inner solar system such as the ones to the Moon and Mars. Some of these space missions carried smaller vehicles to be left behind such as the Curiosity Rover, Mars Pathfinder, and Perseverance Rover to transfer data of views and videos from the rover itself. The latest rover, Perseverance Rover, was launched on July 30 2020 and successfully landed on Mars the following year on February 18 according to NASA. Moreover, NASA has successfully placed the Insight Lander on the surface of Mars to study its interior structure that might answer the key questions about the early formation of the planet.

These data are also used by scientists to search for any signs of life in order to make other planets inhabitable to humans for future generations. Although we are nowhere near space colonization, these data will make us have a greater understanding of the other planets' environment so that we will be more prepared for such missions.

The main purpose of this work is to design a spacecraft prototype that is suitable for the interstellar journey. Interstellar journey is the travel by a spacecraft between stars or other planetary systems in a galaxy. Before designing the spacecraft, a thorough study on current existing methods of propulsion based on successful missions in the past has been carried out. In this study, the exhaust velocity, dependability and longevity of the spacecraft will be considered. Previous spacecraft designs from successful space programmes will be reviewed to give ideas for the spacecraft prototype. This includes the component and features used in the previous spacecraft that will help for the interstellar journey.

As a mechanical engineering student, I will design a prototype that I think is suitable for an interstellar journey based on the previous studies. In addition, I will explain using the concept of Physics to break down how the spacecraft will work. However, I will neglect the mentioned drawbacks such as the funds needed and the limitations of material used to build the prototype itself. This work will solely focus on the design and the best propulsion mechanism to be installed on the prototype. Environmental space obstacles for interstellar flight such as cosmic radiation, charged particle from solar wind etc. will be ignored as I lack knowledge in those fields.

2. OBJECTIVES

The objective of this work is to use the concept of Physics to explain how the spacecraft prototype will work. By discarding certain factors, it will ease in the designing the spacecraft and for the later explanation of its propulsion mechanism.

The propulsion mechanism of the spacecraft prototype will be justified based on previous studies by scientists. When the requirements for space exploration are fulfilled, the prototype will be able to be set flight.

- Studying on existing methods of propulsion of spacecraft for interstellar journey
- Making an analysis of existing designs of spacecraft to understand the requirements needed for space missions
- Comparing the different methods of propulsion for interstellar journey taking into account the exhaust velocity and its reliability
- Studying the requirements to leave earth's orbit and gravitational field for deep space exploration
- Study the materials and fuels required to build the prototype with maximum efficiency
- Carry out a design of the prototype and its flight mechanism taking into account of previous studies
- Explaining how the spacecraft prototype with its propulsion mechanism will be able to reach its destination

These objectives will clearly guide the readers regarding the flow of this project, to design a prototype spacecraft that is reliable for the interstellar journey.

3. INVESTIGATION OF STATE OF ART

In this section, we will analyse the different methods of propulsion for spacecraft that have been used and those still under development. Efficiency in the propulsion mechanism plays a crucial role as well as the design structure itself to ensure a successful mission for an interstellar journey. These different methods of propulsion will give different values in velocity achieved and their respective advantages and limitations. We would also consider methods that may sound impossible due to the lack of technological advancement to harvest the newer form of energy; however, note that we will not disregard these possibilities. An aircraft vehicle was once an impossible form of transportation to humans since they have been reliant on animals and watercraft as their main transport to migrate from one place to another. Therefore, we cannot underestimate the power of science and the possibility of these 'impossible' methods of propulsion.

Despite the fact that the invention of a rocket has existed for the past several centuries, Konstantin Tsiolkovsky (1857 – 1935), a Russian scientist, had an extensive understanding of the dynamics and motion of the rocket [1]. Consequently, he saw the opportunity to use the rocket for another purpose instead of as a heavy artillery weapon with minimal accuracy. As a matter of fact, he suggested the rocket as the means of transport for humanity to explore space.

The basis of spacecraft propulsion is by generating thrust from a reaction to give a lift to the vehicle so that it does not fall. The engine of the spacecraft produces a propulsive mechanism in order to provide movement to the vehicle. A rocket is a device that propels itself into space by emitting a jet of matter as a result of a reaction. The momentum carried away by the jet results in a force, acting so as to accelerate the rocket in the opposite direction to that of the jet [1].

Although this concept sounds familiar for all engine vehicles, albeit from cars to aeroplanes, the principle is related to Newton's Third Law of motion, the principle of conservation of momentum; for every action, there is an equal and opposite reaction. However, the dynamics of a rocket is somewhat different to other vehicles since the mass is decreasing as the jet matter is projected rearwards. The force that projects the exhaust is the same force that propels the rocket [1]. To have a better understanding of this, we can compare a rocket to a common vehicle, a car for example. The dynamics of the car depends on the reliability of the engine to convert the burnt fuel to propel itself in a linear motion. Yet, the mass of fuel required to propel the car is much less than the mass of the car itself, this includes the mass of the engine, unfuelled gas tanks, body etc. This is also known as the dry mass of the car (unfuelled vehicle). On the other hand, for a rocket used in space exploration, the mass of the fuel dominates the dry mass of the spacecraft. As the fuels are burnt in the engine to propel the spacecraft, the total mass of the spacecraft itself is continuously reducing. Therefore, the rocket is experiencing a continuous propulsive force, so its flight will be different to other vehicles that lose their energy and velocity due to drag force or friction. The rocket principle is the basis of all propulsion in space, and all launch vehicles [1].

Based on Tsiolkovsky's rocket equation, the accelerating force of a rocket is represented by Newton's law, given by:

$$F = \dot{m} v_e \tag{1}$$

The thrust of the rocket is put in terms of mass flow rate $\dot{m}$, and the exhaust velocity v_e. The energy released from the burning propellant would then accelerate the rocket in the opposite direction. The velocity of the rocket could be calculated by the following equation:

$$V = v_e \log_e \frac{M_0}{M} \tag{2}$$

M_0 is the initial mass or mass at ignition, and M is the current mass of the rocket. The ratio of initial to current mass is known as the mass ratio R. As we can see, the final speed of the rocket only depends on the exhaust velocity and the mass ratio. A higher exhaust velocity certainly produces higher rocket velocity.

Another approach to generate a greater rocket velocity is by optimising the mass ratio. The mass ratio can be described as the fully fuelled vehicle (vehicle + propellant) mass to the vehicle mass or dry mass. As all the propellant will be exhausted during the mission, a lighter vehicle mass will make it able to travel at much greater speeds. Therefore, the design of the spacecraft must be as light as possible.

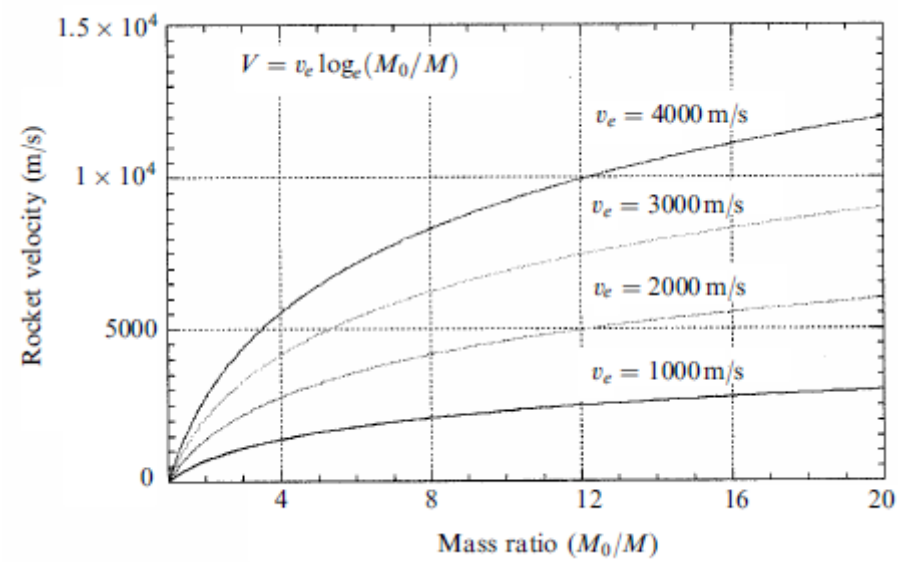

Figure 3.1 Tsiolkovsky's rocket equation. Source: [1]

3.1 CHEMICAL PROPULSION

A chemical engine propulsion method converts the heat generated in the combustion chamber from the burning of the propellants (fuel and oxidizer). This energy is then transformed to kinetic energy of the spacecraft from the exhaust gas. The exhaust gas gives momentum to the vehicle thus making it able to gain thrust and acceleration. It is the expansion of the hot gas against the walls of the nozzle which does work and accelerates the rocket [1].

Any chemical reaction that produces heat can be a source of fuel for a chemical engine of a spacecraft. Liquid oxygen and hydrogen is one of the most common fuel sources in the earlier ages of spacecraft development. The gas containing the energy released from the chemical reaction is transformed into velocity. This is a result as the gas expands and cools while it passes through the nozzle. The velocity rises very rapidly, passing the speed of sound (for the local conditions) as it crosses the 'throat' or the narrowest part of the nozzle. The thermodynamic approach to this will involve equations related to the internal and kinetic energy in the gas, and the equation of continuity for the gas flow through the nozzle [1].

3.1.1 LIQUID PROPELLANT ENGINES

The basic configuration of liquid propellant engines consists of a fuel and oxidizer tank, combustion chamber, nozzle and together with other means to deliver the propellant to the combustion chamber. In some cases, there are turbo pumps installed in the engine. This is to pump the propellants (fuel and oxidizer) to the combustion chamber with greater performance. Propellant combustion requires high temperature to generate high thrust for the spacecraft, therefore, a cooling system should be taken into account in order to avoid any deterioration of the combustion chamber and nozzle. The fuel and oxidizer are stored in separate tanks in the form of liquid, to prevent any formation of explosive mixtures. The tanks need to have strong walls to resist the high static pressure, and this reduces the mass ratio [1]. Since combustion takes place in the engine to generate thrust, an oxidizer tank is carried inside the rocket since there is no atmosphere to provide oxygen in space.

The working principle of a liquid propellant engine is quite easy to understand. With the help of turbo pumps, the fuel and oxidizer are delivered into the injector. The injector helps to convert the liquid propellant into small droplets, it is then sprayed to the combustion chamber and the flow of the injector is controllable. Inside the combustion chamber, an ignitor generates a spark with the help of an electrical supply on board. Upon contact, the mixture of droplets in liquid propellants undergoes combustion. Subsequently, high pressure and temperature of the gas are produced. This gas product is allowed to expand in the nozzle section. The pressure energy of the gas is converted to the kinetic energy of the spacecraft in the nozzle. Since the gas coming out with high velocity from the nozzle, a thrust will produce to propel the spacecraft in the opposite direction.

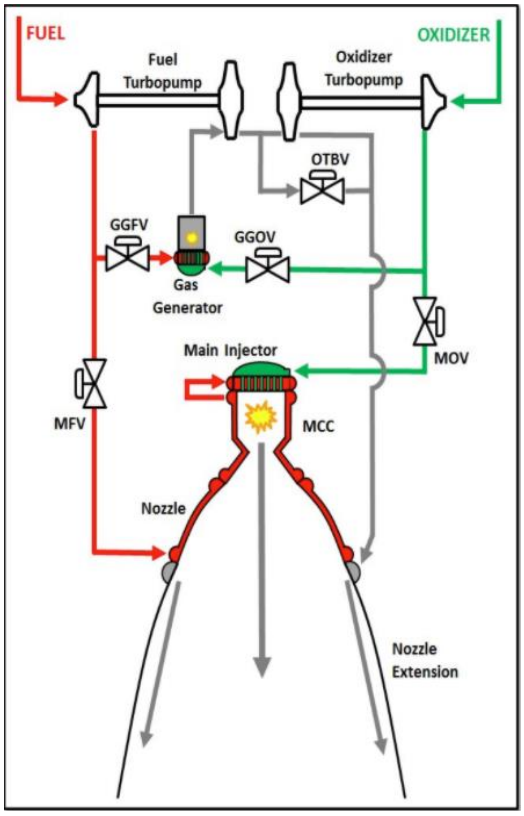

MCC = Main Combustion Chamber

GG = Gas Generator

MFV = Main Fuel Valve

MOV = Main Oxidizer Valve

GGFV = Gas Generator Fuel Valve

GGOV = Gas Generator Oxidizer Valve

OTBV = Oxidizer Turbine Bypass Valve

Figure 3.2 Schematic diagram of a liquid propellant engine. Source: NASA [2]

NASA's famous Apollo programme uses this approach in using a liquid propellant engine in their space missions to the Moon. On the launch pad, the Saturn V consist of three stages. In the first stage of flight, the spacecraft had five F-1 engines burning liquid oxygen and kerosene; the second stage had five J-2 engines burning liquid oxygen and liquid hydrogen, while the third had a single J-2 engine [1]. The Saturn V weighed 2.8 million kilograms fully fuelled ready for lift-off. Despite having an enormous mass, it is able to generate 34.5 MN of thrust at launch, a tremendous power greater than that of 85 Hoover Dams. During the first stage, the spacecraft was lifted up to about 68 kilometres, the second stage carried the spacecraft close into orbit and finally, the third stage placed the Apollo spacecraft into the Earth orbit and pushed it to the Moon [3].

More recent launchers are designed with the technology available to increase its efficiency of the spacecraft for space missions. The exhaust velocity and thrust depend on the square root of the combustion temperature; therefore, the fuel plays an important factor in increasing the efficiency of the spacecraft. This is due to the chemical properties of the fuel, which depends on the chemical energy released by the reaction: the more energetic the reaction, the higher the temperature [1]. Adding to this, the nozzle design should be able to expand in order to maximise the exhaust velocity. The Vinci cryogenic upper-stage engine for Ariane 5 is able to achieve an exhaust velocity of 4650 m/s. This is all thanks to the efficient regenerative cooling and an expansion ratio of 240 (achieved by a deployable nozzle extension) [1]. This velocity is much higher when compared to the Aestus engine on Ariane 5 which has an exhaust velocity of 3240 m/s.

When discussing the fuel for the liquid propellant engine, its molecular weight is an important factor in increasing the engine's efficiency. Since the thrust depends on the mass flow rate, heavier molecular weight of liquid propellant may produce a higher mass flow rate in comparison to a lighter propellant. Hydrogen is an example of a light molecule and it is famous for leaking through materials. Therefore, when using a liquid propellant engine, a system is needed to remove all atmospheric gases to prevent the freezing and blocking of any aperture in the engine. Liquid oxygen has a vapour pressure of 1 bar at a temperature of 90K, and liquid hydrogen has the same vapour pressure at 20K [1].

Figure 3.3 Saturn V on the launch pad ready for flight. Source: NASA [4]

Oxidant	Fuel	Ratio(4) (O/F)	T_c (K)	Density (mean)	c^* ($m\,s^{-1}$)	v_e ($m\,s^{-1}$)
O_2	H_2	4.83	3,251	0.32	2,386	4,550
O_2	RP1(1)	2.77	3,701	1.03	1,783	3,580
F_2	H_2	9.74	4,258	0.52	2,530	4,790
N_2O_4	MMH(2)	2.37	3,398	1.20	1,724	3,420
N_2O_4	N_2H_4 + UDMH(3)	2.15	3,369	1.20	1,731	3,420

(1) RP1 is a hydrocarbon fuel with hydrogen/carbon ratio 1.96, and density 0.81.
(2) MMH is monomethyl hydrazine.
(3) UDMH is unsymmetrical dimethyl hydrazine.
(4) The mixture ratios are optimised for expansion from 6.8 bar to vacuum.

Table 3.1 Combustion temperature and exhaust velocity for different propellants. Source: [1]

3.1.2 SOLID PROPELLANT ENGINES

A solid propellant engine is thermodynamically similar to a liquid propellant engine; the hot gas produced from the process of combustion is transformed into a high-speed jet stream, which then propels the spacecraft in the opposite direction. In general, the solid propellant is storable, relatively safe to handle and does not require any delivery system. When comparing this to a liquid propellant engine, a solid propellant engine is much simpler concerning its design and development. With that being mentioned, this produces a major improvement with the reliability and cost. However, there is always a drawback in any design, in this case, the engine cannot be controlled once ignited and the low chemical energy released from the reaction of the solid propellant.

The basic configuration of a solid propellant engine is a casing, ignitor, grain and nozzle. The grain is a hollow surface of the solid fuel block where combustion occurs and produce hot gas. In common, the grain is bonded to the wall of the combustion chamber in order to avoid the access of the hot combustion gas to any other surface of the grain that is not intended to be burnt and also to prevent any damage from the heat to the combustion chamber walls. While the propellant and oxidizer are stored in separate tanks for a liquid propellant engine, the grain contains both fuel and oxidizer. The grain is in a finely divided powder form, mixed and held together by a binder material [1]. Once ignited, the engine produces a continuous thrust until the grain is exhausted.

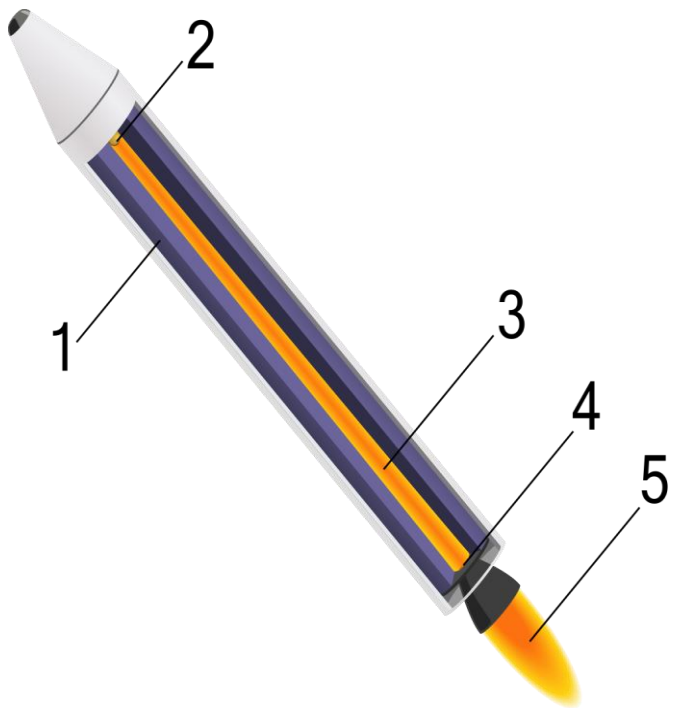

1. A solid fuel-oxidizer mixture (propellant) is packed in the rocket, with a cylindrical hole in the middle.
2. An ignitor combusts the surface of propellant.
3. The cylindrical hole in the propellant acts as a combustion chamber
4. The hot exhaust is chocked at the throat, which, among other things, dictates the amount of the thrust produced
5. Exhaust exits the rocket.

Figure 3.4 Schematic diagram of a solid propellant engine. Source: [5]

A solid propellant engine has a few applications, a propulsion mechanism for a small and medium-sized launcher and typically used in a third stage for the injection into orbit. Two areas in which a solid propellant engine excel are as strap-on boosters and as upper stages. Since the energy released from the combustion of solid propellant is lesser than that of liquid propellant, the exhaust velocity produced is not very high. The most advanced types can produce about 2700 m/s [1]. However, the absence of complicated systems of pipeline and valves, turbo pumps and separate tanks produces a high mass ratio and cost-effective. Adding to this, the dead weight of a solid stage is just the casing and nozzle, while the dead weight of a liquid stage includes the turbo pumps and two empty tanks for the propellants. The casing is usually made of a composite material thus reducing the mass even more.

Two solid modern boosters are those from the Space Shuttle and Ariane 5. The Space Shuttle SRB (*Solid Rocket Booster*) develops a thrust of around 10 MN. The casing for the SRB comprises eight steel segments flow-turned with flanges. On the other hand, the nozzle of the SRB is made of layers of glass and carbon fibre material bonded together to create a tough composite material. This material is able to withstand extreme temperatures up to 4200K. Once jettisoned, the casing is recovered from the sea. They are then cleaned and inspected. The post-flight inspection of the casing is to ensure that they are functioning correctly throughout the flight. If the casing of the engine doesn't sustain any severe damage during impact with the sea, they can be reused.

The Ariane MPS (*Moteur a Propergol Solide*) is similar to that of SRB in many ways. While the SRB has a 5-metre diameter, the MPS has a 3-metre diameter and generates a thrust at nearly 6 MN. The propellant is very similar, with a slight level difference of percentage in the composition of ammonium perchlorate oxidant and aluminium powder fuel. For the nozzle, the MPS uses a composite material incorporating carbon-carbon and phenolic silica materials and supported by a lightweight metallic casing. These boosters are eminently recoverable, and their reuse is a factor in the economics of launchers [1]. The next step is to develop fully reusable launchers to make space exploration more accessible to others.

	SRB (Space Shuttle)	MPS (Ariane 5)
Thrust (individual)	10.89 MN	5.87 MN
Thrust (fractional)	71% at lift-off	90% at lift-off
Expansion ratio	11.3	≈10
Exhaust velocity	2,690 m s^{-1}	2,690 m s^{-1}
Temperature	3,450	3,600
Pressure	65 bar	60 bar
Total mass	591 T	267 T
Propellant mass	500 T	237 T
Dry mass	87.3 T	30 T
Burn-time	124 s	123 s
Charge shape		
Upper section	11 point cog	23 point cog
Middle section	Truncated cone	Cylinder
Lower section	Truncated cone	Truncated cone
Propellant	Ammonium perchlorate 69.6%	Ammonium perchlorate 68%
	Aluminium powder 16%	Aluminium powder 18%
	Polymeric binder 14%	Polymeric binder 14%
	Additive iron oxide 0.4%	
Factory joints	4	6
Field joints	3	2
Length	45.4 m	27 m
Diameter	3.7 m	3.0 m
Casing	Steel 12 mm	4SCDN-4-10 steel

Table 3.2 Comparison between SRB (Space Shuttle) and MPS (Ariane 5). Source: [1]

3.2 NUCLEAR PROPULSION

At the beginning of the twentieth century, the idea of using nuclear energy for rocket propulsion started to emerge. Robert Esnault-Pelterie was giving a paper at the French Physics Society in which he identified the release of 'infra-atomic energy' as the only solution to long interplanetary voyages [1]. This was before the famous Einstein's equation of energy to mass, published in 1905. Henceforth, the idea of using nuclear energy for interplanetary voyages become more popular alongside the development of chemical energy. Nuclear fuel has a very high specific energy and became the obvious choice. For launching, particularly for the earlier stages of a multistage spacecraft, it is the power generated that is important.

$$P = \frac{1}{2}\dot{m}v_e^2 \quad \textbf{(3)}$$

P represents the power in the exhaust stream, while $\dot{m}$ represents the mass flow rate. (100% efficiency assumption)

$$F = \dot{m}v_e \quad \textbf{(4)}$$

Rearranging $\dot{m}$ and substituting it in the equation **(4)**, gives:

$$F = 2\frac{P}{v_e} \quad \textbf{(5)}$$

Consequently, we can see from these equations that the thrust depends on the power dissipated from the nuclear engine and inversely proportional to the exhaust velocity.

Nuclear propulsion can be mainly divided into two; nuclear fission and fusion. In nuclear fusion propulsion, it is the combination of two light isotopes to release energy. The majority of fusion reactants are normally the isotopes of hydrogen; deuterium and tritium. Isotopes of helium are commonly used as well, such as helium-3 (He^3) and helium-4 (He^4). On the other hand, nuclear fission is the splitting of a large nucleus into smaller fragments to release energy. In principle, the absorption of a neutron in the nucleus is what causes it to split into two nuclei, with a certain amount of energy released. These nuclear reactions will be discussed further in this chapter.

3.2.1 NUCLEAR FISSION PROPULSION

In the year 1939, Hahn and Strassmann discovered about nuclear fission in Germany. A few years later, Fermi and colleagues built the first nuclear reactor at the University of Chicago in a squash court. They investigated that the energy released from the absorption of a neutron by a uranium nucleus, causing it to split into two is around 200 MeV. A huge amount of the energy released is in the form of kinetic energy in the fission fragments, with a smaller fraction released in gamma rays.

For the nuclear fission of uranium, two or more neutrons are given off as a result of the fission reaction itself. These emitted neutrons then can go interact with another uranium nucleus and cause it to split. Eventually, this will create a chain reaction as more neutrons are released due to fission reaction, and these neutrons will interact with another uranium nucleus. The energy released in the fission fragment velocity is very quickly converted into heat, as the fragments slow down in the uranium [1]. During controlled nuclear fission, the uranium becomes very hot. In order to harvest the energy released in the reaction, the uranium must be cooled down and use the heat extracted to provide power. For a rocket, the cooling of uranium is achieved by using the propellant, which passes through the reactor and out through the nozzle.

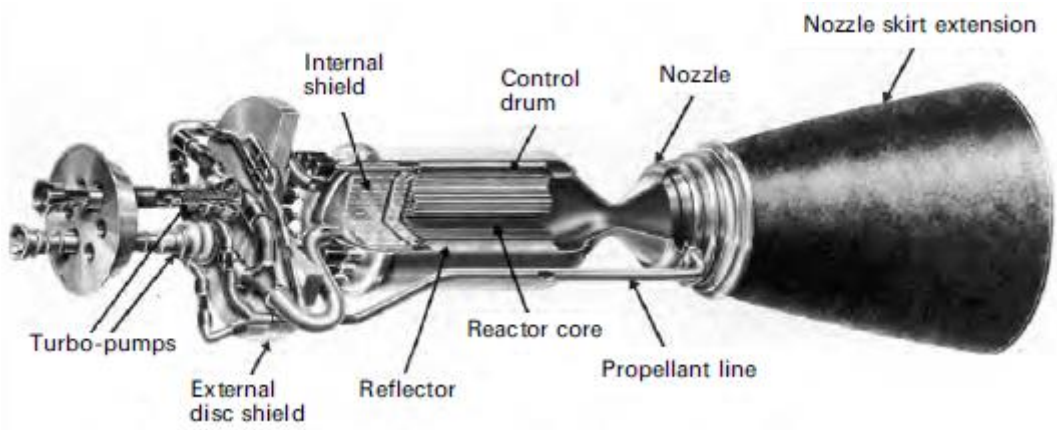

Figure 3.5 Drawing of a NERVA nuclear rocket engine. Source: [1]

As we are aware, a nuclear reaction will inevitably release radiation. While in operation, the core will emit a high flux of neutrons and gamma rays, both of which are penetrating. The radiation released is very harmful especially to the human body. It is known that radiation may kill or transform the cell in our body. As a result, the radiation can cause health effects such as skin burns. Furthermore, it can also cause long-term health effects if exposed to very high levels of radiation such as cancer and heart diseases. For a manned space mission, the safety of the crew is the top priority and therefore extensive safety measures must be taken into account to protect the crew members.

Besides that, huge efforts have been made to impede erosion, due to its damaging effect on the durability of the engine. Nevertheless, it is quite clear that a nuclear engine cannot be operated in the atmosphere [1]. One main challenge is to avoid the engine becoming a hazard after use; the engine is not radioactive unless it has been operated. The firing of a nuclear engine must be carried out at high Earth orbit because there is a chance of re-entry and contamination of the atmosphere.

Parameters	NRX XE	NERVA 1	New designs based on NERVA		
Fuel rods	UO_2 beads embedded in graphite	UO_2 beads ZrC coat, embedded in graphite	$UC_2 + ZrC + C$ composite	$UC_2 + ZrC$ all carbide	$UC_2 + ZrC + NbC$ all carbide
Moderator	Graphite	Graphite + ZrH	Graphite + ZrH	Graphite + ZrH	Graphite + ZrH
Reactor vessel	Aluminum	High-strength steel	High-strength steel	High-strength steel	High-strength steel
Pressure (bar)	30	67	67	67	67
Nozzle expansion ratio	100 : 1	500 : 1	500 : 1	500 : 1	500 : 1
I_{sp} (s)	710	890	925	1,020	1,080
Chamber temperature (K)	2,270	2,500	2,700	3,100	3,300
Thrust (kN)	250	334	334	334	334
Reactor power (MW)	1,120	1,520	1,613	1,787	1,877
Engine availability (yr)	1969	1972	?	?	?
Reactor mass (kg)	3,159	5,476	5,853	6,579	?
Nozzle, pumps, etc., mass (kg)	3,225	2,559	2,559	2,624	?
Internal shield mass (kg)	1,316	1,524	1,517	1,517	?
External shield mass (kg)	None	4,537	4,674	4,967	

Table 3.3 Nuclear thermal rocket engine schemes based on the NERVA programme. Source: [1]

3.2.2 NUCLEAR FUSION PROPULSION

As discussed before, nuclear fusion is the combination of two lighter isotopes to release energy. Neutrons and protons are the common products of a fusion reaction. Although fusion reactions will produce a large neutron flux, the half-life of the radioisotopes produced from these reactions is much less than that of a fission reaction. For a deuterium-tritium (DT) reaction, it is expected to be around 100 times bigger than for a fission reaction. The main reactions involving the main fusion reactants are:

$$\text{DT:}\quad H^2 + H^3 \rightarrow He^4(3.52MeV) + n(14.06MeV) \Rightarrow 17.58MeV/reaction$$
$$\text{DHe}^3\text{:}\quad H^2 + He^3 \rightarrow He^4(3.67MeV) + p(14.67MeV) \Rightarrow 18.34MeV/reaction$$
$$\text{DD:}\quad H_1^2 + H_1^2 \rightarrow H^3(1.01MeV) + p(3.03MeV) \Rightarrow 4.04MeV/reaction$$
$$\text{DD:}\quad H_1^2 + H_1^2 \rightarrow He^3(0.82MeV) + n(2.45MeV) \Rightarrow 3.27MeV/reaction$$

Figure 3.6 Main nuclear fusion reactions. Source: [6]

For those unfamiliar with the unit of measure MeV, it is Mega Electron-Volts, used as a unity of energy. 1 eV is equivalent to 1.602 x 10^{-19} Joules. Referring to the figure above, a DT fusion reaction requires the least amount of temperature for ignition, followed by DHe^3 and DD reactions. What is fascinating about fusion propulsion is that it has the ability to generate high specific power at the same time providing a high exhaust velocity. Chemical propulsion cannot provide high values for both power and exhaust velocity. Power levels between 1 – 10 kW/kg are expected for a fusion reaction.

Propellant	Reaction products	Exhaust velocity (km/s)	Specific impulse (million s)
DT	He^4 + p	26,400 (8.67%c)	2.64
DHe^3	He^4 + p	26,500 (8.88%c)	2.65
DD	T + p	13,920 (4.64%c)	1.39
DD	He^3 + n	12,510 (4.17%c)	1.25

Table 3.4 Fusion reaction performance. Source: [6]

Associates of the British Interplanetary Society designed a nuclear fusion based interstellar probe called Project Daedalus between the years 1973 to 1978. It was based on three guidelines; firstly, the spacecraft was to be designed using current or near future technology. Secondly, designing a simple unmanned vehicle that was undecelerated flyby mission of a target destination, in this case, Bernard' Star that is 6 light years away from Earth. The vehicle must also return useful scientific data to Earth. Lastly, the mission was to be completed within the working lifetime (40-50 years). This was a theoretical study focusing on proving the possibility of interstellar travel in principle.

Ultimately, the Daedalus Project design was a two-stage configuration carrying 50,000 tonnes of DHe^3 propellant [7]. Daedalus was powered by electron driven Inertial Confinement Fusion (ICF) to implode the pellets at a frequency of 250 Hz [7]. The vehicle was 190 m in length and weighed around 54,000 tonnes with a payload of 450 tonnes. The first stage of this vehicle would generate a thrust of 754,000 N up to a speed of 7% of light. The following stage would produce a thrust of 663,000 N up to a speed of 12% of light. The vehicle would then cruise with a velocity of 36,000 km/s and reach its destination in around 46 years. The products of the fusion reaction of DHe^3 are proton and He^4 (refer to figure 3.6). These products are then channelled for thrust using a magnetic nozzle.

Parameter	1st stage value	2nd stage value
Propellant mass (tonnes)	46,000	4000
Staging mass (tonnes)	1690	980
Boost duration (years)	2.05	1.76
Number tanks	6	4
Propellant mass per tank (tonnes)	7666.6	1000
Exhaust velocity (km/s)	1.06×10^4	0.921×10^4
Specific impulse (million s)	1.08	0.94
Stage velocity increment (km/s)	2.13×10^4 (0.071c)	1.53×10^4 (0.051c)
Thrust (N)	7.54×10^6	6.63×10^5
Pellet pulse frequency (Hz)	250	250
Pellet mass (kg)	0.00284	0.000288
Number pellets	1.6197×10^{10}	1.3888×10^{10}
Number pellets per tank	2.6995×10^9	7.5213×10^9
Pellet outer radius (cm)	1.97	0.916
Blow-off fraction	0.237	0.261
Burn-up fraction	0.175	0.133
Pellet mean density (kg/m^3)	89.1	89.1
Pellet mass flow rate (kg/s)	0.711	0.072
Driver energy (GJ)	2.7	40
Average debris velocity (km/s)	1.1×10^4	0.96×10^4
Neutron production rate (n/pulse)	6×10^{21}	4.5×10^{20}
Neutron production rate (n/s)	1.5×10^{24}	1.1×10^{23}
Energy release (GJ)	171.82	13.271
Q-value	66.6	33.2

Table 3.5 Performance parameters for Project Daedalus. Source: [7]

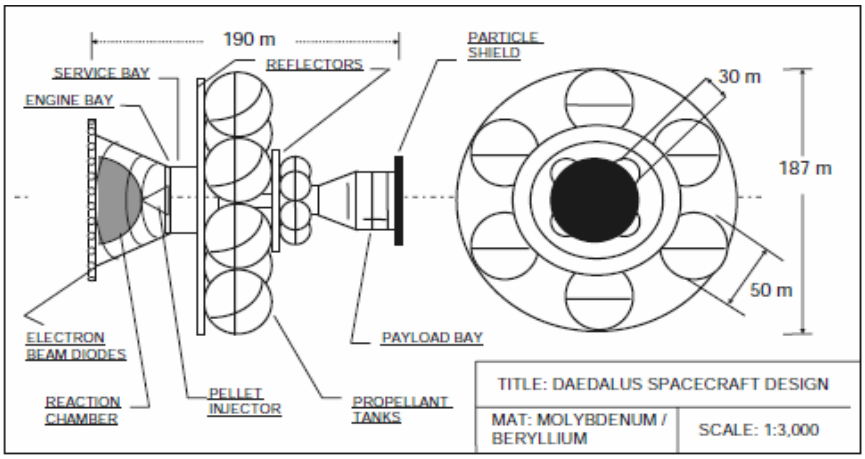

Figure 3.7 Project Daedalus spacecraft proposal. Source: [6]

Project Longshot is an example to theoretically demonstrate fusion-based propulsion [6]. It was a response to the requirement of the US National Commission from the US Naval Academy for a spacecraft program to be sent outside the solar system to the nearest star. In this case, they chose Centauri B. The structural mass of the spacecraft is approximately 400 tons and a heavy lift launch vehicle were proposed to be used to get the spacecraft to Low Earth Orbit (LEO). The main engine used a pulsed fusion micro-explosion, somewhat similar to the Daedalus. For the fusion engine, it uses DHe^3 fuel with a specific impulse of one million seconds.

Numerous devices were proposed for the vehicle including a star tracker powered by a fission reactor, visual and infrared imagers, ultraviolet telescopes, particle detectors, spectrophotometers, magnetometers and a solar wind analyser. The payload mass that included the instruments, fission reactor, lasers and shield was around 30 tons. While the structural mass and engine weighed 70 tons and 32 tons respectively. The fuel, taking up to 264 tons, heavily influences the mass of the spacecraft. Therefore, the fuel tanks were jettisoned throughout different parts of the mission.

The vehicle could achieve a speed of 12,900 km/s for cruising with a specific impulse of one million seconds. This such value corresponds to an exhaust velocity of 9,810 km/s and a mass ratio of 3.72. The different parts of the mission can be separated by the acceleration phases boosting the spacecraft from 0.004 ms^{-2} to 0.006 ms^{-2} to 0.009 ms^{-2} and finally to a maximum value of 0.02 ms^{-2} at the orbital insertion near Centauri B.

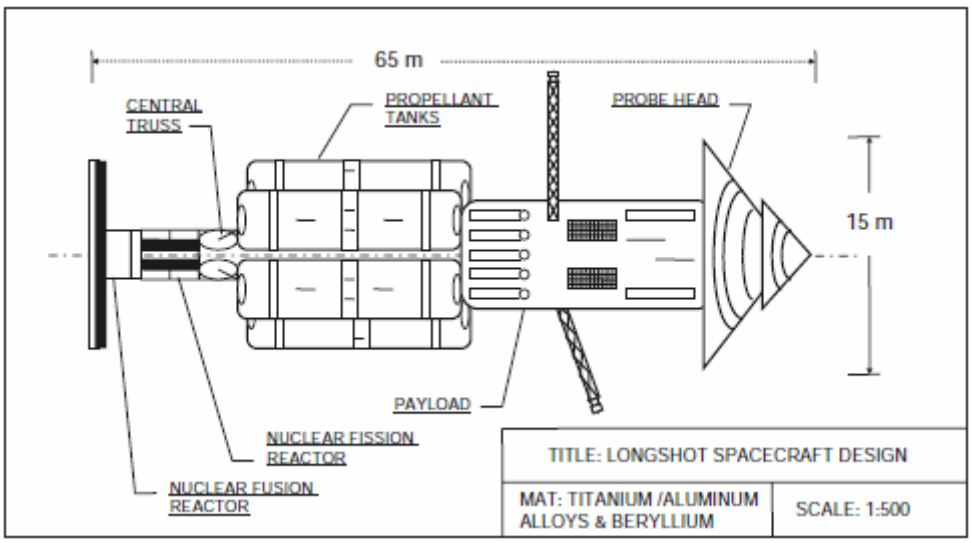

Figure 3.8 Longshot spacecraft design. Source: [6]

3.3 ELECTRICAL PROPULSION

The idea of using electrical energy as a method of propulsion was seen in the early twentieth century. American physicist, Robert Goddard (1882 – 1945), considered the electric acceleration of electrons for rocket propulsion as early as 1906. He also stated that the acceleration of ions would be more beneficial than electrons in his later notes. In general, the fuel is heated electrically and use electric or/and magnetic fields to accelerate the charged particles. These accelerated particles are then converted into thrust. The simplest form of electrical propulsion is to heat the propellant using a hot wire coil at which an electrical current passes through it. More energy can be delivered from the electric current if an arc is struck through the propellant, which generates a high temperature thus producing higher exhaust velocity.

Electric thrusters typically use much fewer propellants than that of chemical rockets because they have a high specific impulse [8]. As the electrical power is limited, the thrust generated is much weaker in comparison to a chemical rocket. However, electric propulsion can provide a thrust for a long time; hence, they are called low thrust propulsion.

Following the first launch of an electric propulsion system in 1962 and the first successful in-space operation of an electric propulsion system in 1964, major efforts have been invested to broaden the application of electrical energy in spacecraft propulsion. Common forms of space electric propulsion used today are electrothermal, electrostatic and electromagnetic. They all have differences in how they accelerate the charged particles, which can be differentiated by the type of force used to accelerate the charged particles. In this work, we will focus more on the electrothermal and electromagnetic engines.

3.3.1 ELECTROTHERMAL

Electrothermal thrusters consist of a nozzle with a high expansion ratio, linked to the chamber in which the propellant is heated by a hot wire in which current is passing through it. Electrothermal thrusters apply similar thermodynamic effects in generating a high-velocity exhaust stream of a chemical rocket. To produce high exhaust velocity for the spacecraft, the pressure and temperature of the gas entering the nozzle must be high. On the contrary, gases are bad conductors of heat which will directly affect the efficiency. Nevertheless, a low-mass radiation shield made of concentric metal foils can scale down the heat loss to the chamber walls.

For an electrothermal thruster, the temperature depends inversely on the flow rate [1]. Therefore, for a very low mass flow rate, the temperature could reach a high value. High temperatures would eventually destroy the thruster itself. There are two main design concerns: the heating coil or filament must remain intact and the chamber walls must not breakdown under high temperature and pressure. The temperature of the filament itself must not exceed the melting point of metal as it may damage the engine. Spacecraft using

such a thruster can achieve very high velocity indeed; however, the time taken to accelerate to a desired high velocity takes a longer time than a chemical thruster does.

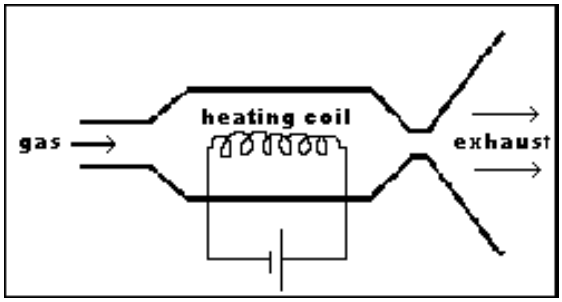

Figure 3.9 Electrothermal thruster schematic. Source: [9]

An arc-jet thruster is an alternative electrothermal propulsion system. An arc is struck between electrodes, and the working fluid is heated as it flows through it [10]. The exposure of gas to an electric field causes ionisation as the potential across it is raised. The initial resistance is very high but after ionisation, the gas begins to conduct and the current increases until all the gas is ionised. Electrons and positive ions produced from the ionisation of the working fluid will move in the opposite direction and transfer their charge to the anode and cathode electrodes respectively. Gas atoms are heated from the collision with the electrons and positive ions. The thermodynamic behaviour of this system is hard to explain, however, the recombination of ions and electrons will release the electron energy in the form of additional hot neutral molecules [1].

Since an arc can reach temperatures up to 1,500 °C, this means that the propellant used gets heated to a much higher temperature, commonly around 3000°C. As a result of attaining such a high temperature, a high specific impulse can be achieved. In contrast to that of a chemical rocket, propellants with lower molecular weight work best. An exhaust velocity can be as high as 20 km/s using a hydrogen propellant with a specific impulse of around 2000 seconds. For hydrazine propellant, only an exhaust velocity between 4500-6000 m/s can be achieved due to its heavier molecular weight.

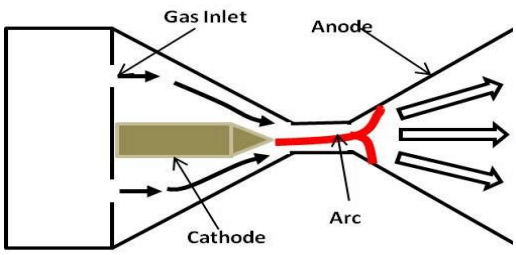

Figure 3.10 Arc-jet thruster schematic. Source: [11]

3.3.2 ELECTROMAGNETIC

As discussed previously, if a propellant has to be ionised using electrical heating – as in the arc-jet, it reduces the efficiency. If we wish to exceed the exhaust velocities achievable using electrical heating of the propellant, it is necessary to abandon thermodynamic effects and act directly upon the atoms of the propellant using electromagnetic field [1]. High bulk velocity can be generated by the acceleration of ions through electric and magnetic fields if the propellant is fully ionised. The bulk flow is created by the constraints on the ions by the field to move in the same direction. Velocities achieved can be 50,000 m/s or more, and thrusters achieve around 25,000-32,000 m/s. Another approach in using a magnetic field is by creating a steady flow of plasma.

An ion engine is a perfect example of electromagnetic propulsion. In principle, once the propellant is ionised, it then enters a strong electric field where positive ions are accelerated. After passing through a grid, they leave the engine as a high-velocity exhaust stream. The electrons do not leave hence the exhaust stream is positively charged. Subsequently, an electron current is discharged into the exhaust in order to neutralise the spacecraft. The propellant enters the ionisation chamber in the form of neutral gas molecules. Xenon is a common propellant as it is a heavy inert gas and have a specific impulse in between 3,000-6,000. As the electrons are accelerated in the radial electric field, they reach energy levels of several tens of electron volts (1 eV = 1.6 x 10^{-19} J). This amount of energy is enough to ionise neutral propellant atoms by collision. To ensure that the electrons collide with as many neutral propellant atoms as possible, an axial magnetic field is equipped, which makes them move in a spiral motion.

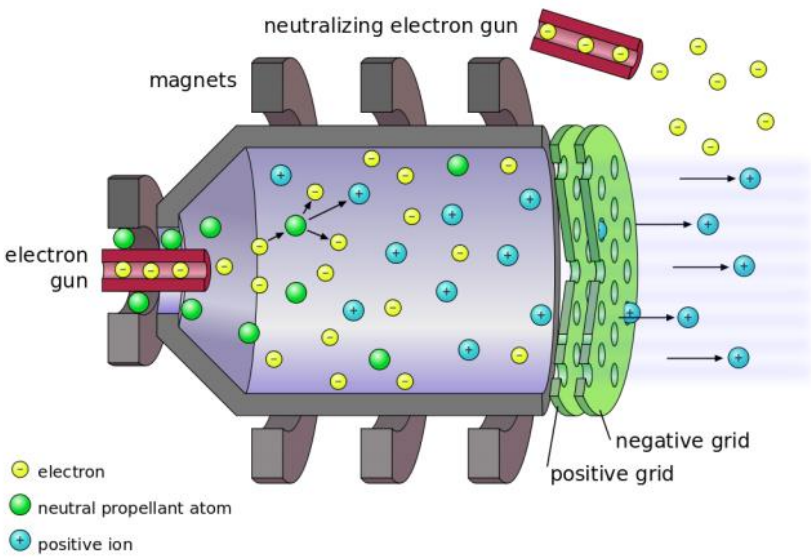

Figure 3.11 Ion thruster schematic. Source: [12]

Similar to all reaction propulsion systems, the thrust relies on the transfer of momentum from the exhaust stream to the vehicle. In theory, the exhaust velocity of the ion is directly given by the potential difference in the grid. As the ions gain a certain amount of energy, it is then converted into velocity. Another matter to consider is the mass flow rate, in this particular case, it is the current flowing through the grids. Since the ion current itself becomes the exhaust stream, an increase in current will eventually increase the amount of thrust produced. Despite that, the thrust is inversely dependant on the electrode separation, so small gaps are advantageous.

The choice of propellant must be taken into account as the exhaust velocity is related to the charge-to-mass ratio and the potential drop between the electrodes. To achieve high exhaust velocity, a high charge-to-mass ratio is needed along with a huge potential drop. Low charge-to-mass ratio ions such as caesium and mercury were used in the early design of ion engines. However, they tend to cause contamination to the vehicle and required high energy to evaporate them; as conductors, they are challenging to ionise in a liquid or solid state. Modern ion thrusters use xenon as propellant as its charge-to-mass ratio is reasonable and the exhaust is non-toxic, hence cannot contaminate the spacecraft.

$$v_e = \sqrt{\frac{2qV_1}{M}} \tag{6}$$

$\frac{q}{M}$ = Charge-to-mass ratio, V_1 = Potential drop

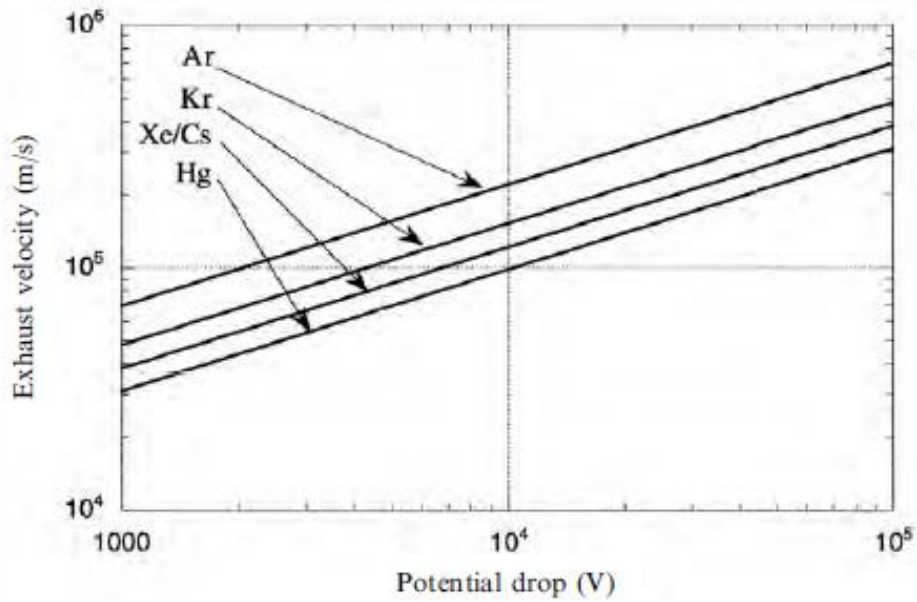

Figure 3.12 Exhaust velocity against potential drop for different ions. Source: [1]

A different example of an electromagnetic engine is the Hall Effect thrusters. It was the Russians who were the pioneers of the plasma thruster based on the Hall effect. The engine works as the electrons and ions follow spiral tracks with diameters reliant on their charge-to-mass ratio. Electrons move in small spirals while ions move in wider spirals. As the ions and electrons move in the same direction, the net current in the axial plane is zero. It is due to this motion, a plasma flow is generated.

Considering the ions and electrons colliding with a gas molecule, the spiral motion will imminently be disturbed. If the collisions are not often, the spiral motion will be uninterrupted thus causing a predominant drift along the axis of the channel. The parameter controlling the collisions of the ions and electrons with a gas molecule is the Hall parameter. It is the ratio of the spinning frequency of the particle in the magnetic field to the particle collision frequency. High values of the Hall parameter will cause an axial drift as the collisions are infrequent. If the gyro-frequency of the electrons is sufficiently large, their Hall parameter is significantly greater than the unity and they drift in a direction orthogonal to both fields as the Hall current [1]. This current will then again interact with the magnetic field to produce an axial force which will eventually accelerate the plasma.

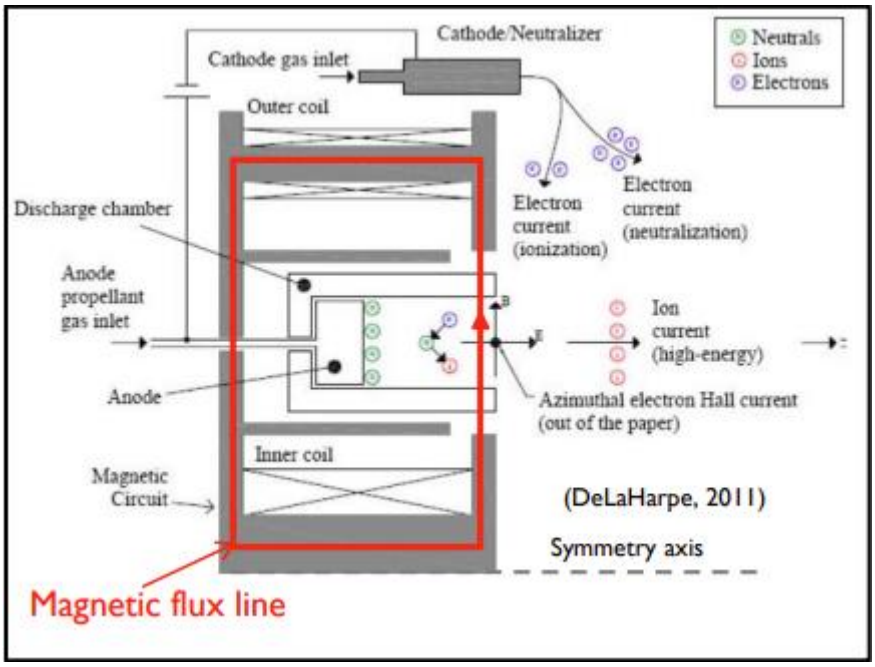

Figure 3.13 Hall Effect thruster schematic. Source: [13]

An example of a large Hall thruster is the Russian SPT 140 5 kW thruster. It generates an exhaust velocity of 22.5 km/s for a 450 V potential discharge and produces a thrust of 250 mN. The discharge current on the other hand is 10 A with an efficiency of 57%. Exhaust velocity for a typical Hall Effect thruster ranges from 15 – 25 km/s [1].

3.4 ANTIMATTER PROPULSION

British mathematician and physicist Paul Dirac (1902 – 1984) predicted the existence of antimatter in 1929, which was then discovered by Carl Anderson 3 years later. In contrast to nuclear propulsion, which converts less than 1% of the reactant mass to energy, the collision of matter and antimatter converts all its mass to energy. A matter and its antimatter have opposite electrical charges thus attracting one another. The production of antimatter from existing 'factories' is by projecting an energetic beam against a stationary metal target. This process produces a few antimatter particles through beam interaction and a small fraction is collected.

The collision of matter and antimatter particle would result in the annihilation of both into energy proportioned approximately as 1/3 gamma rays and 2/3 charged pions [6]. The pions move at around 94% of the speed of light and travel at an average of 20 m before decaying into muons. Due to its high velocity, the muons then travel for about 2 km before decaying into electrons, positrons and neutrinos. The interaction of electrons and positrons produce the annihilation of gamma rays. An advantage of antimatter is that its potential energy release is 1,000 times larger than fission and around 100 times that of fusion. 1 g of antimatter has an equivalent energy release of around 20,000 tons of chemical fuel [6].

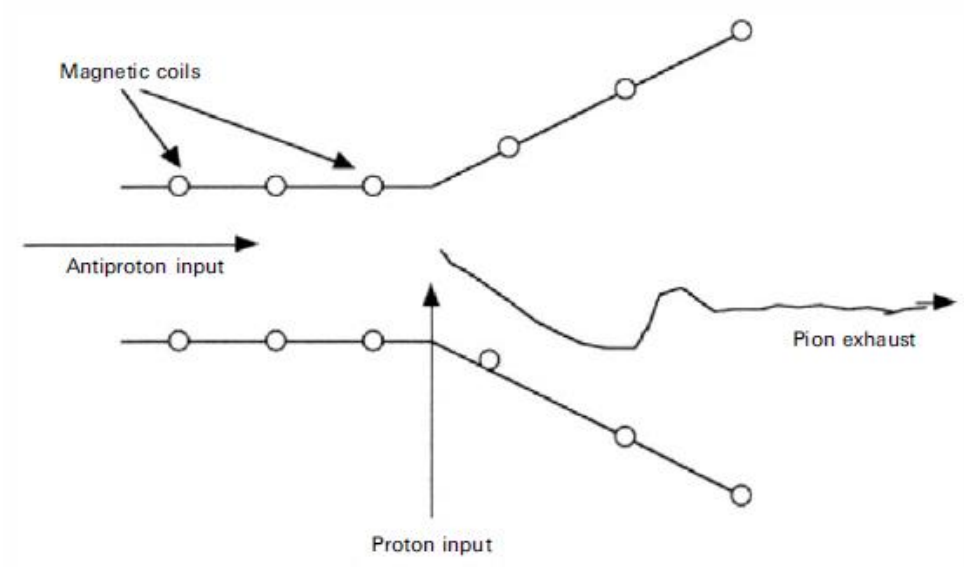

Figure 3.14 A beam core engine using matter/antimatter annihilation. Source: [15]

If the pions were focused by a magnetic nozzle, as high as 67% of the energy released in the proton-antiproton interaction will contribute to the exhaust kinetic energy. However, if muons were focused, the efficiency rate is only 40%. It is estimated that the exhaust velocity of a pion matter/antimatter rocket could be over 0.9c and the vehicle acceleration could be around 0.01g.

NASA Institute for Advanced Concept (NIAC) has funded a team of researchers to work on a new design for an antimatter powered spacecraft that reduces the side effect of radiation by generating gamma rays with much lower energy levels. It is called the Mars Reference Mission [14]. The design will use positrons instead of antiprotons as they generate 400 times less energy from gamma rays. As we are aware, nuclear engine reactor is radioactive, even after all the fuel is used up. Therefore, it wouldn't be safe for a manned space mission as their safety is paramount. However, there is no leftover radiation in a positron reactor so this reduces the safety concerns for the crew regarding radiation exposure.

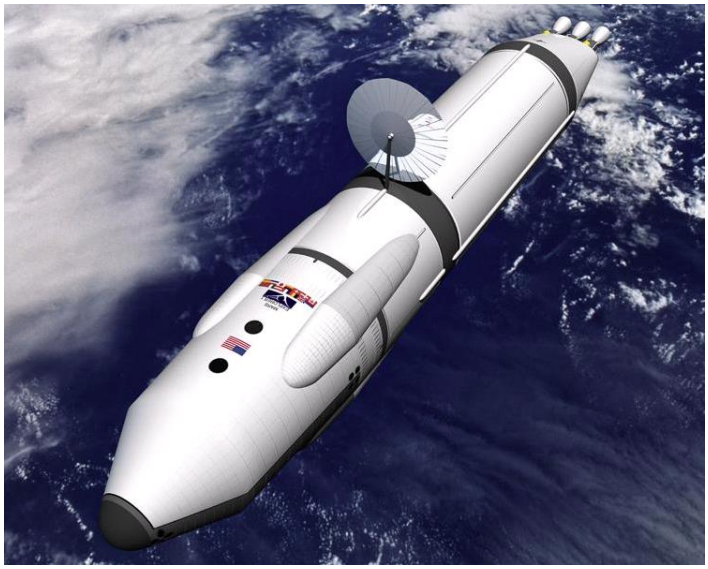

Figure 3.15 Mars Reference Mission spacecraft concept powered by positron reactor. Source: [14]

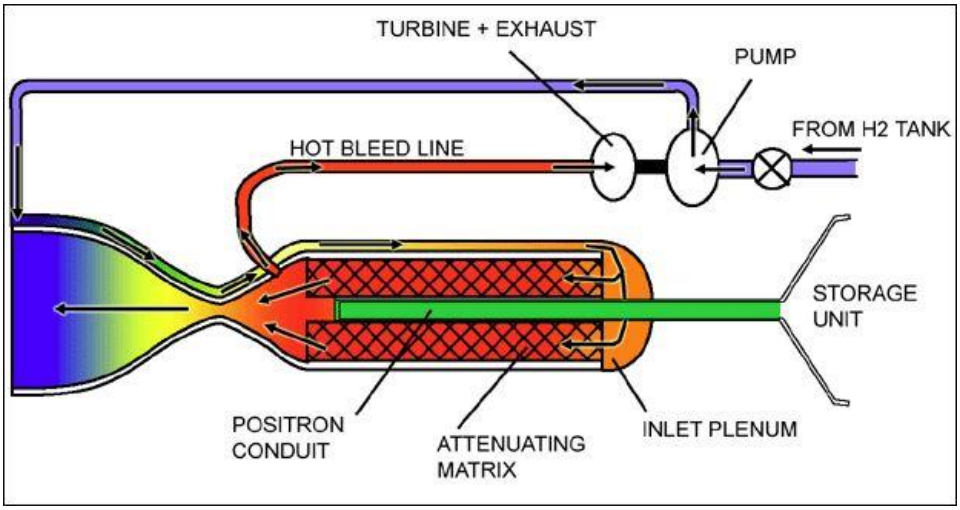

Figure 3.16 Positron reactor schematic. Source: [14]

3.5 INTERSTELLAR RAMJET

The idea behind interstellar ramjet is straightforward; instead of carrying a massive amount of propellant along the mission, it uses interstellar gas as an energy source to power a nuclear fusion-based engine at high velocity. The way an interstellar ramjet works is similar to an atmospheric ramjet, which intakes air for combustion but only at high speed but in this case, interstellar gas. Interstellar hydrogen or protons are gas particles with very high interest in this particular section. However, due to the low abundance of interstellar hydrogen with a value of 10^{-21} kg/m^3, a laser beam could be used to ionize the space and thereby creating more charged protons. These charged protons are then collected with a large magnetic field.

Using interstellar hydrogen as the fuel might be a disadvantage as it has a smaller cross-section for fusion reaction and a slow energy release rate. An alternative fusion reaction includes deuterium-deuterium or proton-deuterium because these reactions have a larger magnitude of cross-section for fusion reaction than that for proton-proton.

For a sufficient collection of fuel, the spacecraft must be already moving at a high velocity, around several percent of the speed of light. Therefore, the spacecraft itself has to be equipped with its own or separate propulsion method before reaching sufficient speed for particle collection. Due to the spacecraft moving at such high speed, it will certainly pick up a lot of drag from the space medium from which it collects the hydrogen. As the particles are collected into the scoop, they are then compressed, resulting in thermal energy loss. This would act as a drag as the overall engine efficiency decreases. Further improvements have been made to the concept in order to maximise the overall efficiency of the interstellar ramjet spacecraft.

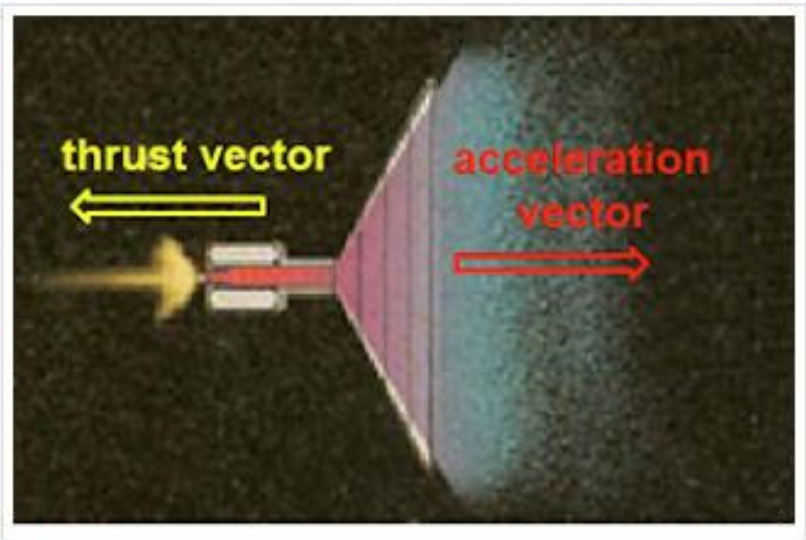

Figure 3.17 Interstellar ramjet illustration. Source: [17]

Robert Bussard (1882 – 1945), an American physicist, published the idea for interstellar ramjet in 1960, hence known as Bussard Ramjet. The idea was the spacecraft would pass through dense space regions with hydrogen abundance of close to 1 atom/cm^3. The spacecraft would include several sections: the electric or magnetic field configuration for charged particles collection and directivity, a focal point within the field configuration for the particles to converge upon, a fusion reactor section where the reactions occur and an exhaust section that fundamentally delivers thrust to the vehicle [6]. The magnetic field collecting area would be very much larger assuming for a low density of the interstellar medium. A proton-proton chain reaction was proposed for the Bussard ramjet.

In previous works, it has been assumed that the mass of the ramjet is constant, which means that all the matter collected from the interstellar medium should be ejected after being processed [16]. However, if a ramjet travels at a speed greater than its exhaust velocity, it would not be able to 'process' all its scooped mass. This would result in an increase in its own mass and subsequently slow down its motion. Therefore, it is more suitable to allow the ramjet to eject its mass in a controlled way. In his original work, Bussard suggested that only a fraction of the scooped mass is converted into energy and the rest is removed.

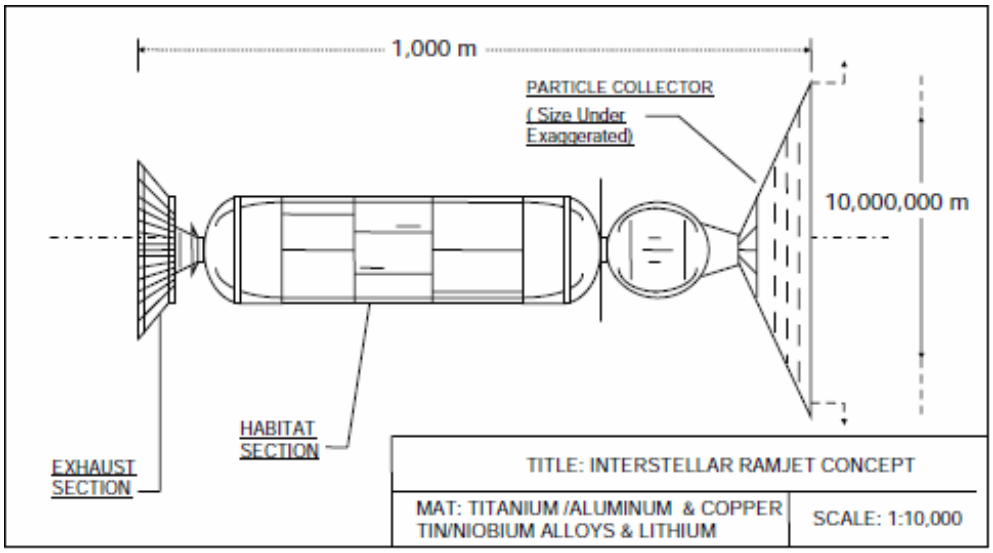

Figure 3.18 Bussard ramjet concept. Source: [6]

Although the Bussard ramjet seems to be a very large spacecraft design and thought not to be possible to build, there was still no reason to assume that such an idea is forever impossible. Thanks to all the scientist and physicist, we can use the known physical laws to magnetically trap particles. It has also been found about the existence of dense areas with hydrogen abundant of 100 – 1,000 atoms/cm^3. In dense areas as such, only an area of 1,000 km^2 is required for the interstellar gas collection, in comparison to the Bussard proposal.

3.6 SOLAR SAILING

There are only three choices when discussing about propulsion concept that relies on the Sun as the external fuel source to the spacecraft; particles, fields or photons. In this particular chapter, we will focus on the photon of light energy released by the Sun. Regardless of a photon having no mass; they can still have momentum that can be imparted to any sail. The material characteristic of the sail plays an important role as some light might be scattered off, some will be absorbed into the material and some will be transmitted through. Therefore, for an ideal sail, it should have high reflectivity and low absorption. A spacecraft using solar sail should consist of a mast, sail, hull and rigging to hold everything together. The mast is to maintain the rigidity of the sail as well as the mechanism to allow the folding/unfolding of the sail.

The sail material used for space missions is not the same as the ones used for oceans as they have a completely different engineering requirement. Four aspects must be considered in designing a sail; the first is the density, which must be light for maximum light pressure. Secondly, the sail must be thin for the same reason mentioned before. Thirdly, is the sail surface area. In order to maximise the collection of photons of light, the larger the area of sail the better. Finally, is the reflectivity of the sail. The more reflective the sail is, the more the number of photons will be reflected and greater momentum can be imparted to the vehicle instead of being absorbed by the spacecraft.

The actual amount of solar radiation flux from the Sun varies with distance according to an inverse square law [6]. The solar radiation flux intensity at Earth's orbit is around 1,400 W/m^2. To prove this, we will use the equation of solar irradiance at a distance of 1 AU (Astronomical Unit) which is equivalent to 1.496x10^{11} m.

$$S_r \left[\frac{W}{m^2}\right] = \frac{3.04\ x\ 10^{25}}{r^2} \qquad \textbf{(7)}$$

Substituting the value of distance gives us a solar irradiance of 1,345 W/m^2, although the value of 1,400 W/m^2 is often used. The value of solar pressure of a sail at a distance of 1 AU is roughly around 9.0x10^{-6} N/m^2, depending on the reflectivity of the sail μ which could be equal to one for a completely reflective surface, or somewhere around 0.8 to 0.9 for a realistic design.

$$P_{rad} \left[\frac{N}{m^2}\right] = \frac{1+\mu}{c} S_r \qquad \textbf{(8)}$$

Another key factor to be taken into consideration is the sail loading σ, which is an areal density given by the units of g/m^2. The mass consists of the entire spacecraft system that includes the sail, payload and other scientific and supporting components. The equation to sail loading is given by:

$$\sigma \left[\frac{g}{m^2}\right] = \frac{m}{A} \tag{9}$$

Combining the equations of the sail loading and the solar radiation pressure will give us the characteristic acceleration a_c of the sail. This indicates the rate at which a sail would accelerate at a distance of 1 AU, considering it is normal to the Sun's radius. The equation is given by:

$$a_c \left[\frac{m}{s^2}\right] = \frac{P_{rad}}{\sigma} \tag{10}$$

$$a_c \left[\frac{m}{s^2}\right] = 3.04x10^{25} \frac{1+\mu}{\sigma c r^2} \tag{11}$$

The concept of solar sailing is an innovative approach as it requires no propellant. Due to its propellant-less nature, a solar sail-based spacecraft can be used to perform advanced space missions that would be difficult to carry out with traditional chemical thrusters [18]. The optimization of the spacecraft design relies on the shape and area of sail as it influences the acceleration of the vehicle. The speed and acceleration of the spacecraft would then be used to reach a destination whether within our solar system or to another solar system.

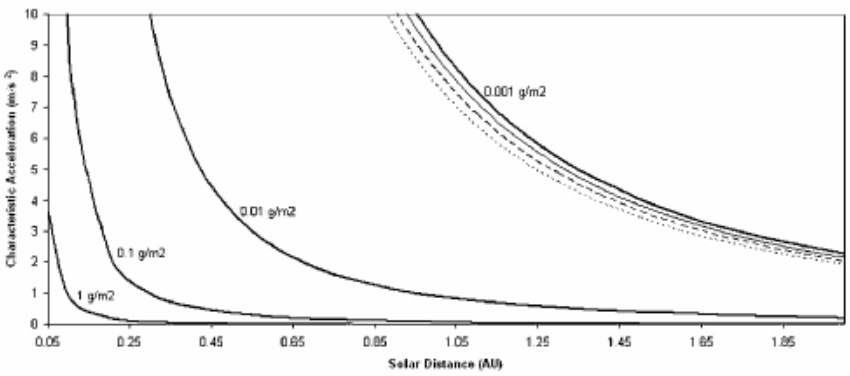

Figure 3.19 Sail performance within inner solar system for different sail loading. Source: [6]

On 21st May 2010, the Japan Exploration Agency (JAXA) launched their first solar sailing spacecraft, IKAROS which stands for Interplanetary Kite-craft Accelerated by Radiation Of the Sun. IKAROS was launched together with JAXA's Venus Climate Orbiter as a piggyback spacecraft. The primary objectives of the IKAROS mission were engineering verification of solar power sail technology in interplanetary space, such as the deployment of these polymide membranes and demonstration of acceleration by solar photon irradiation [19].

IKAROS consist of a cylindrical body ringed by the sail storage and deployment system. The wet mass of the IKAROS is 307 kg attached to a rectangular solar sail that weighs 16 kg with a minimum thickness of 7.5 µm. The deployment of the sail on IKAROS is strictly upon the spinning of the spacecraft by centrifugal force. Thus, it does not require any rigid component to give support to the extension of sail. This design makes the IKAROS very light and uses a simple sail support mechanism. The objectives of the IKAROS includes the deployment of a solar sail in space, generation of solar power through thin film solar cells attached on the sail, validating solar radiation pressure attracted on the solar sail and demonstrating guidance navigation technique for the solar sailing.

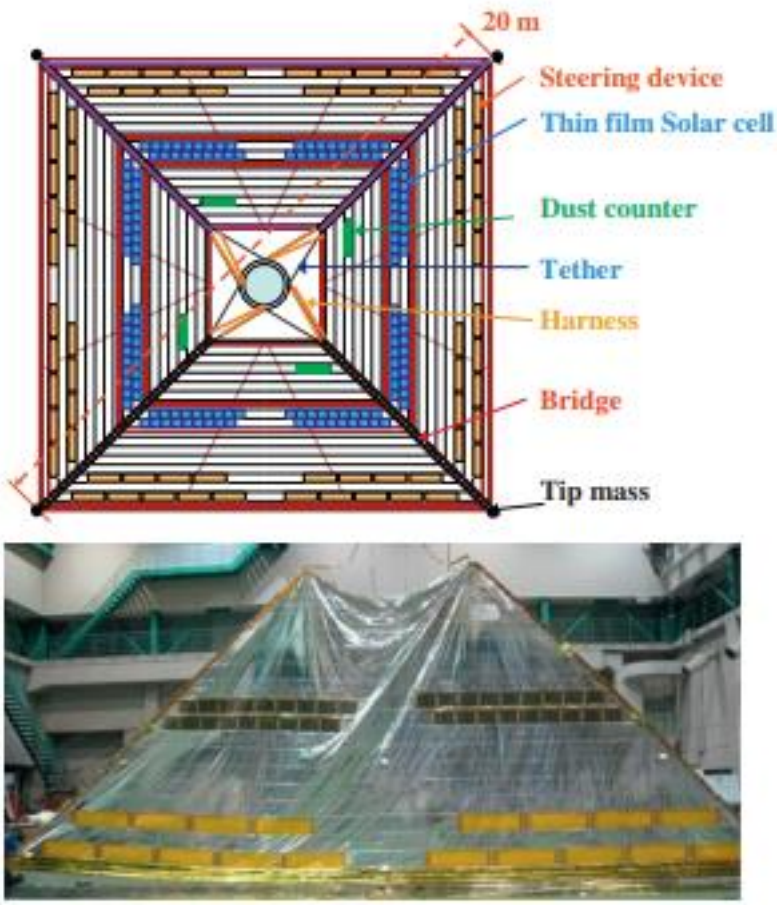

Figure 3.20 (Upper) IKAROS solar sail and devices, (lower) one of four petals of the solar sail. Source: [21]

The sail deployment mechanism of the IKAROS can be separated into two phases. The first stage of deployment is to extend the sail to a cross shape, which can be divided into 11 sub-sequences to each radially expand the sail by a certain span. Four guide rollers moving along the sail surface control the rate of extension in this phase. The next phase is to enlarge the cross shape to a flat rectangular shape by unlatching the four guide rollers mentioned earlier. Through this process, the sail is extended dynamically by centrifugal force. The spacecraft was spinning at a rate of 25 rpm before initiating the first stage, and the final spin rate was 2.5 rpm after the full extension of the sail.

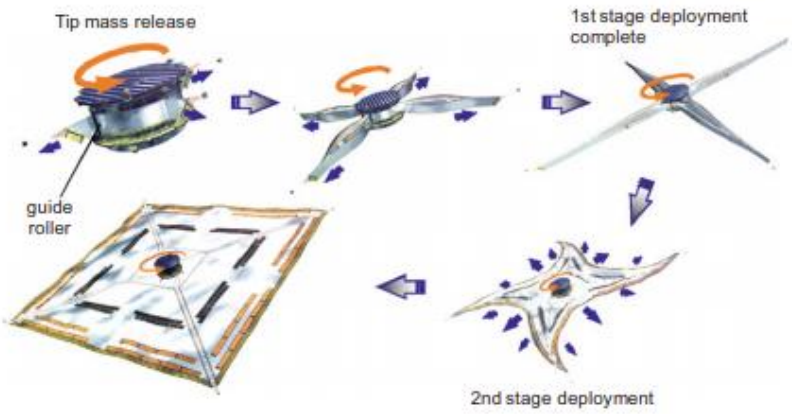

Figure 3.21 IKAROS solar sail deployment. Source: [20]

In addition to this, the IKAROS has a reflective control device (RCD), a flexible multi-layered sheet encapsulating a liquid crystal. If an electrical supply is applied to the RCD, it changes its optical reflectance. Controlling the ON/OFF of the RCD along the spinning phase will allow the spacecraft to change its spin axis without any fuel consumption.

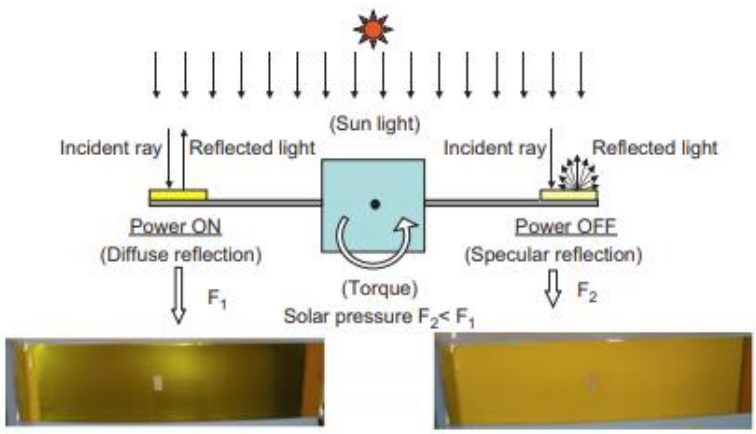

Figure 3.22 Reflective control device (RCD) concept operation. Source: [21]

As the interest for space mission beyond our solar system grew bigger, the European Space Agency responded by initiating a study for the Interstellar Heliopause Probe (IHP). The objective of the IHP is to understand the nature of the space medium and its interaction with the solar system. Solar sail propulsion was selected for this mission.

A spinning solar sail was chosen for being lighter and smaller for the same acceleration requirements of around 1.5 mm/s^2 [6]. The sail would be around 1 – 2 microns thick with a sail loading of 4 g/m^2. A thin film 250 m square sail was proposed by Genta and Brusca in 1996 [15]. Booms and struts would support the sail mechanism made of carbon-reinforced plastics. Another innovative approach was published in a paper by Santoli and Scaglione [15], recommending a bilayer sail consisting of an aluminium reflective coating binded to a plastic substrate. This plastic substrate is then evaporated upon exposure to ultraviolet radiation.

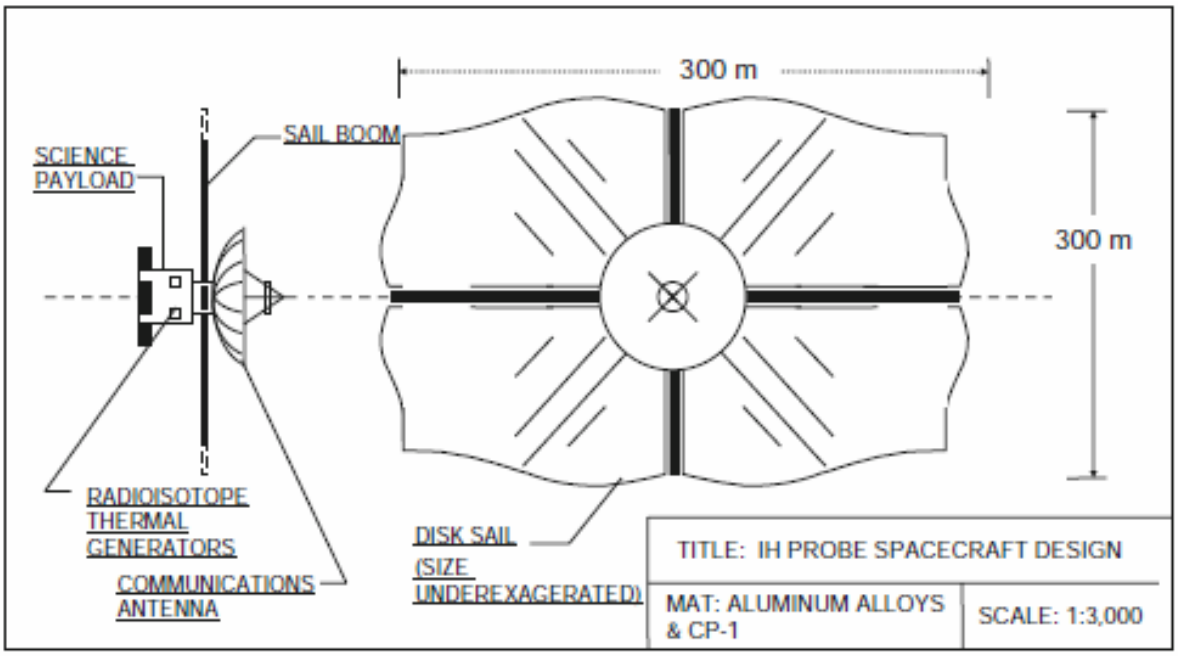

Figure 3.23 Interstellar Heliopause Probe concept. Source: [6]

Minimum carbon microtruss layer areal mass thickness	2.00×10^{-4} kg m^2
Minimum aluminium-reflective layer areal mass thickness	6.75×10^{-5} kg m^2
Aluminium layer fractional reflectivity to sunlight	0.9
Carbon microtruss layer emissivity range	0.4–0.9
Sail material operational temperature range	70–2,000 K
Sail tensile strength (measured at 300 and 525 K)	2,205 MPa

Figure 3.24 Properties of a carbon microtruss sail coated with aluminium reflective layer. Source: [15]

3.7 COMPARISON BETWEEN DIFFERENT METHODS OF PROPULSION

Methods of Propulsion		Exhaust velocity max. (theory) [km/s]	Advantages	Drawbacks
CHEMICAL PROPULSION	*LIQUID PROPELLANT ENGINE*	4.5	-high temperature for reaction	-complex delivery system that increases mass -separate tanks for propellant storage -huge amount of propellant
	SOLID PROPELLANT ENGINE	2.7	-does not require complicated delivery system -cheaper to build -no separate tanks	-cannot be controlled once ignited -low chemical energy release
NUCLEAR PROPULSION	*FISSION PROPULSION*	8.7	-high temperature -chain reaction -high specific impulse	-produces harmful radiation -low efficiency
	FUSION PROPULSION	20,000	-greater reaction than fission -high specific power	-type of propellant used (He^3)
ELECTRICAL PROPULSION	*ELECTROTHERMAL*	20	-high specific impulse -produces high temperature (greater energy of gas)	-produces high temperature (deteriorate spacecraft) -bad conductors
	ELECTROMAGNETIC	50	-high efficiency	-propellant tend to cause contamination
ANTIMATTER PROPULSION		100,000	-high efficiency -produces harmless gamma rays	-low production of antimatter/antiparticle
INTERSTELLAR RAMJET		20,000	-no propellant required to be carried -unlimited amount of propellant	-very large spacecraft -must travel at high speed beforehand
SOLAR SAILING		299,792	-no propellant required -unlimited amount of fuel resource -light materials and components	-solar radiation flux decreases with distance -requires external propulsion

Table 3.6 Different methods of propulsion comparison. Source: own

After an extensive study of different methods of propulsion, I will now compare them before continuing in the design of the spacecraft prototype. Besides, I will also compare the advantages and drawbacks of each system to ease the design process. However, for some methods, especially those with no known made spacecraft, I will only consider the theoretical values. In doing so, I will have a better understanding and a clearer vision in choosing which methods should be used in my spacecraft prototype for interstellar travel. Table 3.6 shows the comparison between the different methods of propulsion.

In this distinct section, we will review the exhaust velocity parameter for each method of propulsion before choosing a suitable one for the spacecraft prototype. However, for a concept spacecraft using any mentioned method of propulsion, we will consider its maximum theoretical exhaust velocity as no real spacecraft has been built. This is to have an easier understanding of the exhaust velocity that can be reached with their respective methods of propulsion.

High temperature requirements for a reaction will affect the spacecraft in two ways. For certain methods, the higher temperature would result in the spacecraft travelling at a higher speed as the propellant gains greater energy from the heat which is then converted into exhaust velocity. On the contrary, the high temperature will also deteriorate the combustion chamber walls. This would definitely cause a major drawback as it may destroy the whole spacecraft system. Therefore, the material to be used for the spacecraft prototype must be able to withstand a certain amount of temperature in order to prevent any failures. Other systems such as a cooling system can be installed to reduce the heat damage on the material, especially in the combustion chamber.

As mentioned before, less than one percent of its reactant mass is converted into energy for typical nuclear propulsion while all the mass is converted into energy for a matter/antimatter annihilation. Therefore, the efficiency of the method of propulsion is crucial in order to achieve a better exhaust velocity for the spacecraft hence reaching a destination target in a shorter period. Although the efficiency for some methods is not as high as expected, a typical gasoline engine has an efficiency of around 30 – 35 %, hence any value greater than 30 % is very efficient. To put in perspective, around 65 cents out of every dollar spent on gas goes to waste for a typical car engine.

Limitations on propellant will not be considered in this work, however, they will be mentioned for the sake of study and comparison. Propellants such as antiparticle and He^3 are difficult to produce and obtain in comparison to others. Nonetheless, if technologies in the future are able to produce or mine these propellants at a greater volume, it will be very reliable to use for interplanetary missions.

4. PREVIOUS FINAL YEAR PROJECT WORK

In this chapter, we will have a look on previous projects focusing on interstellar travel that has been done by other students. This is to give us more exposure on the existing design concepts and other features or components on a spacecraft that would help to achieve interstellar travel.

Muhammad Nur Ikram Bin Imran, "*Design of A Solar Sailing Prototype for Interstellar Journey*", TFG, June 2020.

The idea behind this concept is the foldable mechanical arms that expand when deployed, and at the same time unfurls the sail material. The main body of the spacecraft is a cylindrical body with its six 'arms' tucked by the side. The arms are attached in a zigzag pattern to the main body to save space. The material of sail chosen was Kapton with a thickness of 7 µm.

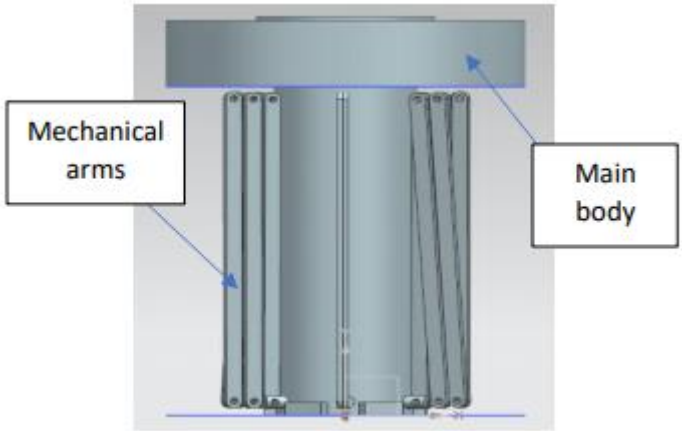

Figure 4.1 Solar sail prototype by Muhammad Nur Ikram. Source: [22]

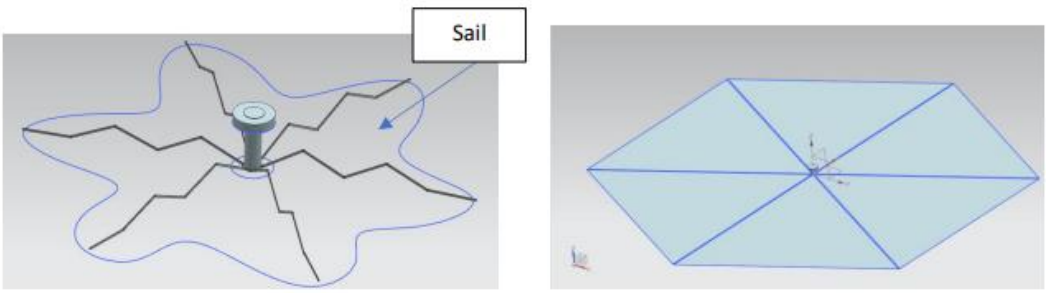

Figure 4.2 Fully deployed sail of Muhammad Nur Ikram's concept design. Souce: [22]

Josep Pinyol Escala, "*Prototip de veles solars impulsades per laser per al viatge interestel.lar*", TFG, February 2020

In this work, the author intends to design a solar sail destined for Proxima b. The idea is to use a laser emitting a monochrome light in a particular wavelength to propel the sail. The material chosen for the sail is aluminium for its high reflectivity and a layer of Kapton to provide support during the deployment of sail. Besides that, carbon fibre was chosen for the material of the other structures. Another focus of this work is on the geometry of the sail. The author has chosen a square shaped sail instead of a circular one as it needs less structure length to support the same area. Consequently, this will give a lesser overall mass to increase the efficiency of the spacecraft.

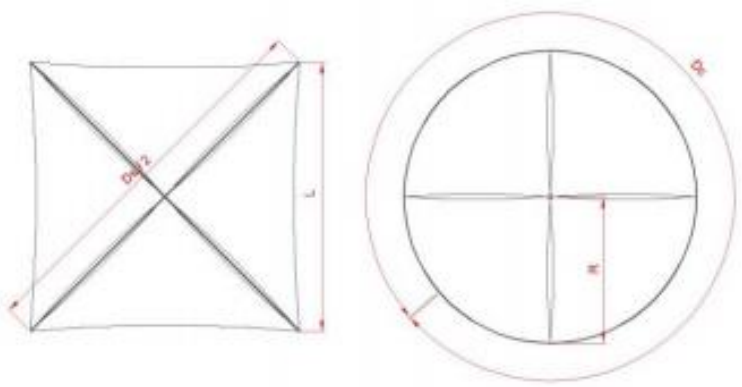

Figure 4.3 Comparison between circular and square shaped sail. Source: [23]

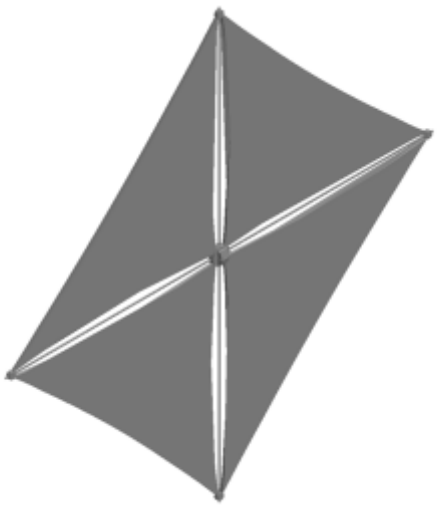

Figure 4.4 Illustration of fully deployed solar sail by Josep Pinyol Escala. Source: [23]

5. THE SOLAR SYSTEM AND BEYOND

There are many planetary systems similar to ours in the universe, with planets orbiting a star. The star in our planetary system is the Sun; hence, the name solar system as the Sun is named Sol in Latin word. Our solar system consists of our star, the Sun, and everything bound to it by gravity – the planets Mercury, Venus, Earth, Mars, Jupiter, Saturn, Uranus and Neptune, dwarf planets such as Pluto, dozens of moons and millions of asteroids, comets and meteoroids [22]. Our solar system orbits the centre of the Milky Way Galaxy and situated in one of the galaxy's four spiral arms, the Orion Arm.

Interstellar objects such as meteorites or space rocks that have fallen to Earth have encouraged scientists to determine the age of the solar system. These objects hold fascinating information regarding the chemistry and history of their body. The Allende meteorite, the oldest meteorite, dates back to 4.55 billion years old. In addition to that, the sequence of the planets is due to the way our solar system is formed, rocky materials could withstand the heat from the young Sun, therefore the first 4 planets are small with rocky surfaces while the other four are giant planets.

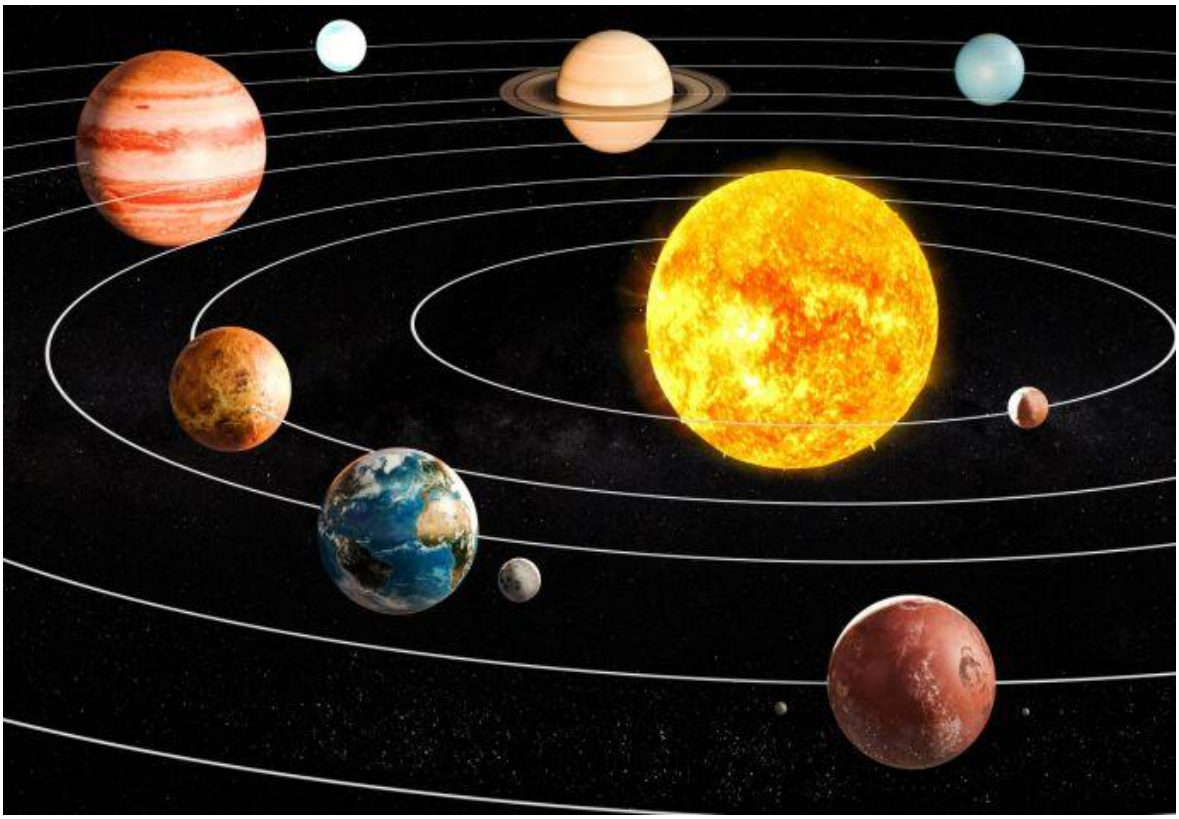

Figure 5.1 The solar system. Source: [24]

5.1 INTRODUCTION

In this section, we will introduce the planets in our solar system with a brief description of their respective characteristics. By doing so, we can have a better perspective when comparing planets in our solar system to neighbouring stars and exoplanets, which will be discussed later in this chapter.

The closest planet to the Sun is Mercury, it is also the smallest planet in the solar system. It is a fraction larger than the Earth's Moon. Venus comes next, and it is the hottest planet in our solar system. The atmosphere on Venus is a thick layer mostly consisting of carbon dioxide that traps heat. Identical to Mercury, no moons are orbiting Venus. The third planet from the Sun is the Earth. The closest planet to Earth is Venus with a separation of 42 million km when they are closest to each other. Earth is the only known planet to have any form of life in the universe. The planet's surface is 71 % covered by water and its atmosphere protects the planet from solar radiation. Earth has one moon and scientists think Earth's moon was formed from a piece of Earth that broke off when a giant object smashed into young Earth [23]. The fourth planet is Mars, known as Red Planet because of the iron dust that covers the surface giving Mars a rusty colour. Average temperatures on Mars is around -60 ^{o}C, making it doubtful for any signs of life.

The outer planets in the solar system are in the order of Jupiter, Saturn, Uranus and Neptune. Jupiter is the biggest planet and a gas giant, mainly made up of helium and hydrogen. The size of Jupiter is twice that of all other planets in the solar system combined and dozens of moons surround it. The sixth planet, Saturn, is the second largest planet after Jupiter. It is also a gas giant composed of helium and hydrogen. Uranus is an ice giant as it composes of heavier gas elements that include water, methane and ammonia ice. Uranus also has 27 moons. The last planet is Neptune, also an ice giant. Approximately 80 % of the planet's mass is made up of water, methane and ammonia. It would take 4 hours for sunlight to reach Neptune, while it would only take 8 minutes to reach Earth.

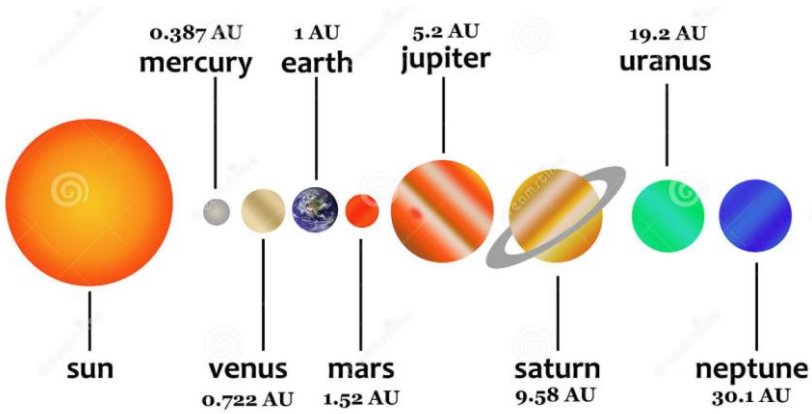

Figure 5.2 Distance of planets from the Sun in Astronomical Units. Source: [25]

5.2 EARTH

To achieve interstellar flight, let us first understand what it takes just to get into space. The first step is to reach the Earth's orbit and escape its gravitational influence. By equating the centripetal force and the gravitational force, we can assume the velocity that must be reached by a spacecraft to escape the Earth's gravitational field:

$$\frac{mv^2}{r} = \frac{G\mathrm{M}_{\oplus}m}{r^2} \tag{12}$$

where $\mathrm{M}_{\oplus}$ is central mass, *m* is orbiting mass (spacecraft), orbital radius *r*, velocity of rotation *v* and the gravitational constant *G*.

To reach a circular orbital velocity, it can be calculated by:

$$v_{circ} = \sqrt{\frac{G\mathrm{M}_{\oplus}}{r_o}} \tag{13}$$

Substituting the equations with the mass of the Earth, 5.975×10^{24} kg and the gravitational constant, 6.67×10^{-11} N/kg^{2}m^2 together with the mean radius of the Earth, 6,371 km. This gives a velocity value of 7.9 km/s to reach a circular orbit. This is not exactly the velocity needed to get into space, but it is the velocity necessary to stay there [1]. From the equation above, we can see that when the radius is the largest, furthest point away from Earth, the velocity drops being the lowest. This can be explained by the conservation of energy, as some kinetic energy given to the spacecraft is converted to potential energy as it moves further away from the Earth's gravitational field.

In an elliptical orbit, a spacecraft could travel outwards in greater distances before returning to its injection point. Elliptical orbits are important because they are used to transfer a spacecraft from one circular orbit to another [1]. Different orbit shapes have different eccentricity values; a circular orbit is zero, an elliptical orbit is 0.65, a parabolic orbit is 1, hyperbola orbit for values greater than one. To understand this we can express the eccentricity using the following equation:

$$e = \frac{r_o V_0^2}{GM} - 1 \tag{14}$$

As the velocity of spacecraft increases over time, the eccentricity of the elliptical orbit becomes greater. If the eccentricity equals one, the ellipse becomes a parabola. Substituting the value for e = 1 gives:

$$\frac{r_o V_0^2}{GM} = 2 \tag{15}$$

$$v_{esc} = \sqrt{\frac{2GM_{\oplus}}{r_o}} \tag{16}$$

This is the escape velocity or the minimum amount of velocity needed to be given to a spacecraft to leave the Earth's gravitation field. Note that the escape velocity is greater by a factor of $\sqrt{2}$ than the circular orbital velocity, v_{circ}. A spacecraft needs to accelerate to a velocity of 11.2 km/s to entirely escape the Earth's orbit.

Object	Mass (Earth = 1)	Mass (kg)	Equatorial radius (km)	v_{circ} (km/s)	v_{esc} (km/s)
Sun	3.3×10^5	1.989×10^{30}	6.959×10^5	437	618
Mercury	0.055	3.302×10^{23}	2,439	3	4.3
Venus	0.815	4.869×10^{24}	6,052	7.3	10.4
Earth	1.0	5.974×10^{24}	6,378	7.9	11.2
Moon	0.012	7.348×10^{22}	1,738	1.7	2.4
Mars	0.107	6.419×10^{23}	3,397	3.6	5
Jupiter	317.83	1.899×10^{27}	71,492	42.1	59.5
Saturn	95.16	5.685×10^{26}	60,268	25.1	35.5
Uranus	14.5	8.662×10^{25}	25,559	15.0	21.3
Neptune	17.204	1.028×10^{26}	24,764	16.6	23.5
Pluto	0.002	1.3×10^{22}	1,150	0.87	1.3

Table 5.1 Circular orbital velocity and escape velocity for different solar system bodies. Source: [6]

It is helpful to note that the circular orbital velocity and escape velocity of planet Mars is much lesser than that of Earth. Therefore, launching a spacecraft from the Red Planet will be beneficial for future missions to outer planets. Another matter to consider is that the spacecraft must be given a large horizontal velocity, parallel to Earth's surface to enter or leave Earth orbit. The horizontal acceleration is also used to travel from one circular orbit to another, via elliptical transfer orbit as mentioned before.

5.3 WHAT HAPPENED TO PLUTO?

Pluto was once known as the ninth planet in our solar system until recently it was de-categorized as a dwarf planet. It is a small planet with a diameter of only 2,320 km. The mass of Pluto is around 0.2 % the mass of Earth. The atmosphere on Pluto is mainly made up of methane and nitrogen with a surface temperature of -223 ^{o}C. It is believed that a methane, nitrogen, and carbon monoxide atmosphere covers that surface of Pluto, giving rise to the high surface reflectivity and consequently allowing it to be seen within the inner solar system. Pluto is now known to have 5 moons: Charon, Nix, Styx, Kerberos, and Hydra.

The International Astronomical Union defines a planet as a celestial body that orbits the sun, has enough gravity to pull itself into a round or almost round shape, and has cleared the neighborhood around its orbit [23]. Unfortunately, Pluto fell short on the third definition of a planet, it has failed to clear its neighborhood of space objects. To have a better view on this, Pluto did not clear its orbit because a part of its orbit was captured by planet Neptune. Therefore, Pluto is no longer recognized as a planet in the solar system but its new classification is a dwarf planet.

Figure 5.3 A picture of dwarf planet Pluto. Source: [26]

5.4 WHAT LIES BEYOND?

5.4.1 KUIPER BELT

In Figure 4.2, we can see that the distance between planet Neptune and the Sun is approximately 30 AU. The Kuiper Belt, a region of frozen bodies, is situated between 30 to 50 AU from the Sun. It consists of mostly water, methane and ammonia ices with sizes around 100 – 1,000 km. It was proposed as the origin of many objects from the outer reaches of the solar system and the source of short-period comets. It is within this region that resides many dwarf planets such as Pluto.

Another example of a dwarf planet besides Pluto is Ceres. It is located around 413 million km from the sun with a diameter of around 965 km. In addition, Eris is another object discovered in the Kuiper Belt in 2005. It is located 10 billion km from the Sun and is thought to be made up of primarily rock and water ice together with methane ice that makes it visible through a powerful telescope. Eris is the largest object to be found within the Kuiper belt with a slightly larger diameter, of around 2,413 km than Pluto is.

Sedna is another object that resides in the Kuiper Belt with a size of three quarters to that of Pluto. It has a diameter of around 1,500 km and is positioned about 130 billion km from the Sun. This makes Sedna the most distant object yet discovered within the gravitational field of the Sun. Quaoar is an object approximately 2,500 km in diameter and located at 42 AU. Lastly, XR190 is an object with a diameter of less than 1,000 km and situated at 58 AU.

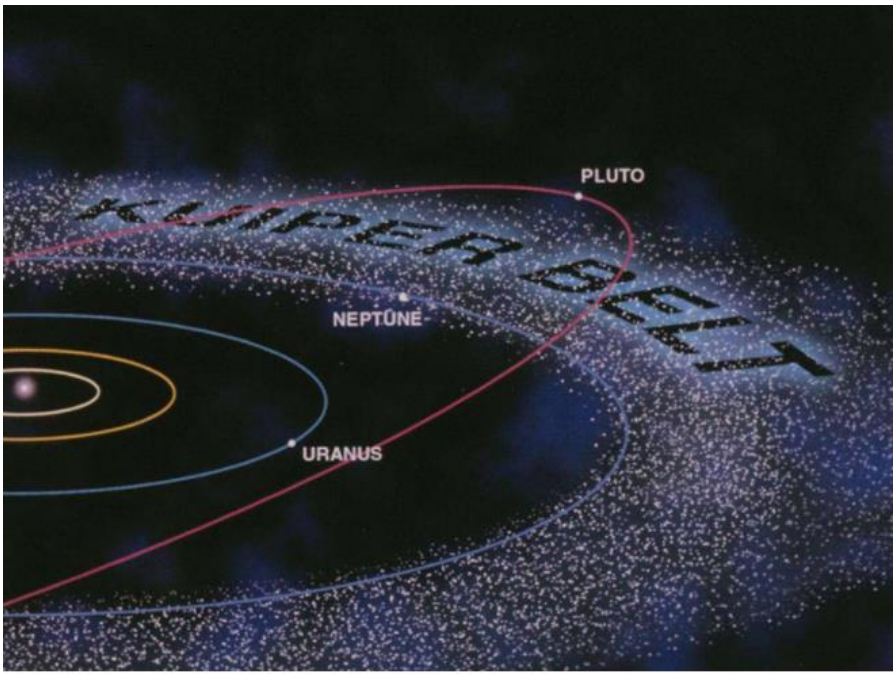

Figure 5.4 Kuiper Belt illustration. Source: [27]

5.4.2 OORT CLOUD

It was a Dutch astronomer named Jan Hendrick Oort who theorised the existence of the Oort Cloud. The idea behind it was an immense spherical cloud surrounding the solar system located beyond the Kuiper Belt. The inner limits of the cloud begin at 2,000 AU and extend up to 50,000 AU from the sun, making it the true boundary of the solar system. The gravitational effect of the sun becomes very weak that objects can easily escape out into deep space [6].

The Oort Cloud is thought to be made up of many icy objects and the realm of true comets. The icy objects are scattered at tens of millions of km from one another. Objects that reside within the Oort Cloud are mostly frozen icebergs and is said to have dimensions between 10 – 20 km. An approaching star would affect the objects of the Oort Cloud due to its gravitational influence. This would consequently allow the objects to the sent towards the inner part of our solar system. This scenario is called long-period comets.

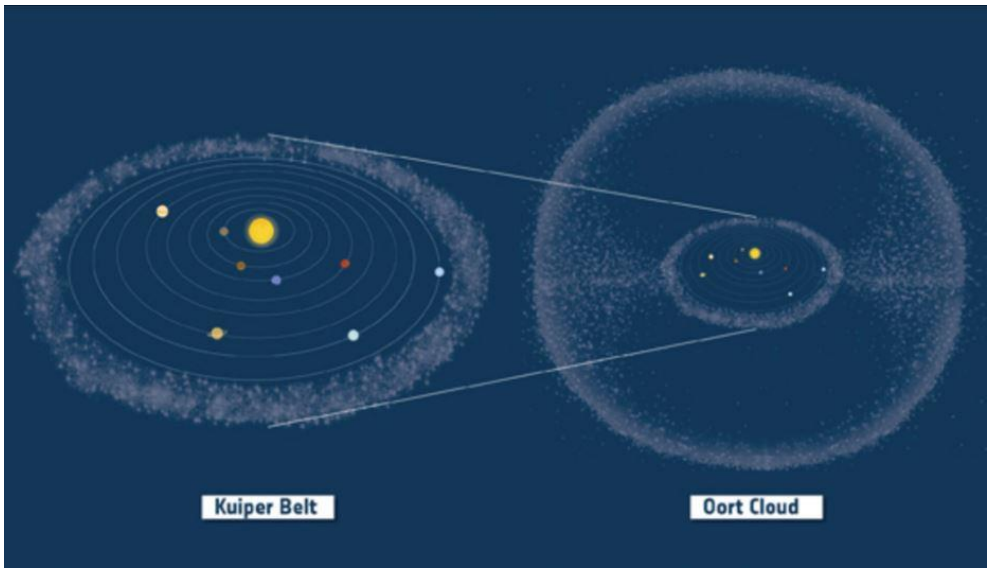

Figure 5.5 Oort Cloud illustration. Source: [28]

No missions have been sent to explore the Oort Cloud yet, but five spacecraft will eventually get there: Voyager 1 and 2, New Horizons, and Pioneer 10 and 11. The location of Voyager 1 is 152 AU from the Sun [30] after 52 years of travel, it was first launched in 1969. Since the Oort Cloud is so distant, the power sources for all the spacecraft will be dead centuries before they reach its inner edge [29].

Although the Oort Cloud remains very little known, many scientists still agree that it is the possible origin of comets. Beyond the bounds of the Oort Cloud lies the diffuse interstellar medium. This interstellar medium is a collection of hydrogen and helium in general, spread throughout space.

5.5 POSSIBLE DESTINATIONS

Before designing a spacecraft capable of interstellar journey, a destination must be chosen in advance. This is to ensure that the potential engine performance of the spacecraft concept can be fully optimized to reach its destination. Since we are aiming for an interstellar journey, which lies beyond the Oort Cloud, we will focus on neighbouring stars and exoplanets which are potentially reachable. Exoplanets are planets that orbit around other stars. One method astronomers use to search for exoplanets is by looking for wobbly stars. A star that has planets doesn't orbit perfectly around its centre [30].

5.5.1 NEIGHBOURING STARS

The nearest and brightest star in the southern Centaurus constellation is Alpha Centauri that is located 4.3 light years away. A light year is another astronomical distance unit in which it is equivalent to the distance of light that travels in one year. To have a better insight, one light year is roughly around 9.461 x 10^{12} km. Alpha Centauri is actually a triple star system, with its companion Alpha Centauri B located around 11 AU distance at the closest approach and 36 AU distance at the farthest [6]. In comparison to the Sun, Alpha Centauri A is heavier with 10 % more mass and size approximately 20 % bigger than the Sun. On the other hand, Alpha Centauri B has 90 % of the mass of the Sun and a 13 % smaller radius.

The binary system also has a stellar companion in orbit around it called Proxima Centauri [6]. It is located about 13,000 AU from Alpha Centauri A and B. Proxima Centauri belongs to a class of mass stars with cooler surface temperatures, known as red dwarfs and has a mass of 12 % of that to the Sun [31].

Figure 5.6 Proxima Centauri that is gravitationally bounded to Alpha Centauri, is marked in the red circle in this figure and the bright stars are Alpha Centauri A and B. Source: [31]

Barnard's Star is another possible destination, located 5.9 light years away. It is the second nearest star to our Sun if we consider the triple star system Alpha Centauri (Alpha Centauri A and B and Proxima Centauri) as one star. Barnard's Star is classified as a red dwarf and located in the constellation of Ophiuchus. It has 12 % the solar mass with a 20 % less radius. To compare it with our Sun, it would take around seven Barnard's Star to match the mass of the Sun, and 133 to match our Sun's volume [32]. Since the Barnard's Star is relatively close, it has become one of the best source for studying a red dwarf, the most abundant stars in the universe.

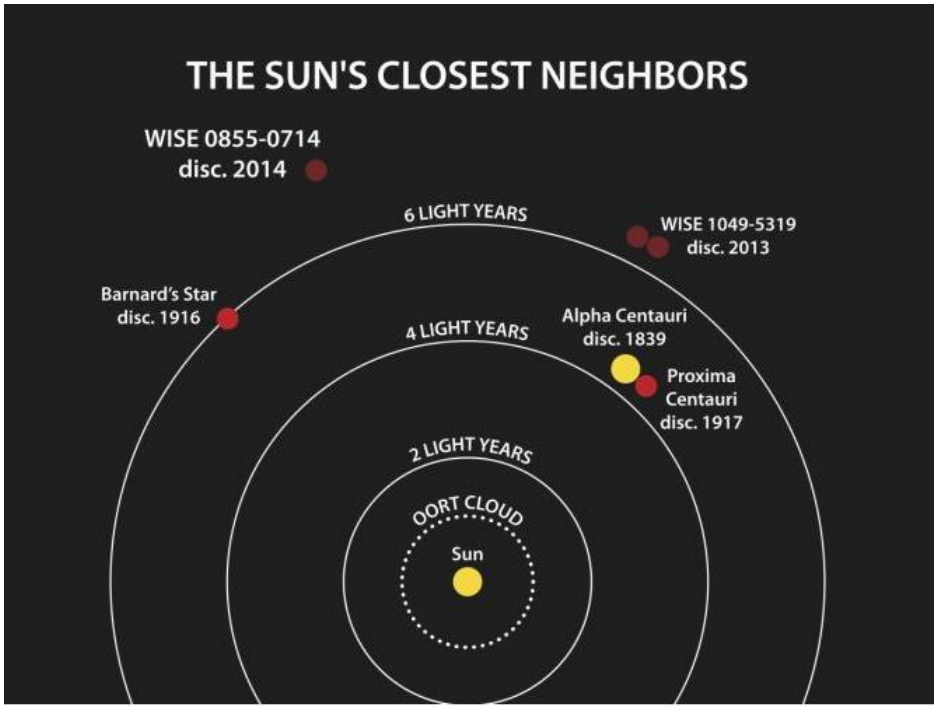

Figure 5.7 Neighbouring stars to our Sun. Source: [32]

Star	Distance (light years)	Relative mass (radius)
Sun	0	1.0 (1.0)
Proxima Centauri	4.3	0.1 (0.14)
Alpha Centauri A and B	4.4	1.10 and 0.89 (1.23 and 0.87)
Barnard's Star	5.9	0.15 (0.12)

Table 5.2 Stellar data for nearby stars. Source: [6]

5.5.2 EXOPLANETS

Exoplanets come in a wide variety of sizes, from gas giants to rocky planets. Size and mass play an important role in determining the planet types. As for now, exoplanets are categorized into four types; Gas giant, Neptune-like (Neptunian), super-Earth and terrestrial. They can be hot enough to boil metal or locked up in deep freeze [33]. Although no spacecraft has reached other exoplanets, they are still possible destinations to reach so that we can look in on them and study their composition, temperature and atmosphere and perhaps leave footprints on them one day, just like how we did to the moon.

Gas giant is a large planet mainly composed of helium and/or hydrogen and can be larger than Jupiter and much closer in size to their stars. There are 1,373 confirmed discoveries of gas giant planets. Gas giants nearer to their stars are often called 'hot Jupiters' [34]. This is because they orbit so close to their stars that their temperatures reach thousands of degrees. An example of a gas giant is 51 Pegasi b, with a mass of 0.46 Jupiters. It takes 4.2 days for the gas giant exoplanet to complete one orbit of its star, and it is located 0.0527 AU from its star [35].

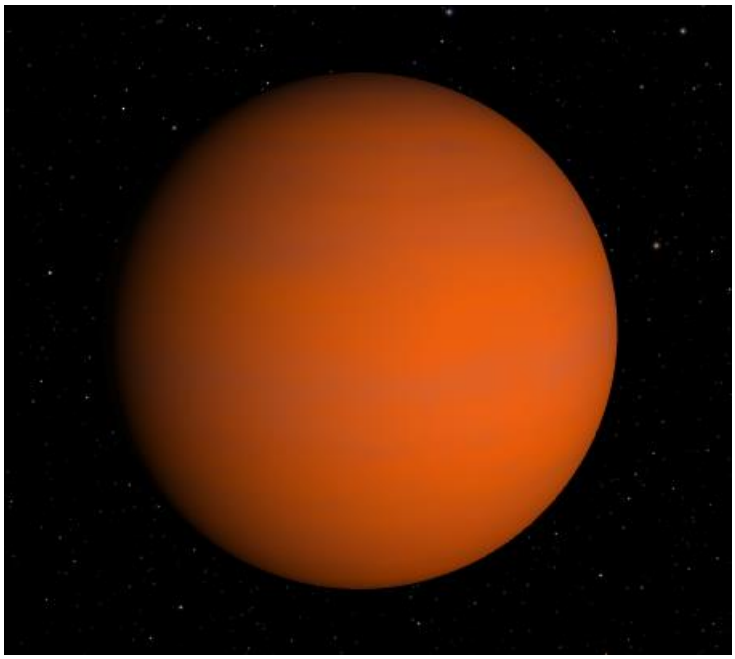

Figure 5.8 Hypothetical illustration of 51 Pegasi b from NASA. Source: [35]

Neptunian exoplanets are similar in size to Neptune or Uranus in our solar system [36]. They may have a mixture of rocky interiors with heavier metals at their cores, and typically have hydrogen and helium dominated atmospheres. NASA has 1,483 confirmed discoveries of Neptunian exoplanets. Kepler-1665 b is an example of a Neptunian exoplanet, 696 light years from Earth. Its mass is 5 Earths, it takes 11.9 days to complete one orbit of its star, and it 0.103 AU from its star [37].

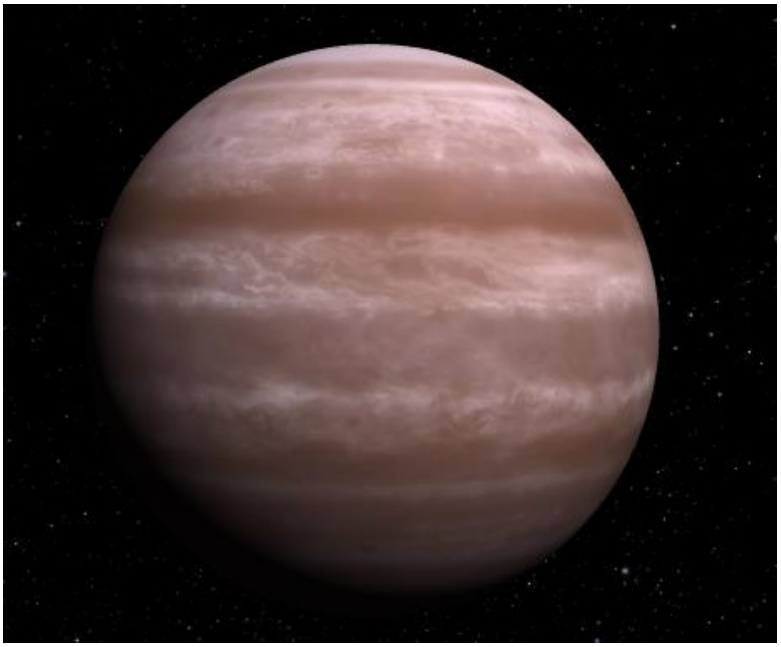

Figure 5.9 Illustration of Kepler-1655 b from NASA. Source: [37]

Super-Earth is a reference to a class of exoplanets that are larger than Earth but lighter than Neptune and Uranus. They can be made of gas, rock or a combination of both [38]. Although it is named super-Earth, it doesn't not necessarily mean that the exoplanets are similar to our Earth. Super-Earths can be up to 10 times the size of Earth and exoplanets at the upper limit of the super-Earth size limit is known as mini-Neptunes.

NASA discovered a super-Earth and two mini-Neptunes orbiting the star, TOI 270, in 2019. The star is located about 73 light years away in the southern constellation of Pictor [38]. The inner-most planet orbiting the star, T0I 270 b, is a super-Earth with a size of 1.25 Earth and believed to have a mass around 1.9 times greater than the Earth. The following two planets, TOI 270 c and d, are mini-Neptunes and weighs around 7 and 5 times more than Earth's mass respectively. In terms of its size, they are 2.4 and 2.1 times larger than Earth [38]. Similar to Neptune, these mini-Neptunes are dominated by gasses rather than rock.

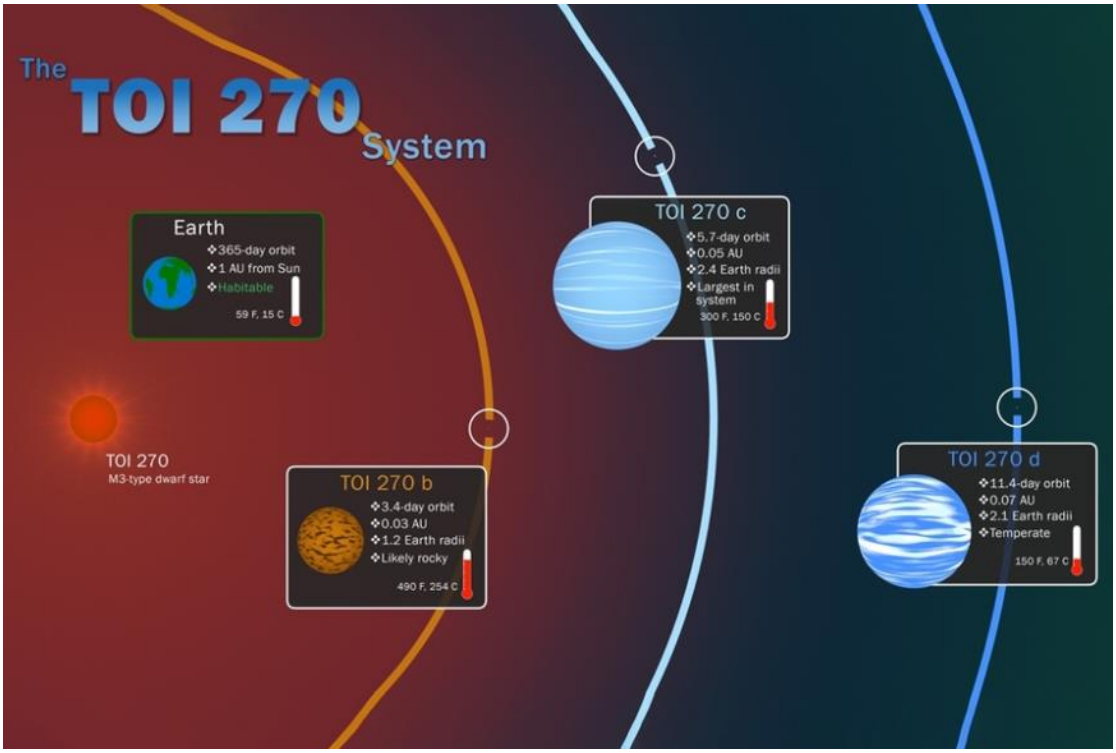

Figure 5.10 Infographic illustration of the TOI 270 star system. Source: [38]

Terrestrial planets are planets with a size similar or smaller to Earth. They are planets composed of rock, silicate, water and/or carbon. Terrestrial planets have a bulk composition that is dominated by rock or iron, and a solid or liquid surface [39]. According to NASA, there are 165 confirmed discoveries on terrestrial planets outside our solar system.

TRAPPIST-1 e is the fourth out of seven rocky worlds orbiting a single star, TRAPPIST-1. It is a perfect example of a habitable exoplanet as it is believed to have liquid water on its surface. In terms of size, density and the amount of radiation it receives from its star, this is the most similar planet to Earth [39].

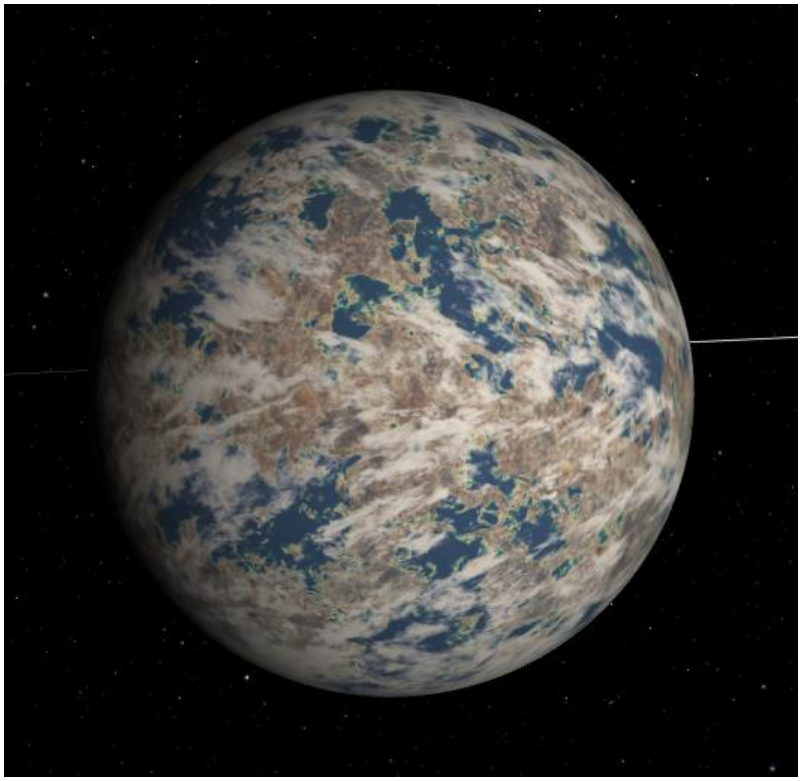

Figure 5.11 Hypothetical illustration of TRAPPIST-1 e. Source: [40]

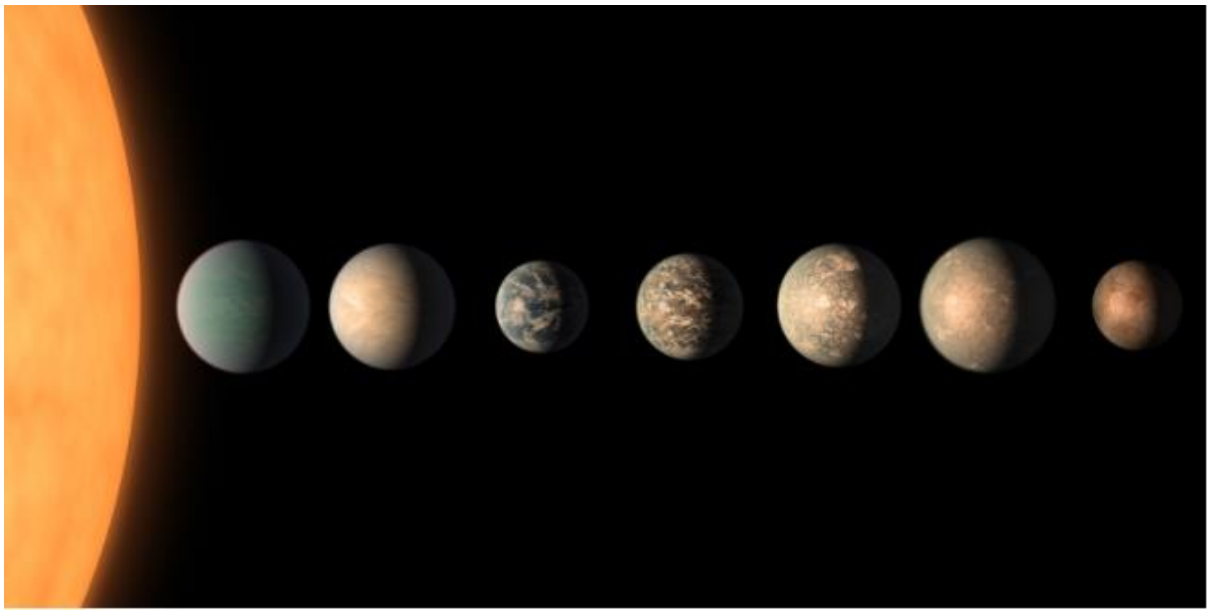

Figure 5.12 TRAPPIST-1 and its seven rocky planets concept. Source: [39]

Exoplanet destination	Characteristics
GAS GIANT 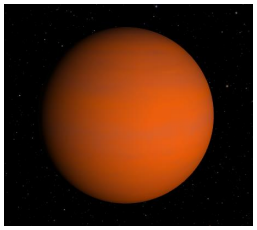 *51 Pegasi b*	-46% mass of Jupiter -50 light years from Earth
NEPTUNIAN 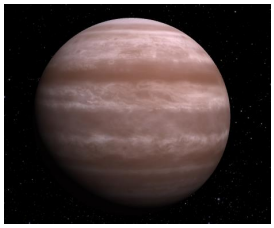 *Kepler-1655 b*	-has a mass 5 times of Earth -696 light years from Earth
SUPER-EARTH 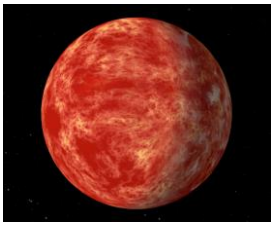 *55 Cancri e*	-hottest side of planet is nearly 2,700 K and the coolest is 1,400 K. -41 light years from Earth
TERRESTRIAL 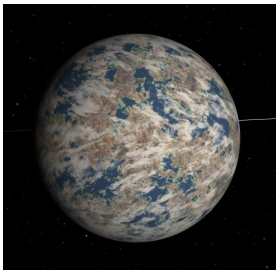 *TRAPPIST 1-e*	-believed to have liquid water on its surface -41 light years from Earth

Table 5.3 Comparison of Exoplanet destination. Source: own.

After a brief study on the different stars and exoplanets, the most reasonable destination in my opinion is the exoplanet *TRAPPIST 1-e*. This is due to its composition somewhat similar to Earth and believed to have liquid water. In addition, the amount of radiation it receives from its star is the most similar to Earth. Besides that, the distance is the least among the other exoplanets.

6. DESIGN AND 3D MODEL

This chapter will discuss my humble approach in designing a spacecraft prototype and some of its features that I think would make it possible for interstellar travel. I have chosen to design a multistage rocket instead of a single stage. As we have mentioned before, a rocket's mass is heavily influenced by the mass of the propellant used rather than its structural mass (dry mass). Therefore, it would be inefficient to carry the mass of the empty tanks, engine etc., once all the propellant is exhausted. Using a multistage rocket, the empty tanks can be removed from the spacecraft to reduce unnecessary weight. As a result, the acceleration of the spacecraft will be greater as the overall mass decreases.

The mass ratio of a single rocket can be expressed as:

$$R = \frac{Ms+Mf+Mp}{Ms+Mp} \quad \textbf{(17)}$$

Note that *Ms* is the structural mass, *Mf* is the fuel mass and *Mp* is the mass of payload.

For a multistage rocket, the mass ratio is given by:

$$R_1 = \frac{Ms_1+Mf_1+Mp}{Ms_1+Mf_2+Mp} \quad \textbf{(18)}$$

$$R_2 = \frac{Ms_2+Mf_2+Mp}{Ms_2+Mp} \quad \textbf{(19)}$$

The number subscripts in equation **(18)** and **(19)** refers to the stages, for example Ms_2 is the structural mass for stage 2.

Ultimately, the final velocity of the rocket will be the sum of the velocity increments generated from two or more stages with respect to their exhaust velocity, v_e. This can be shown by:

$$V = v_e log_e R_1 + v_e log_e R_2 \quad \textbf{(20)}$$

While the velocity for a single stage rocket can be referred to equation **(2)**.

In the design section, I will be using Siemens NX12 software to create a 3D model of the spacecraft concept. The focus will be more on the material and other features/characteristics of the rocket. I will not go into details such as designing the engine and other pipe delivery system as I lack the knowledge in that particular field. However, I will design the body frame for each stage, the exhaust nozzles and the payload which will be sent into space for the interstellar journey. Besides that, I will choose a suitable propulsion method for each stage of the rocket. In addition, I will briefly explain the functions of some features or components of the rocket. By doing so, we can have an overall view of how the spacecraft concept design will set flight and reach its destination, *TRAPPIST 1-e*. The drawings and plans of the major components of the spacecraft prototype can be referred in the Annex.

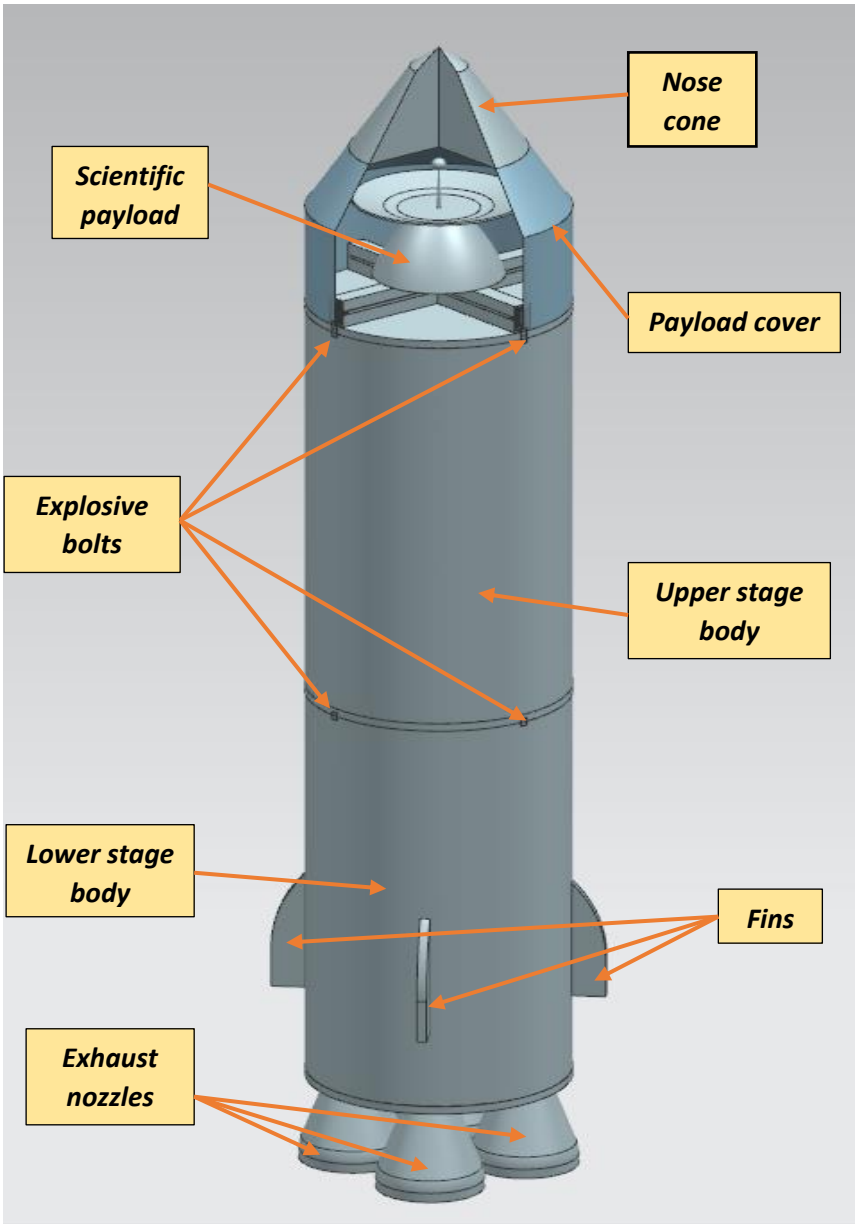

Figure 6.1 Overall 3D model of the spacecraft concept. Source: own

6.1 LOWER STAGE

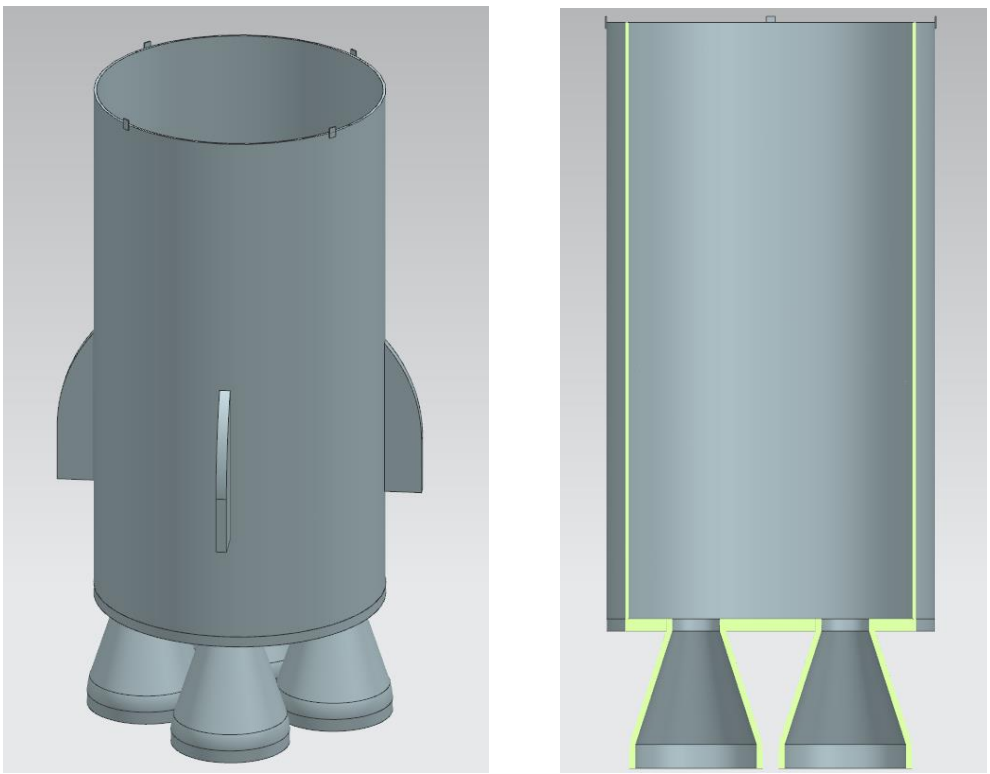

Figure 6.2 Lower stage body frame and the exhaust nozzles of the spacecraft concept.
Souce: own

The design of the body frame is a cylindrical hollow body with holes at the base to fit in the exhaust nozzles. Explosive bolts are mounted to the upper part of the first stage body frame. The role of the explosive bolts is to detach the body frame from the rest of the spacecraft once all the propellant is burnt in the lower stage of flight. As for the exhaust nozzle, it must be designed to be short to minimize the expansion, especially in the lower stages of flight where the atmospheric pressure is the greatest and would affect the performance of the rocket [1]. Meanwhile, the function of the fins attached to the body is to reduce any atmospheric drag on the spacecraft during flight.

The body frame must be made from a very strong but lightweight material. This is to ensure that the spacecraft can be as light as possible at the same time able to support all the weight of the engine, delivery system, etc. In addition to that, the body frame must be able to withstand high temperatures since most propulsion methods generate a tremendous amount of heat. Therefore, the selection of material must be accurate to prevent any failures during flight.

Before deciding the material of the body frame, let us first have a look at the two main material used on a rocket body frame, titanium and aluminium. We will compare the physical properties of each material and choose the best one for this particular spacecraft concept.

Properties	Aluminium	Titanium
Density (g/cm^3)	2.70	4.506
Melting point (K)	933.47 (660.32 °C)	1941 (1668 °C)
Boiling point (K)	2743 (2470 °C)	3560 (3287 °C)
Young's modulus (GPa)	70	116

Table 6.1 Physical property comparison between Aluminium and Titanium. Souce: Wikipedia.

As you can see in table 6.1, the density of aluminium is about half that of titanium. This will ultimately give a smaller mass to a body frame for a fixed amount of volume. However, the other physical properties of titanium totally dominate that of aluminium. Titanium can withstand a temperature up to more than twice the melting point of aluminium, and it has a greater young's modulus. This makes titanium a stronger material despite its heavier density. Therefore, the material chosen for the body frame is aluminium.

The method of propulsion chosen for this stage is by chemical propulsion – liquid propellant engine. The propellant choice for this stage is liquid oxygen and hydrogen. Based on table 3.1, the liquid oxygen and hydrogen engine could generate an exhaust velocity of 4,550 m/s. Although the exhaust velocity is not as high as other propulsion methods, note that the focus of the lower stage is to generate a high thrust rather than a high exhaust velocity. The reason behind this is so that the thrust generated would be greater than the total mass of the multi-stage spacecraft to achieve lift-off.

Referring to equation **(1)**, the rocket's thrust is given by the mass flow rate, $\dot{m}$ and the exhaust velocity, v_e. Therefore, the bigger the mass flow rate of propellant, the bigger the thrust generated by the engine. As mentioned before, the thrust must be greater than the total weight of the rocket.

6.2 UPPER STAGE

Similar to the lower stage, the body frame of the upper stage is made up of titanium and has holes at the bottom to fit in the exhaust nozzles. The explosive bolts mounted to the upper part of this body frame is to detach themselves from the payload, which will be sent into space. However, the exhaust nozzles for this stage is designed to be long with a suitable expansion ratio. This is because, there is no drag for a vacuum, and the best way to optimise the rocket engine is to expand the nozzle as much as possible [1].

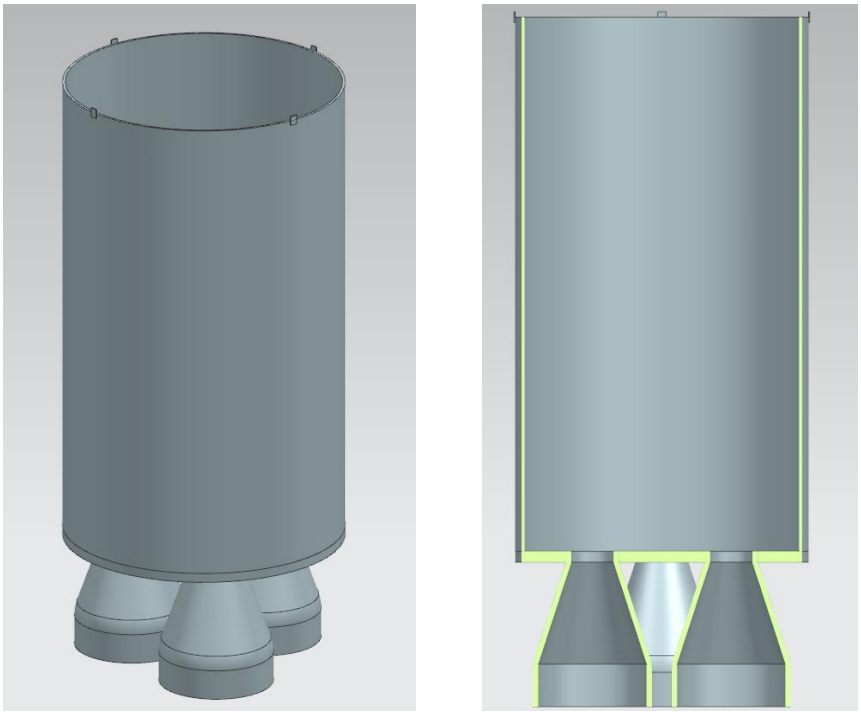

Figure 6.3 Upper stage body frame and the exhaust nozzles of the spacecraft concept.
Source: own

In this stage, I have chosen nuclear fission as the method of propulsion. Referring to table 3.6, the maximum exhaust velocity in theory for nuclear fission propulsion is 8.7 km/s. Combining the two stages with a suitable mass ratio for each stage, the rocket should be able to gain enough velocity to escape the Earth's orbit, as discussed in chapter 5.2.

By using equation **(20)**, velocity of the rocket should be as follows:

$$V = 4{,}550 log_e R_1 + 8{,}700 log_e R_2 \text{ [m/s]}$$

Where R_1 is the mass ratio of the lower stage and R_2 is the mass ratio of the upper stage.

6.3 LAST STAGE

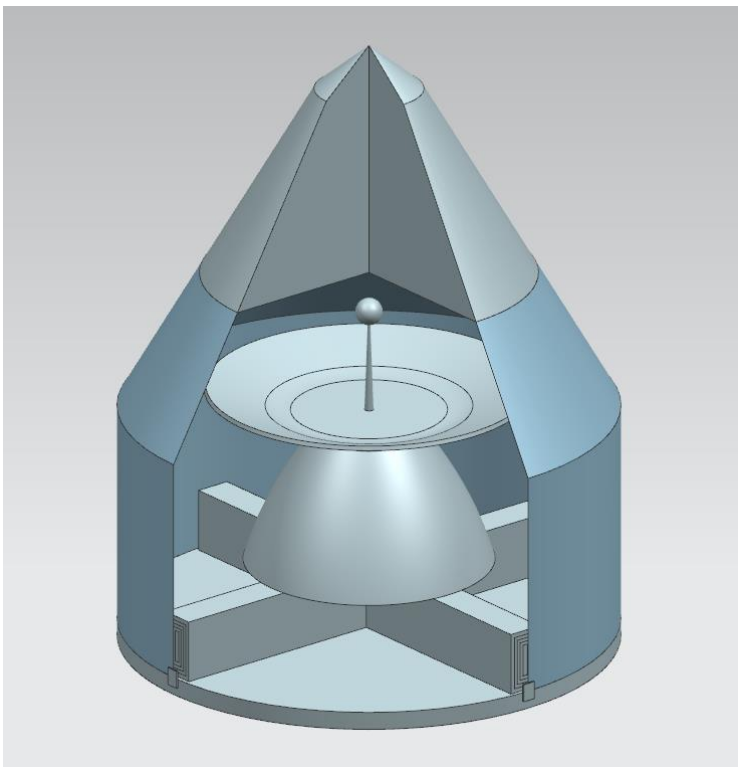

Figure 6.4 The scientific payload inside its cover and the nose cone of the rocket. Source: own

As you can see in the figure above, the scientific payload is in its cover before being deployed for the rest of the flight journey to *TRAPPIST 1-e*. The reason behind this is to protect the payload from getting damaged in the previous stages of flight. There are explosive bolts mounted to the payload cover to be removed safely without damaging the payload before deploying. Meanwhile, the function of the nose cone on the tip of the rocket is to reduce any form of atmospheric drag acting on the rocket. It will be removed by the end of the lower stage as the atmospheric drag becomes minimal in the later stages. We can reduce any unnecessary weight to be carried for the rest of the flight by removing the nose cone. In doing so, we can increase the efficiency of the spacecraft during flight.

The method of propulsion that I have chosen for the last stage is by a solar sail. The main reason behind this is because the payload will rely on an external fuel, the radiation from the Sun, instead of carrying its fuel. In figure 6.5, there are four *extendable arms* attached to the motor of the payload located on the bottom part. The idea is that the motor would help push the arms outward until fully extended. There is also an antenna disc to help with the navigation system of the scientific payload throughout the whole journey until it reaches *TRAPPIST 1-e*.

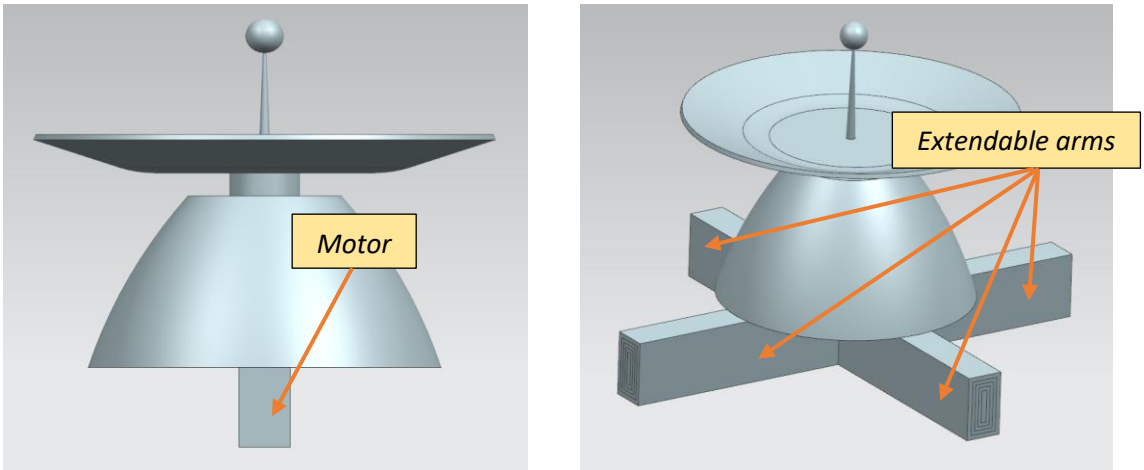

Figure 6.5 3D model of the scientific payload. Source: own

The inspiration behind this design idea is from Muhammad Nur Ikram and Josep Pinyol Escala's previous study on this topic [22][23]. I took inspiration from Muhammad Nur Ikram's spacecraft model [22] in which the mechanical arms on his spacecraft can be folded to save space. I took a similar approach in my design with more features that could help provide more stability and rigidity to the sail.

We will focus more on the design and the deployment mechanism of the *extendable arms* in this part. There are five arms in total with different dimensions for each *extendable arm*, but only the four inner arms could extend a certain span (*intermediate arms* and the *final arm*). The length of each arm is the same, making it able to be stored inside each other.

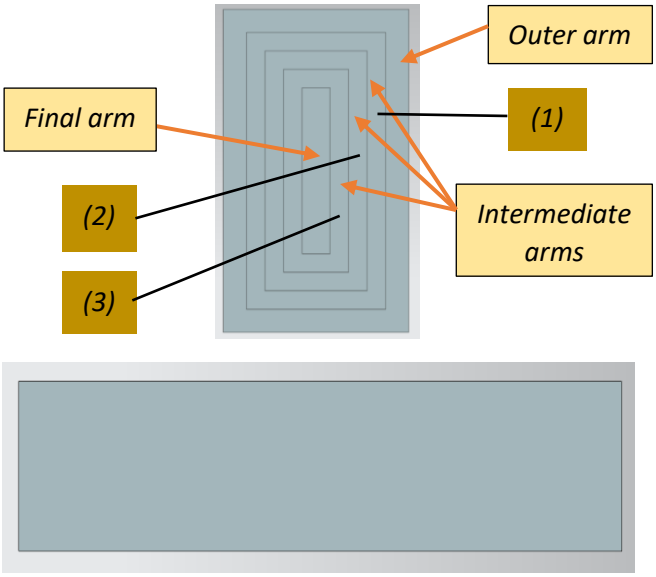

Figure 6.6 Front and side view of an *extendable arm*. Source: own

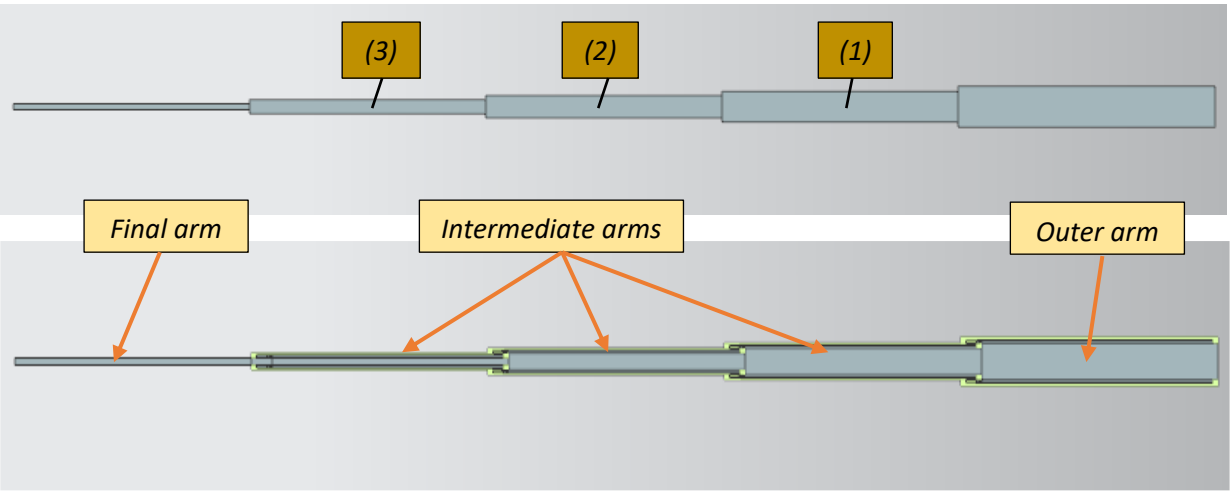

Figure 6.7 Top cross-sectional view of a fully deployed *extendable arm*. Source: own

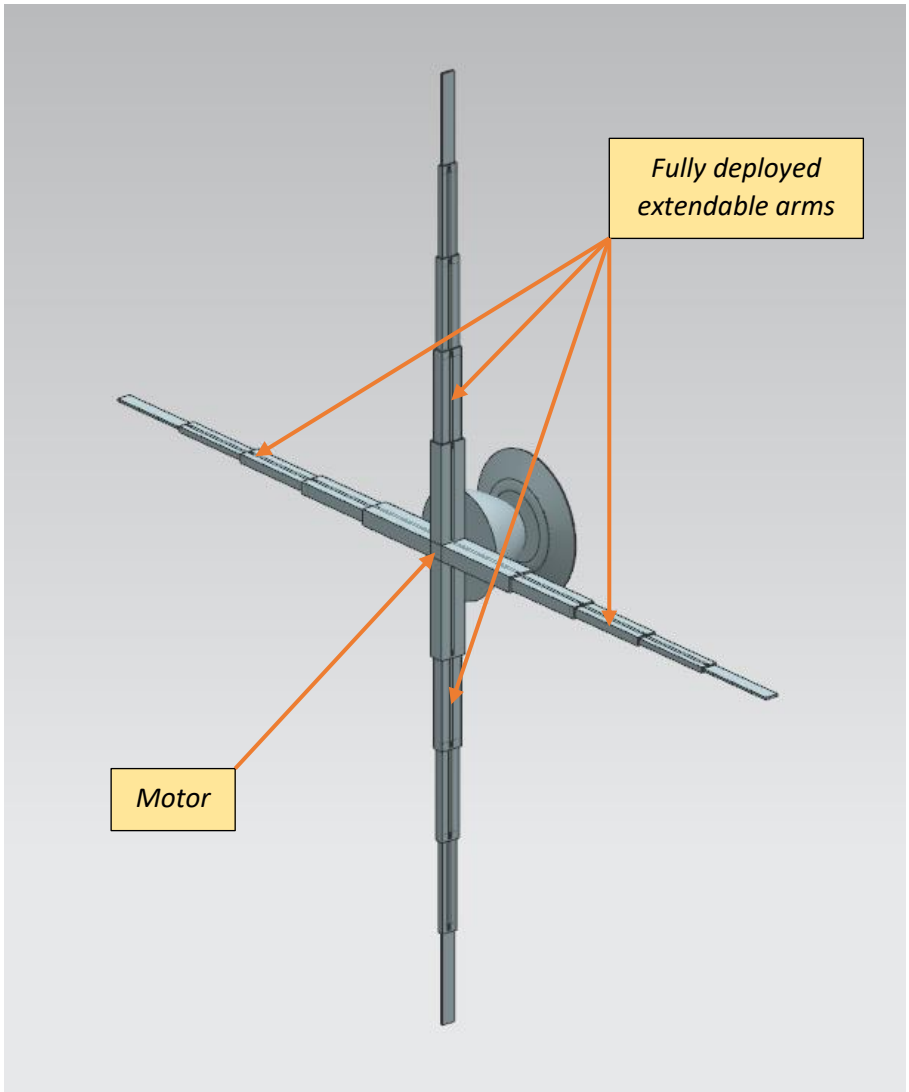

Figure 6.8 All four *extendable arms* fully deployed. Source: own

Figure 6.8 shows the fully deployed *extendable arms* on the scientific payload. To have an initial understanding of the mechanism of the arm, the three *intermediate arms* are designed the same way with different hollow rectangular dimensions. In contrast, the *outer arm* and *final arm* are designed slightly different from one another.

The deployment mechanism of the *extendable arms* depends on three key features: the *pathways*, the *sliders* and the *valves*. These three features will be explained later in this section. However, note that not all key feature is on every arm, for example, the *sliders* are absent on the *outer arm* design, and the *pathways* are absent on the *final arm* design.

The *outer arm*, is stationary and designed to have *pathways* on the interior walls. This is to allow the *intermediate arm (1)* to move along the *pathways*. Besides that, *valves* are located at the end of each *pathways* to ensure that the arms will move only in one direction.

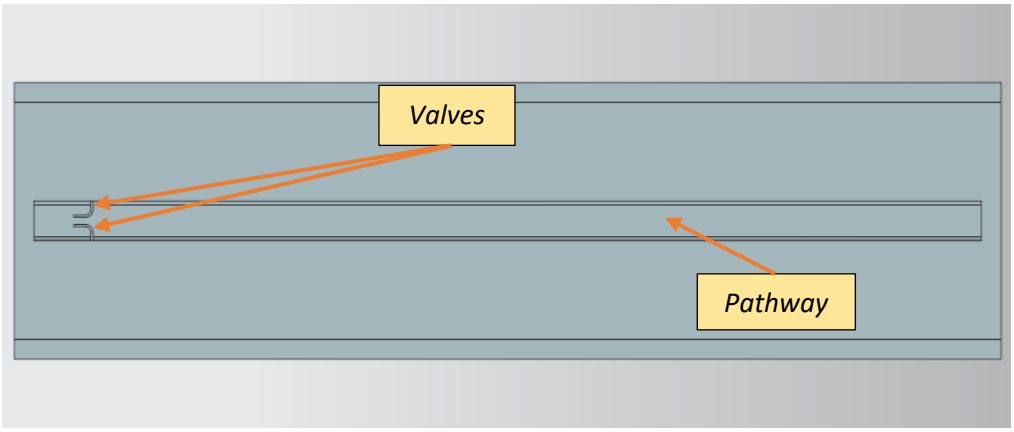

Figure 6.9 Interior wall of the *outer arm*. Source: own

The three *intermediate arms* are designed the same way and made to slide along the *pathways*, as shown in figure 6.9. In order to allow the *intermediate arms (1, 2 and 3)* to move along the *pathway*, they are designed to have *sliders* on the exterior walls together with the *pathways* and *valves* on their interior walls, similar to the *outer arm*.

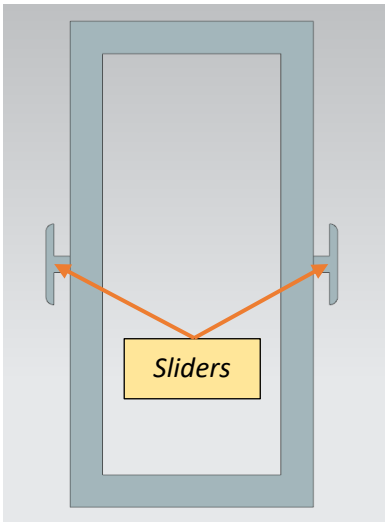

Figure 6.10 *Sliders* attached to the exterior walls of the *intermediate arm (1)*. Source: own

The *sliders* attached to the exterior walls allow it (*intermediate arm (1)*) to slide through the *pathways* until the end, passing through the *valves*. The *valves* then lock the *sliders* in place, preventing them from moving backwards. This is to ensure that the arms are always deployed to their full span.

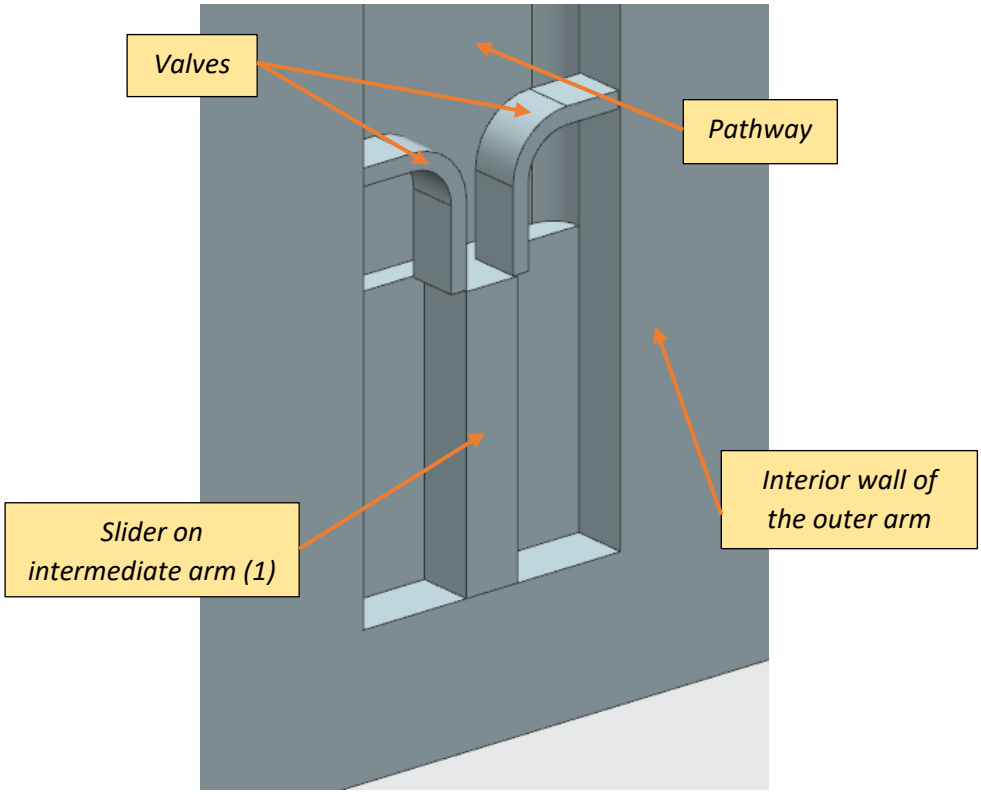

Figure 6.11 Inside view of the *slider* attached to *the intermediate arm (1)* exterior walls passing through the *valves* along the *pathway* of the *outer arm*. Source: own

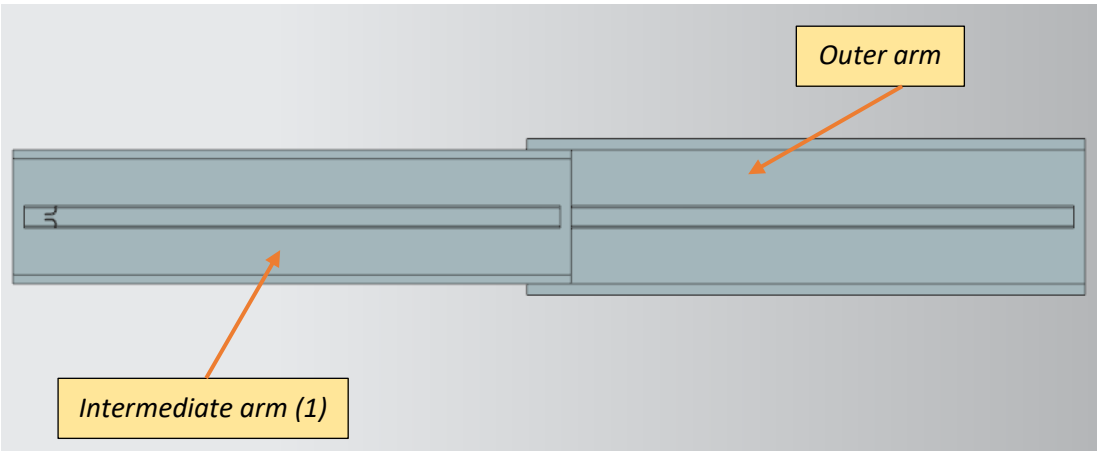

Figure 6.12 Cross-sectional side view of the deployment mechanism of the *extendable arm*. Source: own

For maximum length extension, the position of the *sliders* and the *valves* must be on the opposite end of each other.

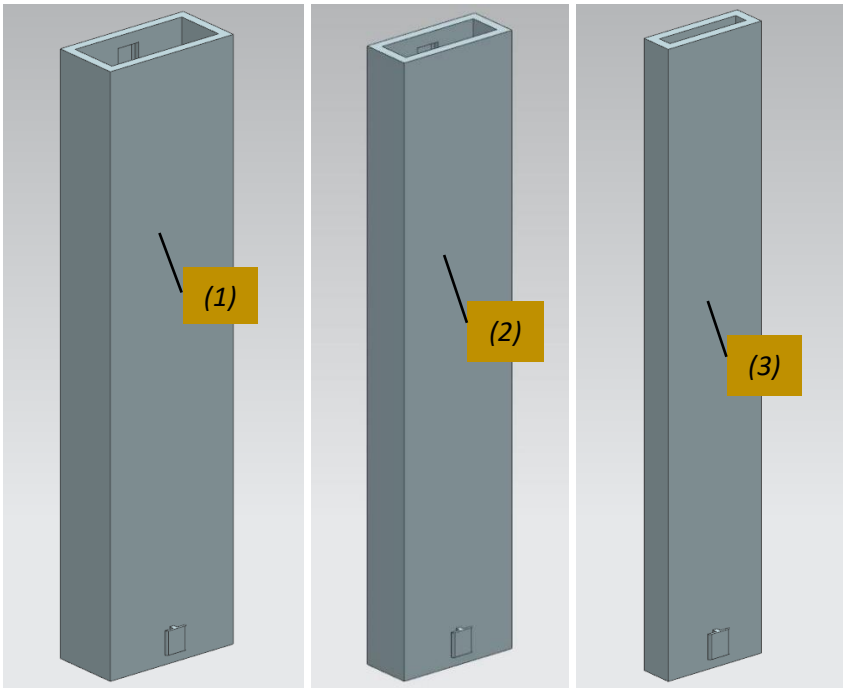

Figure 6.13 Design of the three *intermediate arms*. Source: own.

The *final arm* is designed to be a solid rectangular body with *sliders* attached to the exterior walls. The *sliders* will move along the *pathways* on the interior walls of *the intermediate arm (3).*

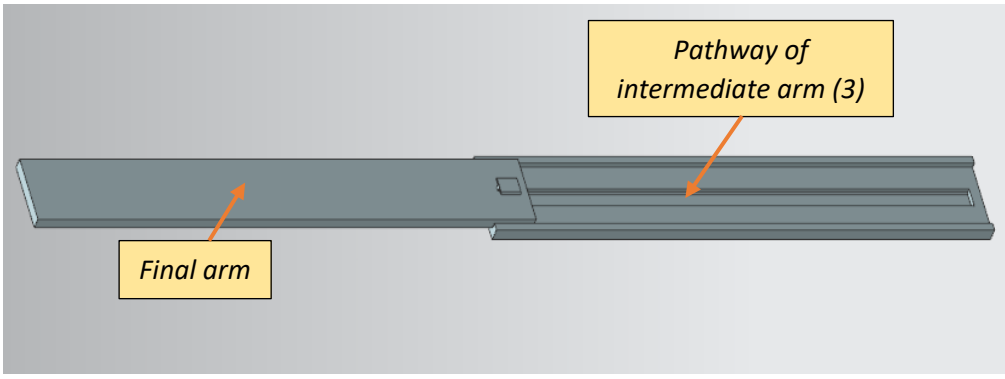

Figure 6.14 View of the *final arm* extension. Source: own

With the *valves* locking each arm in place, this will give more rigidity to the structure at the same time, allowing the sail to be stretched to the fullest. Consequently, it could avoid any wrinkles on the sail, which might affect the reflectivity of the photon radiated from the Sun onto the sail.

To maximize the efficiency of the payload, the *extendable arms* must be made of a light yet rigid material that could hold the sail material. The material chosen for the *extendable arm* structure is UHM (Ultra-high-modulus) carbon fibre. Carbon fibres have several advantages, including high stiffness, high tensile strength, low weight, high-temperature tolerance and low thermal expansion [41]. The UHM type carbon fibre has a Young's modulus greater than 450 GPa [41].

Another advantage in this design is that since the structures are made up of the same material, the *sliders* can be manufactured from the removed section of the *pathways*. In doing so, we can minimize any wasted material while reducing any environmental effect in the production of the material itself. Figure 6.15 shows the fully deployed *extendable arms* with the sail fully stretched.

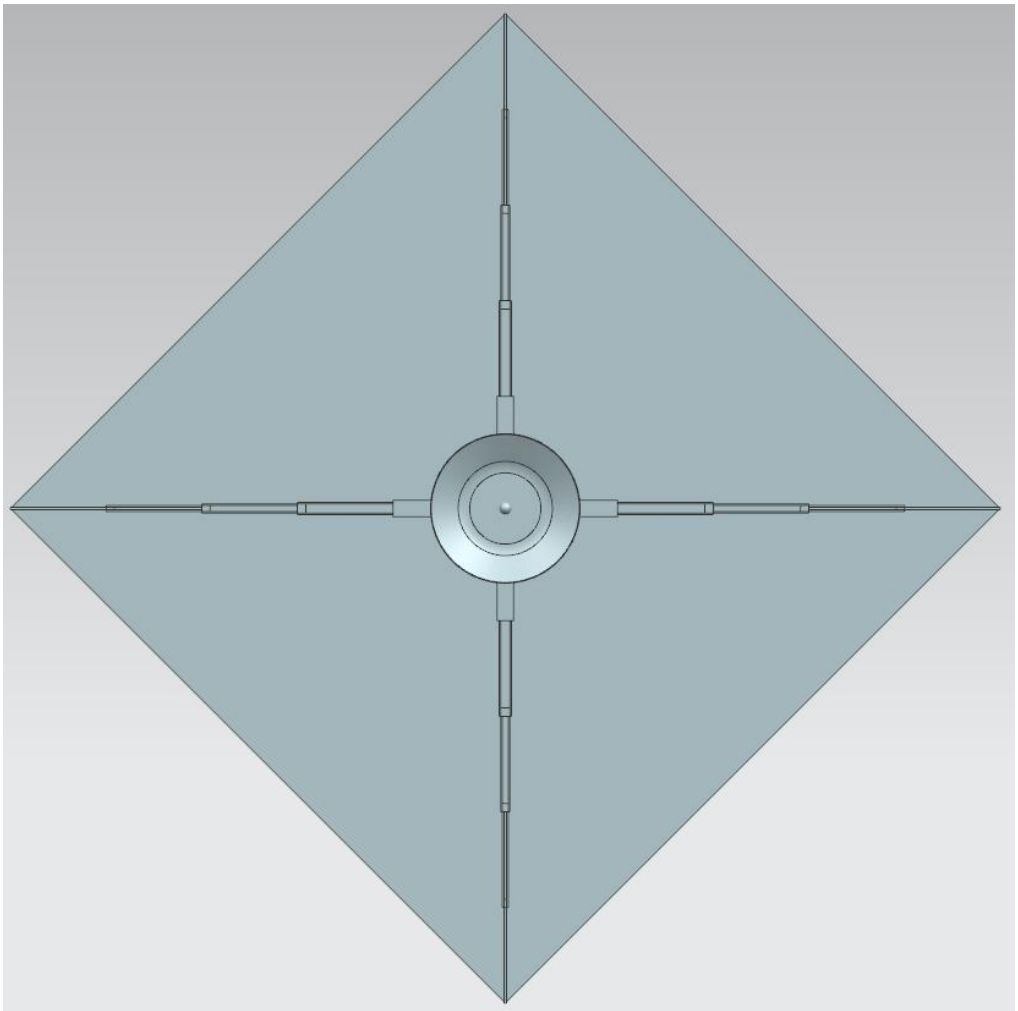

Figure 6.15 Fully deployed *extendable arms* with sail. Source: own

As you can see in figure 6.15, the geometry of the sail is square-shaped. The idea is adapted from Josep Pinyol Escala's work in which he states how the length structure of a square sail is approximately 20 % less than a circular sail for the same reflective area [23]. In theory, for a 20 % less length structure for a square sail, it would amount to a 20 % less mass structure than that of a circular sail for the same reflective area. Allowing the *extendable arms* to support the square sail on the diagonals provides more stability to the overall structure while granting the sail to be stretched to the full extent with the features (*pathways, sliders and valves)* incorporated into the *extendable arms* mechanism.

The material chosen for the sail is a combination of a Kapton and aluminium bilayer. For an optimum sail, the material must be light and thin together with a high reflective property. Kapton is a polyimide film that remains stable across a wide range of temperatures, from 4 to 673 K [42]. Another property of the Kapton is that it is regularly used as an insulator in vacuum environments due to its low outgassing rate, which releases a gas that was trapped or dissolved in a material [42]. The maximize the reflection of the photon onto the sail, the aluminium will be layered on the outer surface of the sail. The greater the number of photons reflected onto the sail, the greater the momentum gained by the payload for propulsion.

The idea of the sail is to have a thickness of 10 µm, together with an areal density of:

$$\sigma_{sail} = \sigma_{kapton} + \sigma_{aluminium} \text{ [g/m}^2\text{]}$$

With a length of 2.5 m for the *extendable arm* design, it can extend up to 11.9 m from the spacecraft centre during full deployment. This gives a total length value of 23.8 m for the diagonal of the square sail.

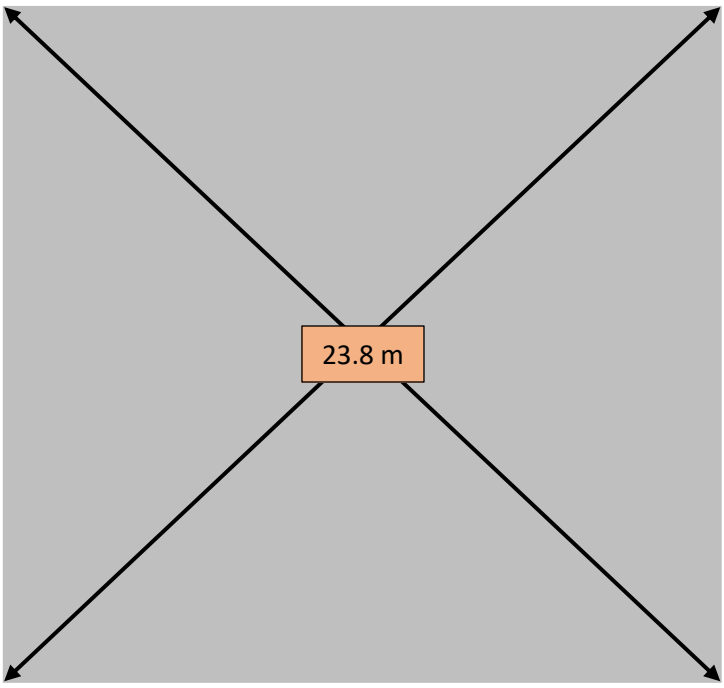

Figure 6.16 Sail illustration with the diagonal dimension length. Source: own

Using simple trigonometry, the area of the sail can be calculated by:

$$A_{sail} = (23.8cos45)x(23.8sin45) = 283.22 \text{ m}^2$$

This ultimately gives a sail area of around 280 m^2.

When the payload is fully deployed in space, it will then be guided to be injected into the orbit of Venus. I will neglect the variations on the trajectory of the payload to reach the orbit of Venus because I lack the knowledge to discuss such a matter. The theory is to get the payload as close to the Sun as possible, in this case, the orbit of Venus. This relates to the solar radiation flux intensity, equation **(7)**, which inversely decreases with squared distance.

Venus has an orbit with a semi-major axis of 0.72 AU [43]. Once the payload is injected into the orbit of Venus, it then makes a full rotation around the Sun before going for deep space trajectory, away from the Sun, headed for *TRAPPIST 1-e* (41 light years).

At a distance of 0.72 AU, the solar radiation flux intensity received by the payload can be calculated using equation **(7)**:

$$S_r = \frac{3.04\ x\ 10^{25}}{(0.72\ AU)^2}\ X\ \frac{(1\ AU)^2}{(1.496\text{x}10^{11}\ m)^2} = 2{,}620\ [\frac{W}{m^2}]$$

Assuming for a realistic value of 0.9 for the reflectivity of the sail (μ), the solar pressure of the sail at a distance of 0.72 AU can be measured by substituting the values into equation (8):

$$P_{rad} = \frac{1 + 0.9}{c} S_r = 16.6\ x\ 10^{-6}\ [\frac{N}{m^2}]$$

By combining equation **(9)** and **(10)** along with the sail area of 280 m^2, the characteristic acceleration of the payload is:

$$a_c = \frac{A}{m}\ x\ P_{rad} = \frac{280}{m}\ x\ (16.6\ x\ 10^{-6}) = \frac{4.65\ x\ 10^{-3}}{m}\ [\frac{m}{s^2}]$$

As you can see in the equation above, the characteristic acceleration, a_c of the payload decreases with mass. Therefore, the overall mass of the payload must be as light as possible to maximize acceleration. For a sail loading (σ) value of 0.1, the characteristic acceleration of the payload would be $1.66\text{x}10^{-4}$ m/s^2.

With a characteristic acceleration, a_c of $1.66\text{x}10^{-4}$ m/s^2 for the payload, and assuming for a simple linear trajectory, the approximate time taken for the payload to reach *TRAPPIST 1-e* can be calculated by:

$$S = ut + \frac{1}{2}at^2 \qquad \textbf{(21)}$$

Where *S*: displacement, *u*: initial velocity, *t*: time taken and *a*: acceleration

By converting the distance unit of light-years to meters (1 *ly* = 9.461x10^{15} m), this gives a value of 3.88x10^{17} m to reach *TRAPPIST 1-e* (41 light years). Assuming for a zero initial velocity and substituting these values into equation **(21)**, the time taken for the payload to reach its destination with a characteristic acceleration, a_c of 1.66x10^{-4} m/s^2 is:

$$t = \sqrt{\frac{2S}{a}} = \sqrt{\frac{2(3.88x10^{17})}{1.66x10^{-4}}}$$

$$t = 6.837x10^{10} \text{ s} \approx 2170 \text{ years}$$

Meanwhile, the estimated time for the payload to reach Neptune from the orbit of Venus:

$$t = \sqrt{\frac{2S}{a}} = \sqrt{\frac{2(29.38\ AU)}{1.66x10^{-4}} X \frac{(1.496x10^{11}\ m)}{1\ AU}}$$

$$t = 2.301x10^{8} \text{ s} \approx 7.3 \text{ years}$$

Where *S* is substituted with the difference in distance between the orbit of Venus to Neptune (refer figure 5.2). This gives a value of 29.38 AU. At this distance, the payload should roughly reach near the inner boundary of the Kuiper Belt.

Going back to chapter 5.4.1, the Kuiper Belt is situated between 30 to 50 AU from the Sun. Therefore, the time taken for the payload to reach the outer boundary of the Kuiper Belt is:

$$t = \sqrt{\frac{2S}{a}} = \sqrt{\frac{2(49.28\ AU)}{1.66x10^{-4}} x \frac{(1.496x10^{11}\ m)}{1\ AU}}$$

$$t = 2.98x10^{8} \text{ s} \approx 9.45 \text{ years}$$

In chapter 5.4.2, we did a short discussion regarding the Oort Cloud; the inner limit of the Oort Cloud begins at 2000 AU. Substituting this value into equation **(21)** gives:

$$t = \sqrt{\frac{2S}{a}} = \sqrt{\frac{2(2000\ AU)}{1.66x10^{-4}} x \frac{(1.496x10^{11}\ m)}{1\ AU}}$$

$$t = 1.90x10^{9}\ \text{s} \approx 60.2\ \text{years}$$

The estimate time for the payload to reach inner limits of the Oort Cloud will take approximately 60 years. On the other hand, the time taken for the payload to travel to the orbit of Venus can be calculated by:

$$S = vt \qquad \textbf{(22)}$$

Where *S*: displacement, *v*: velocity (of rocket), *t*: time taken

Assuming the conceptual spacecraft accelerates to a velocity of 12,000 m/s by the end of the upper stage, the estimate time taken for the spacecraft to reach the orbit of Venus can be calculated by equation **(22)**. Note that the velocity assumption is slightly higher than the required velocity to escape Earth's orbit, 11.2 km/s (v_{esc}). The displacement is the difference in distance between Earth and Venus's orbit, 0.28 AU.

$$t = \frac{S}{v} = \frac{0.28\ AU}{12{,}000} x \frac{(1.496x10^{11}\ m)}{1\ AU}$$

$$t = 3.49x10^{6}\ \text{s} \approx 40\ \text{days}$$

The estimated times calculated above are mere assumptions, neglecting the real trajectory required by a spacecraft to reach the orbit of Venus and ultimately head for deep space trajectory, away from the Sun, to *TRAPPIST 1-e* (41 light years). In addition, equations **(21)** and **(22)** does not include external factors into account such as cosmic radiation and solar wind. These factors may affect the performance of the spacecraft prototype and ultimately it would take a longer time to reach its destination.

Destination	**Estimated time taken**
TRAPPIST 1-e	2170 years
Neptune	7.3 years
Kuiper Belt (outer boundary)	9.45 years
Oort Cloud (inner limit)	60.2 years
Orbit of Venus	40 days

Table 6.2 Summary of estimated time taken for the spacecraft prototype to reach exoplanet *TRAPPIST 1-e*, Neptune, Kuiper Belt, Oort Cloud and orbit of Venus. Source: own

The approximate time calculated for the spacecraft prototype to reach its destination is based on assumptions that include; 0.9 sail reflectivity (μ) and 0.1 sail loading (σ) that would lead to a characteristic acceleration, a_c of 1.66×10^{-4} m/s^2. Meanwhile, the sail area is based on the design of the *extendable arm* that could extend up to 11.9 m span, from an initial length of 2.5 m.

To summarize, the design of the solar sail with its mechanism on the payload is heavily influenced by already existing spacecraft such as IKAROS, along with previous studies by Muhammad Nur Ikram and Josep Pinyol Escala regarding interstellar travel [22][23]. Table 6.3 shows the summary of the payload for last stage of flight.

Main body	Curved cylindrical body
Dimensions	Ø 1.4 m x 1.5 m, with a 4.5 m curvature
Sail material	Kapton and aluminium bilayer
Sail thickness	10 µm
Sail area	≈ 280 m^2 (square)
Method of deployment	Extendable arms
Material of sail support (*extendable arms*)	UHM type carbon fibre
Antenna	Placed on top of payload for navigation
Motor	To help deploy the *extendable arms*

Table 6.3 Characteristics and components of the scientific payload of the spacecraft. Source: own

The design, characteristics and components of the spacecraft for all stages is based on my humble approach to achieve interstellar travel. Although there are parts of interstellar travel not fully explained, especially when it comes to the spacecraft trajectory in space, I hope with further studies regarding this concept design, improvements can be made and the spacecraft can be realized to be sent to *TRAPPIST 1-e* one day. Table 6.4 shows the summary of the three stages of the conceptual spacecraft prototype.

STAGES	DESCRIPTION
LOWER STAGE 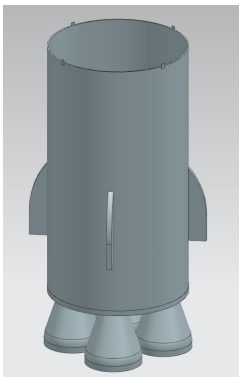	-body frame is made up of titanium -explosive bolts mounted to detach itself from the upper stage -fins on the side to reduce drag in the lower stage -exhaust nozzles are short to minimize expansion -chemical propulsion – liquid propellant engine (liquid oxygen and liquid hydrogen) -exhaust velocity: 4,550 m/s
UPPER STAGE 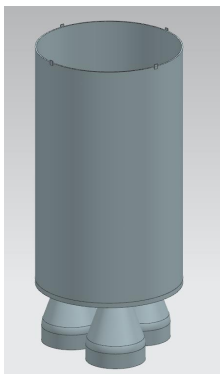	-body frame is made up of titanium -explosive bolts mounted to detach itself from the last stage -exhaust nozzles are long to maximize expansion -nuclear propulsion – nuclear fission. -exhaust velocity: 8,700 m/s
LAST STAGE 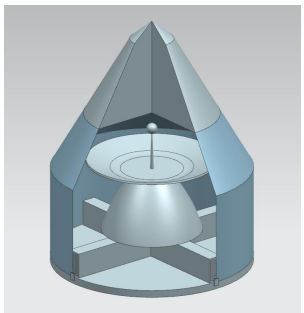	-explosive bolts mounted to remove the payload cover safely without damaging the payload -nose cone is to reduce drag in the lower stage -solar sail propulsion -sail area of around 280 m^2 (square) -*extendable arms* designed to deploy sail (UHM-type carbon fibre)

Table 6.4 Summary on the three stages of the conceptual spacecraft design. Source: own

7. CONCLUSION

Referring back to the objectives of this work, I have made a broad study on different methods of propulsion. The study ranges from already existing propulsion methods to other methods that seem to be impossible at the current time, such as antimatter propulsion and the interstellar ramjet. However, the limitations on the 'impossible' methods of propulsion are neglected in this work.

Throughout the study on the different propulsion methods, I have also included a brief description of the existing designs of spacecraft and the ones still in concept. For example, the Saturn V spacecraft was briefly mentioned in the chemical propulsion – liquid propellant engine section. By having a study on existing spacecraft, I was able to have a better understanding of the performance and the features of the spacecraft. Another example is Project Longshot using a nuclear propulsion – nuclear fusion. Project Longshot is only a concept, and no spacecraft has ever been built for the project; therefore, it is impossible to know the performance of the conceptual spacecraft. However, it helped me generate ideas on my humble approach to designing a spacecraft for interstellar travel.

After studying various method of propulsion, I have made a concise comparison between them. The comparison includes the advantages, drawbacks, and a critical factor that I think is important in this work: exhaust velocity, v_e. The reason is to have an overall perspective on the pros and cons of each method before deciding on which method would work best, in my opinion. Since I designed a multi-staged rocket, I had to choose a method for each stage. I chose chemical propulsion – liquid propellant engine for the lower stage, and the propellant choice is liquid oxygen and hydrogen. Nuclear fission propulsion is selected for the upper stage. The combination of propulsion for the upper and lower stage would help the spacecraft prototype reach the escape velocity of 11.2 km/s, which is the velocity required to escape Earth's orbit entirely. As for the last stage, propulsion of payload, I chose the solar sail method as it does not require carrying its propellant for propulsion; instead, it uses the photon energy released by the Sun to travel in space.

Since this work aims to achieve interstellar travel, I did a study on our solar system and the eight planets orbiting it. The reason behind this is to have an idea of the size, distance from the Sun and some characteristics of the planets, especially for the other seven. When discussing Earth, I included a short study on the requirements to leave the Earth's orbit. This is because we must first leave Earth and its gravitational influence before heading for interstellar travel. The velocity needed for a spacecraft to reach a circular orbit is 7.9 km/s and 11.2 km/s to entirely escape Earth's orbit. Combining the two stages (lower and upper stage), using chemical and nuclear propulsion would allow the spacecraft design to gain enough velocity to escape the Earth's orbit with the right mass ratio for each stage.

In addition to that, I also included a study on the possible destinations for the spacecraft concept. The two main groups discussed in this section are the neighbouring stars and exoplanets. After a brief research on the two groups, I choose exoplanet *TRAPPIST 1-e* as the destination for the spacecraft concept as it resembles Earth the most.

With previous studies in mind, I designed a spacecraft concept on my approach to achieving interstellar travel using a drawing software called Siemens NX12. To increase the efficiency of the spacecraft, I decided to design a multi-stage rocket instead of a single staged one. The reason is to reduce any unnecessary weight that needs to be carried by the spacecraft, which would ultimately affect the flight performance. As a result, the velocity increment for a multi-stage rocket is greater than that of a single-stage rocket. In addition, before choosing the material for the spacecraft body for the lower and upper stages, I made a comparison between two materials that are mainly used for a rocket body frame. By doing so, I could choose a material that I think would be more suitable for the spacecraft, in this case, titanium.

The major focus in this work is the last stage of flight that involves the scientific payload, which will be destined for *TRAPPIST 1-e*. The design of the last stage is influenced by previous work done by Muhammad Nur Ikram in "Design of A Solar Sailing Prototype for Interstellar Journey" and by Josep Pinyol Escala in "Prototip de veles solars impulsades per laser per al viatge interestel.lar" The deployment mechanism of the solar sail in my design depends on the four *extendable arms*. The arms are arranged 90° to each other on the payload so that it would support the sail on the diagonal. The geometry of the sail is square because it would require 20 % less length structure, and in theory, it would result in a 20 % less mass structure. This was discussed in Josep Pinyol Escala's work. The *extendable arms* design had key features that would increase the efficiency of the solar sail. These features include *pathways*, *sliders* and *valves*. The *valves* play an essential role in ensuring the arms are fully extended and locking them in place, hence allowing the sail material to be fully stretched.

The *extendable arms* are made of UHM carbon fibre. This is to make the payload as light as possible at the same time, making it able to support the sail. UHM carbon fibres have a few properties that make them suitable such as high tensile strength, low weight and high-temperature tolerance. On the other hand, the sail material is a combination of a Kapton and aluminium bilayer. Kapton is able to withstand a wide range of temperature. At the same time, aluminium has a good reflectivity property which makes it suitable to reflect the photon bombarded onto the sail while being much closer to the Sun.

The flight trajectory of the spacecraft will not be discussed in detail since it takes a lot of expertise to understand such a matter. However, my humble approach to the spacecraft concept's flight trajectory only involves leaving the Earth's orbit by gaining enough velocity increment by the end of the upper stage. Next, the fully deployed payload will enter the orbit of Venus to get closer to the Sun before making a deep space trajectory headed for its destination, *TRAPPIST 1-e*.

In conclusion, I have fulfilled all the objectives that were mentioned earlier in this work. I hope further studies regarding this work can be done to improve the design or the methods of propulsion. Besides that, I hope that future students doing their final year project regarding interstellar travel can use my work as a reference.

RECOMMENDATIONS

In this chapter, I would like to give some recommendations of future work as a continuation of this particular project. These recommendations may help improve the conceptual spacecraft prototype in terms of efficiency or design.

i. Calculate the mass of engine and propellant needed for the lower and upper stage of flight. In doing so, we can have a more accurate value of the dry mass of spacecraft. The equations related to this idea are equations **(18)** and **(19)**, which is the mass ratio for the lower and upper stage of flight.

ii. Study on the flight trajectories. This include the requirements to move from one orbit to another, especially when injecting into the orbit of Venus. This study will help to improve the efficiency of the conceptual spacecraft prototype to achieve interstellar travel.

iii. Components needed on the payload. The idea is to add any necessary components that would help the payload during interstellar flight. For example, in this work, I designed an antenna on top of the payload needed for the navigation. Further improvements are needed so that the spacecraft can be fully prepared for its journey to *TRAPPIST 1-e* (41 light years).

iv. Improvements on the sail mechanism. The idea is to make a study on the unfurling of the sail. This is to ensure that the sail can be fully optimized to reflect photons from the Sun. A study regarding the limiting factors of the solar sail should also be included to help improve the sail (material) and its mechanism.

I hope with the recommendations given above, future students can have an early idea on the continuation of this work. A brief description is given for each recommendation to help students generate more ideas.

ACKNOWLEDGEMENTS

First and foremost, I would like to take this opportunity to thank God Almighty for giving me the chance to be involved in a project work that is new to me. I would like to also give a special appreciation to my supervisor, Manuel Moreno Lupiáñez, for the support and guidance throughout making this report. He has given me suggestions and recommendations to help improve my writing for the report. Not to forget, I would like to appreciate the time spent by my supervisor to review my work and to answer my questions regarding any of my concern for the project report. In addition, a special thanks to all the lecturers and staff members of the Universitat Politècnica de Catalunya Vilanova i la Geltrú EPSEVG for teaching me and helping me finish my degree after four years.

Besides that, a massive token of appreciation to my beloved parents, Professor Salwani Binti Abdullah and Dr Wan Abd Malik, for their prayers and unconditional love for me to get through tough times and get back on track to finish my degree. I also appreciate the advice given by both my parents for me to stay focus on my studies.

I would also like to thank my friends, especially Farid, Fariq and Huda, for their help in realising this project. Being away from my family, my friends have always given me moral support up to this day. Their support has helped me get through challenges and difficulties in life and studies, especially during this pandemic era.

BIBLIOGRAPHY

[1] M. J. L. Turner, Springer, Rocket and Spacecraft Propulsion. Principles, Practice and New Developments, 2009.

[2] B. Greene, "Liquid Rocket Engines (J-2X, RS-25, general)," NASA, 15 May 2012. [Online]. Available: https://blogs.nasa.gov/J2X/2012/05/15/post_1337025676240/. [Accessed March 2021].

[3] S. May, "What Was the Saturn V?," NASA, 17 September 2010. [Online]. Available: https://www.nasa.gov/audience/forstudents/5-8/features/nasa-knows/what-was-the-saturn-v-58.html. [Accessed March 2021].

[4] "Apollo 11. July 20, 1969: One Giant Leap For Mankind," NASA, 20 July 2019. [Online]. Available: https://www.nasa.gov/mission_pages/apollo/apollo11.html. [Accessed March 2021].

[5] "Solid-propellant rocket," Wikipedia, [Online]. Available: https://en.wikipedia.org/wiki/Solid-propellant_rocket. [Accessed March 2021].

[6] K. F. Long, Deep Space Propulsion. A Roadmap to Interstellar Flight, Springer, 2011.

[7] K. F. Long, R. K. Obousy and A. Hein, "Acta Astronautica," *Project Icarus: Optimisation of nuclear fusion propulsion for interstellar missions,* 2011.

[8] O. L. Starinova, I. V. Gorbunova, M. K. Fain, R. M. Khabibullin and A. Y. Shornikov, *Application of electric propulsion for motion control of spacecraft which function on non Keplerian orbits,* 2017.

[9] "Electric Rocket Engine Basics," [Online]. Available: http://www.waynesthisandthat.com/ep2.htm. [Accessed March 2021].

[10] M. C. Hawley, J. Asmussen, J. W. Filpus, S. Whitechair and C. Hoekstra, *Review of Research and Development on the Microwave Electrothermal Thruster,* vol. 5, no. 6, 1989.

[11] Serhan yıldız, Ibrahim Koç, Omer Ozkan and Murat Celik, *Electrothermal propulsion system selection for communication satellite NSSK maneuver using multi criteria decision making method,* 2015.

[12] S. Anthony, "NASA's NEXT ion drive breaks world record, will eventually power interplanetary missions," ExtremeTech, 28 December 2012. [Online]. Available: https://www.extremetech.com/extreme/144296-nasas-next-ion-drive-breaks-world-record-will-eventually-power-interplanetary-missions. [Accessed March 2021].

[13] E. Ahedo, "EPIC Lectures Series," *Hall Effect Thrusters ,* 2017.

[14] S. Loff, "New and Improved Antimatter Spaceship for Mars Missions," NASA, 14 April 2006. [Online]. Available: https://www.nasa.gov/exploration/home/antimatter_spaceship.html. [Accessed March 2021].

[15] G. L. Matloff, Deep Space Probes To the Outer Solar System and Beyond, Springer, 2005.

[16] S. Hacyan, "Acta Astronautica," *Equations of motion of a hybrid relativistic rocket and Bussard ramjet,* 2009.

[17] Jimodell, "Interstellar Ramjet," 29 January 2007. [Online]. Available: http://starsdestination.blogspot.com/2007/01/interstellar-ramjet.html. [Accessed March 2021].

[18] A. Caruso, A. A. Quarta, G. Mengali and M. Ceriotti, "Aerospace Science and Technology," *Shape-based approach for solar sail trajectory optimization,* 2020.

[19] T. Hirai, M. J. Cole, M. Fujii, S. Hasegawa, T. Iwai, M. Kobayashi, R. Srama and H. Yano, "Planetary and Space Science," *Microparticle impact calibration of the Arrayed Large-Area Dust Detectors in INterplanetary space (ALADDIN) onboard the solar power sail demonstrator IKAROS,* 2014.

[20] Y. Tsuda, O. Mori, R. Funase, H. Sawada, T. Yamamoto, T. Saiki, T. Endo, K. Yonekura, H. Hoshino and J. Kawaguchi, "Acta Astronautica," *Achievement of IKAROS — Japanese deep space solar sail demonstration mission,* 2012.

[21] Y. Tsuda, O. Mori, H. Sawada, T. Yamamoto, T. Saiki, T. Endo and J. Kawaguchi, "Acta Astronautica," *Flight status of IKAROS deep space solar sail demonstrator,* 2011.

[22] M. N. I. B. Imran, *Design of A Solar Sailing Prototype for Interstellar Journey,* TFG, EPSEVG UPC, June 2020.

[23] J. P. Escala, *Prototip de veles solars impulsades per làser per al viatge interestal.lar,* TFG, EPSEVG UPC*,* February 2020.

[24] A. Barnett, "Our Solar System," NASA, 17 February 2021. [Online]. Available: https://solarsystem.nasa.gov/solar-system/our-solar-system/overview/. [Accessed April 2021].

[25] S. Wild, "The solar system: Facts about our cosmic neighborhood," LiveScience, 10 July 2020. [Online]. Available: https://www.livescience.com/our-solar-system.html. [Accessed April 2021].

[26] D. M. Aderin-Pocock, "8 Solar System facts to wow students," teachwire, [Online]. Available: https://www.teachwire.net/news/8-solar-system-facts-to-wow-students. [Accessed April 2021].

[27] A. Lacroix, "Planets distance," [Online]. Available: https://www.dreamstime.com/planets-distance-planets-solar-system-their-distance-to-sun-image171015660. [Accessed April 2021].

[28] C. Q. Choi, "Dwarf Planet Pluto: Facts About the Icy Former Planet," 14 November 2017. [Online]. Available: https://www.space.com/43-pluto-the-ninth-planet-that-was-a-dwarf.html. [Accessed April 2021].

[29] P. Dyches, "10 Things to Know About the Kuiper Belt," NASA, 14 December 2018. [Online]. Available: https://solarsystem.nasa.gov/news/792/10-things-to-know-about-the-kuiper-belt/. [Accessed April 2021].

[30] "Kuiper Belt and Oort Cloud in context," 10 December 2014. [Online]. Available: http://www.esa.int/ESA_Multimedia/Images/2014/12/Kuiper_Belt_and_Oort_Cloud_in_context. [Accessed April 2021].

[31] A. Barnett, "Oort Cloud," NASA, 6 June 2019. [Online]. Available: https://solarsystem.nasa.gov/solar-system/oort-cloud/overview/. [Accessed April 2021].

[32] "Mission Status," NASA, [Online]. Available: https://voyager.jpl.nasa.gov/mission/status/. [Accessed April 2021].

[33] "What Is an Exoplanet?," NASA, 4 June 2020. [Online]. Available: https://spaceplace.nasa.gov/all-about-exoplanets/en/. [Accessed May 2021].

[34] L. Sessions and S. Gonzaga, "Alpha Centauri, Star System Closest To Our Sun," EarthSky, 7 April 2021. [Online]. Available: https://earthsky.org/brightest-stars/alpha-centauri-is-the-nearest-bright-star/. [Accessed May 2021].

[35] L. Sessions, "The Enduring Mystique Of Barnard's Star," EarthSky, 14 November 2018. [Online]. Available: https://earthsky.org/astronomy-essentials/barnards-star-closest-stars-famous-stars/. [Accessed May 2021].

[36] P. Brennan, "What is an Exoplanet?," NASA, 2 April 2021. [Online]. Available: https://exoplanets.nasa.gov/what-is-an-exoplanet/planet-types/overview/. [Accessed May 2021].

[37] P. Brennan, "Gas Giant," NASA, 22 March 2021. [Online]. Available: https://exoplanets.nasa.gov/what-is-an-exoplanet/planet-types/gas-giant/. [Accessed May 2021].

[38] P. Brennan, "51 Pegasi b," NASA, [Online]. Available: https://exoplanets.nasa.gov/exoplanet-catalog/7001/51-pegasi-b/. [Accessed May 2021].

[39] P. Brennan, "Neptune-like," NASA, 22 March 2021. [Online]. Available: https://exoplanets.nasa.gov/what-is-an-exoplanet/planet-types/neptune-like/. [Accessed May 2021].

[40] P. Brennan, "Kepler-1655 b," NASA, [Online]. Available: https://exoplanets.nasa.gov/exoplanet-catalog/6282/kepler-1655-b/. [Accessed May 2021].

[41] P. Brennan, "Super-Earth," NASA, 22 March 2021. [Online]. Available: https://exoplanets.nasa.gov/what-is-an-exoplanet/planet-types/super-earth/. [Accessed May 2021].

[42] P. Brennan, "Terrestrial," NASA, 22 March 2021. [Online]. Available: https://exoplanets.nasa.gov/what-is-an-exoplanet/planet-types/terrestrial/. [Accessed May 2021].

[43] "TRAPPIST-1 e," [Online]. Available: https://exoplanets.nasa.gov/eyes-on-exoplanets/#/planet/TRAPPIST-1_e/. [Accessed May 2021].

[44] P. Bhatt and A. Goe, "Carbon Fibres: Production, Properties and Potential Use," 9 June 2017. [Online]. Available: https://www.materialsciencejournal.org/vol14no1/carbon-fibres-production-properties-and-potential-use/. [Accessed June 2021].

[45] "Kapton," Wikipedia, [Online]. Available: https://en.wikipedia.org/wiki/Kapton. [Accessed June 2021].

[46] "Orbit of Venus," Wikipedia, [Online]. Available: https://en.wikipedia.org/wiki/Orbit_of_Venus. [Accessed June 2021].

ANNEX

COMPLETE SPACECRAFT CONCEPT (not to scale)

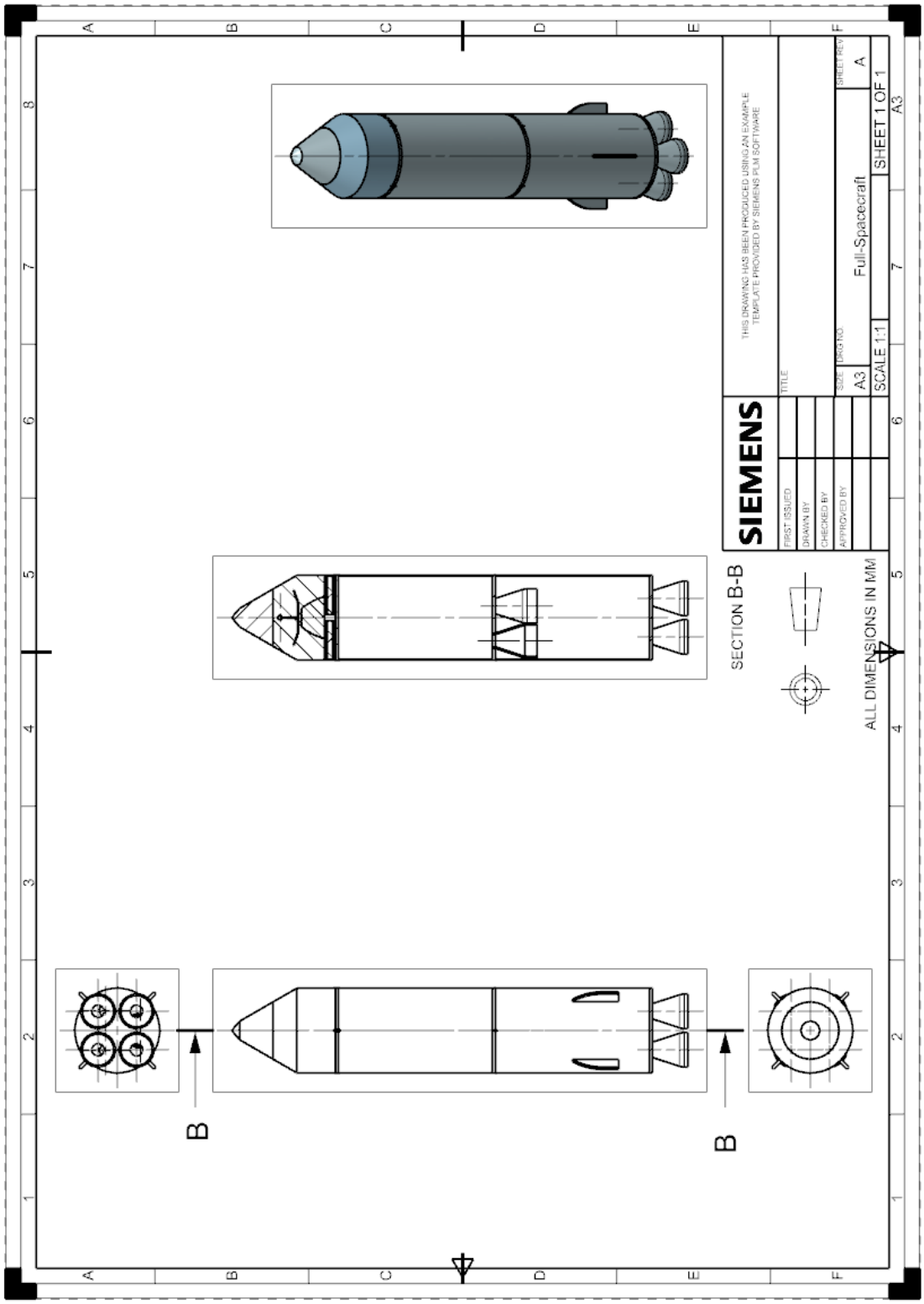

LOWER STAGE BODY FRAME (not to scale)

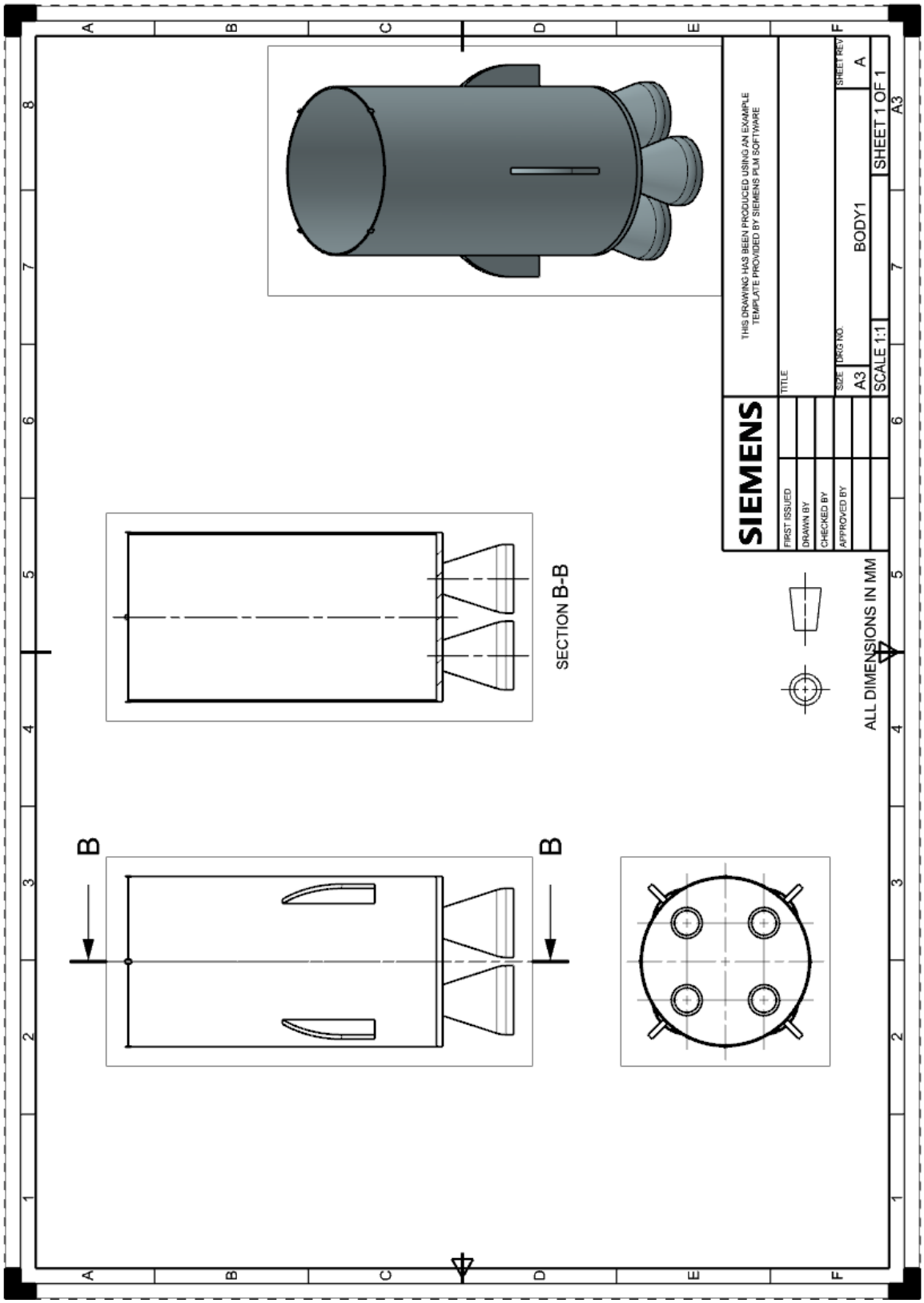

UPPER STAGE BODY FRAME (not to scale)

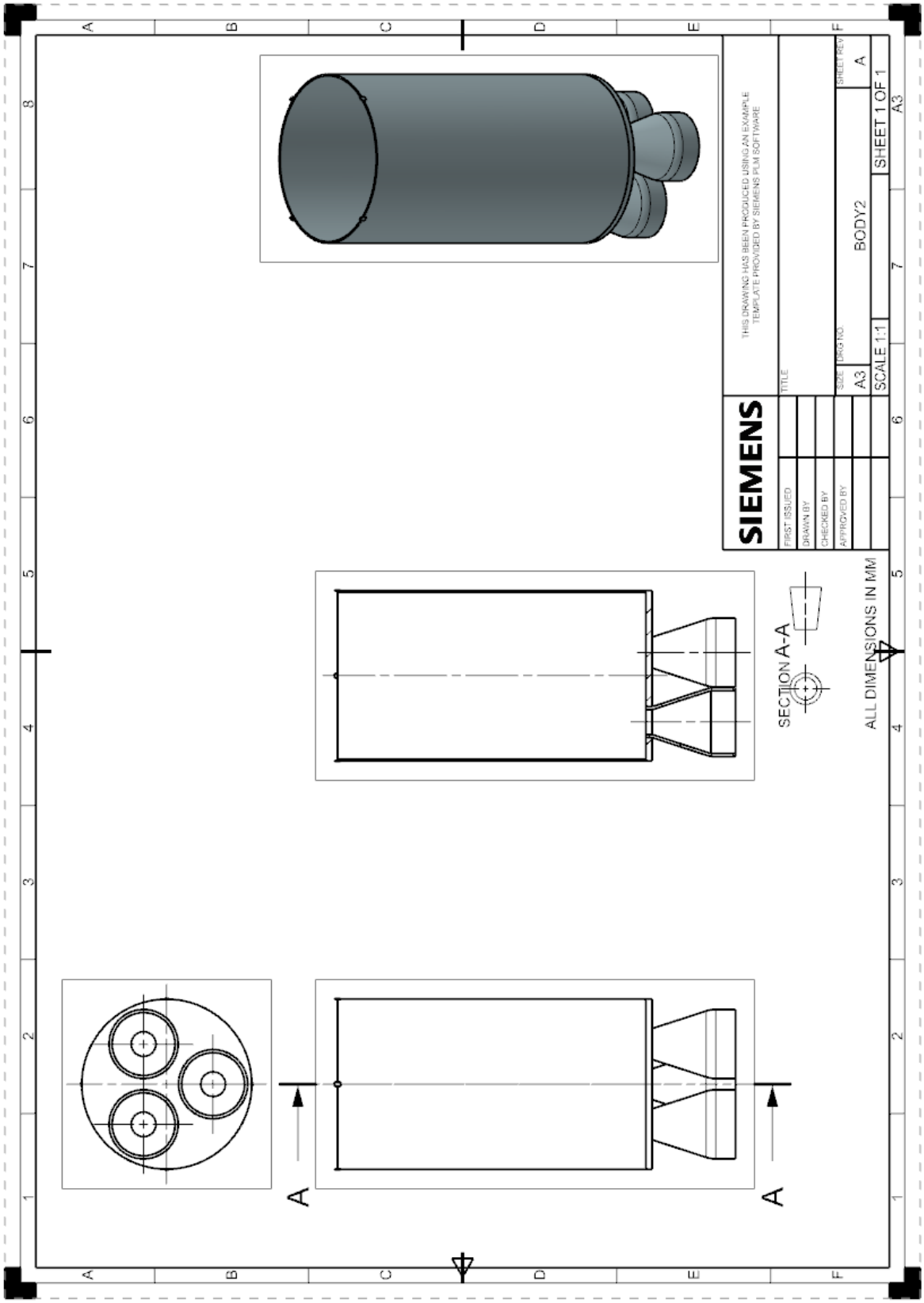

PAYLOAD-UNDEPLOYED (not to scale)

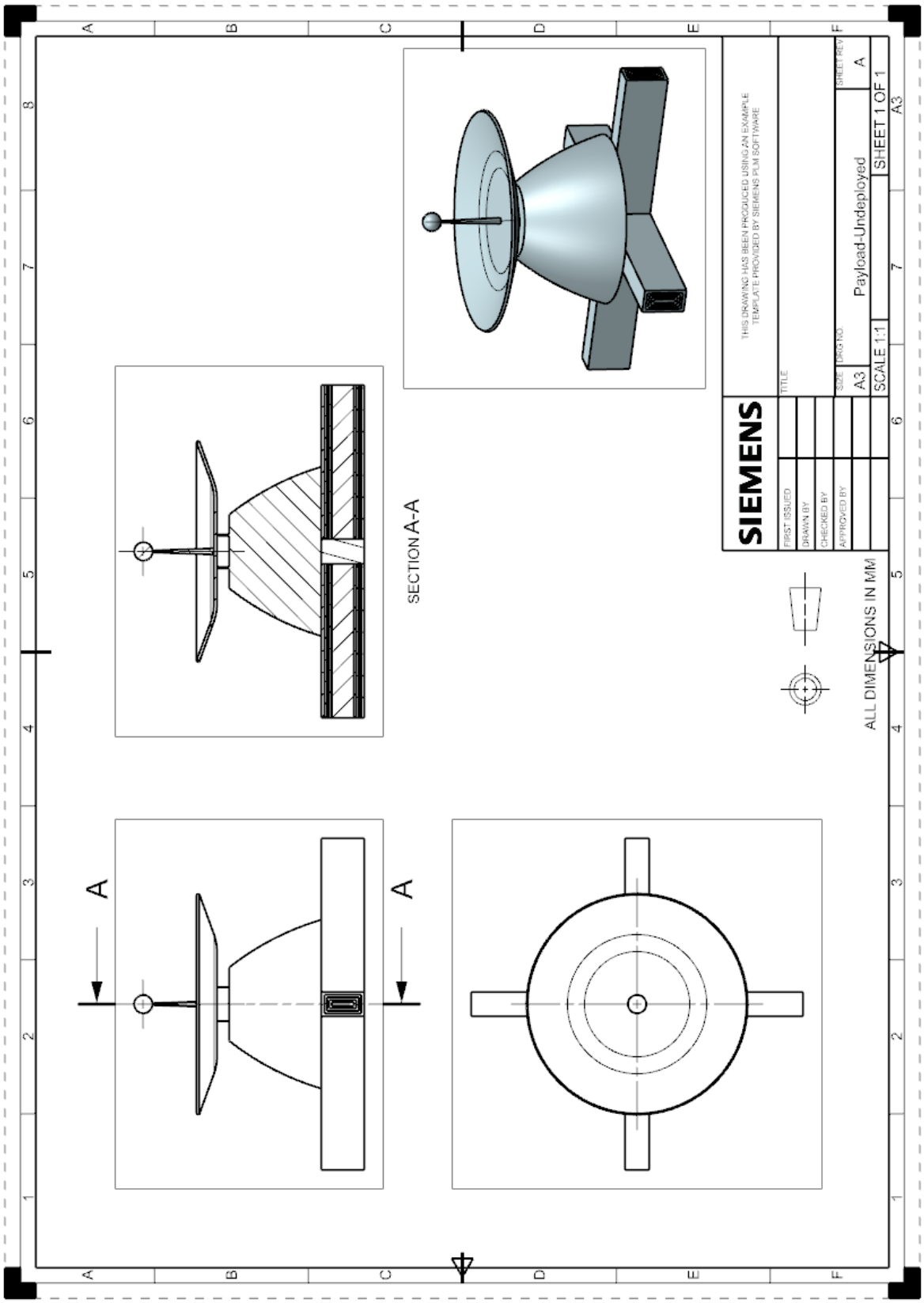

PAYLOAD-DEPLOYED (not to scale)

<u>Without sail</u>

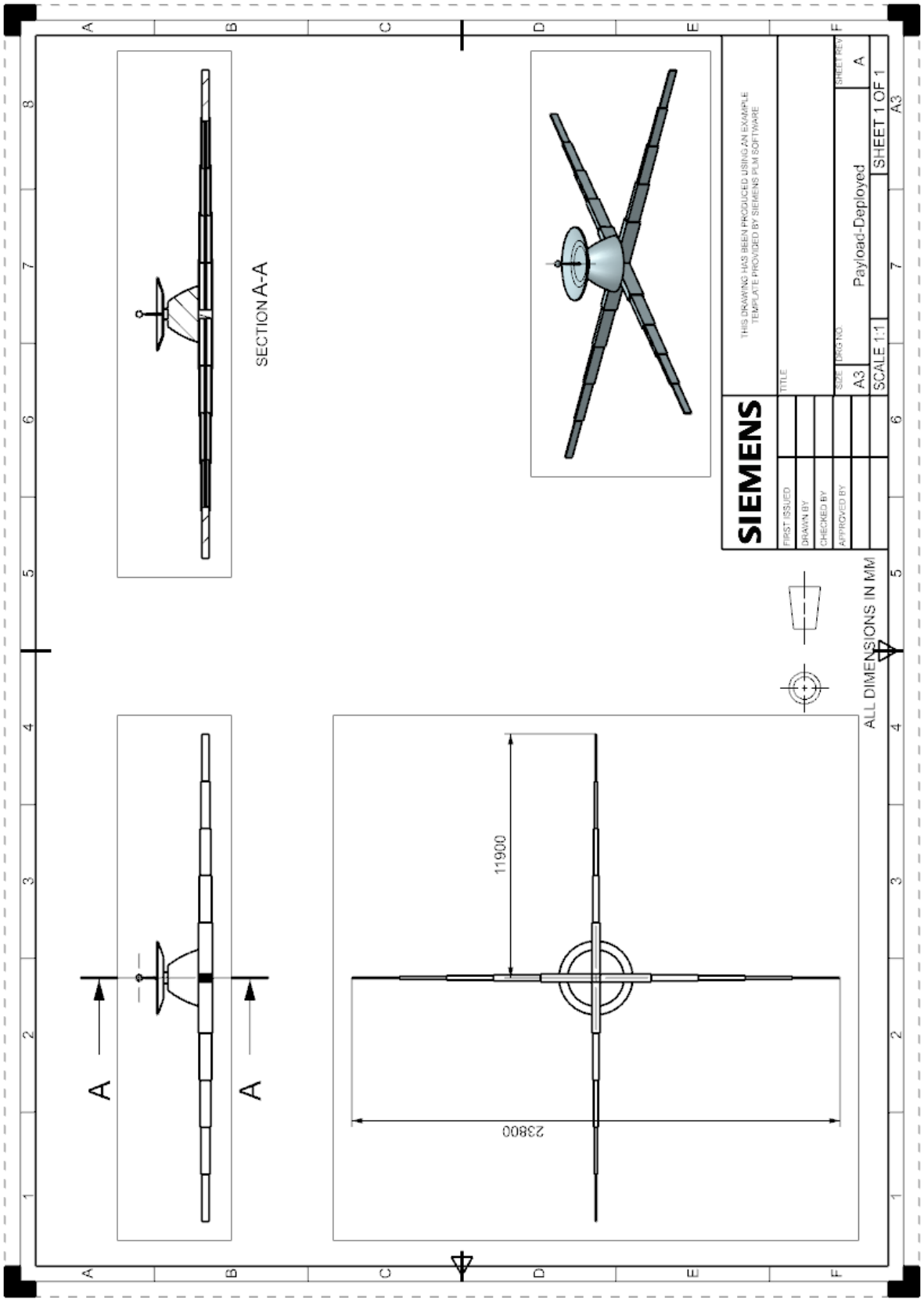

PAYLOAD-DEPLOYED (not to scale)

<u>With sail</u>

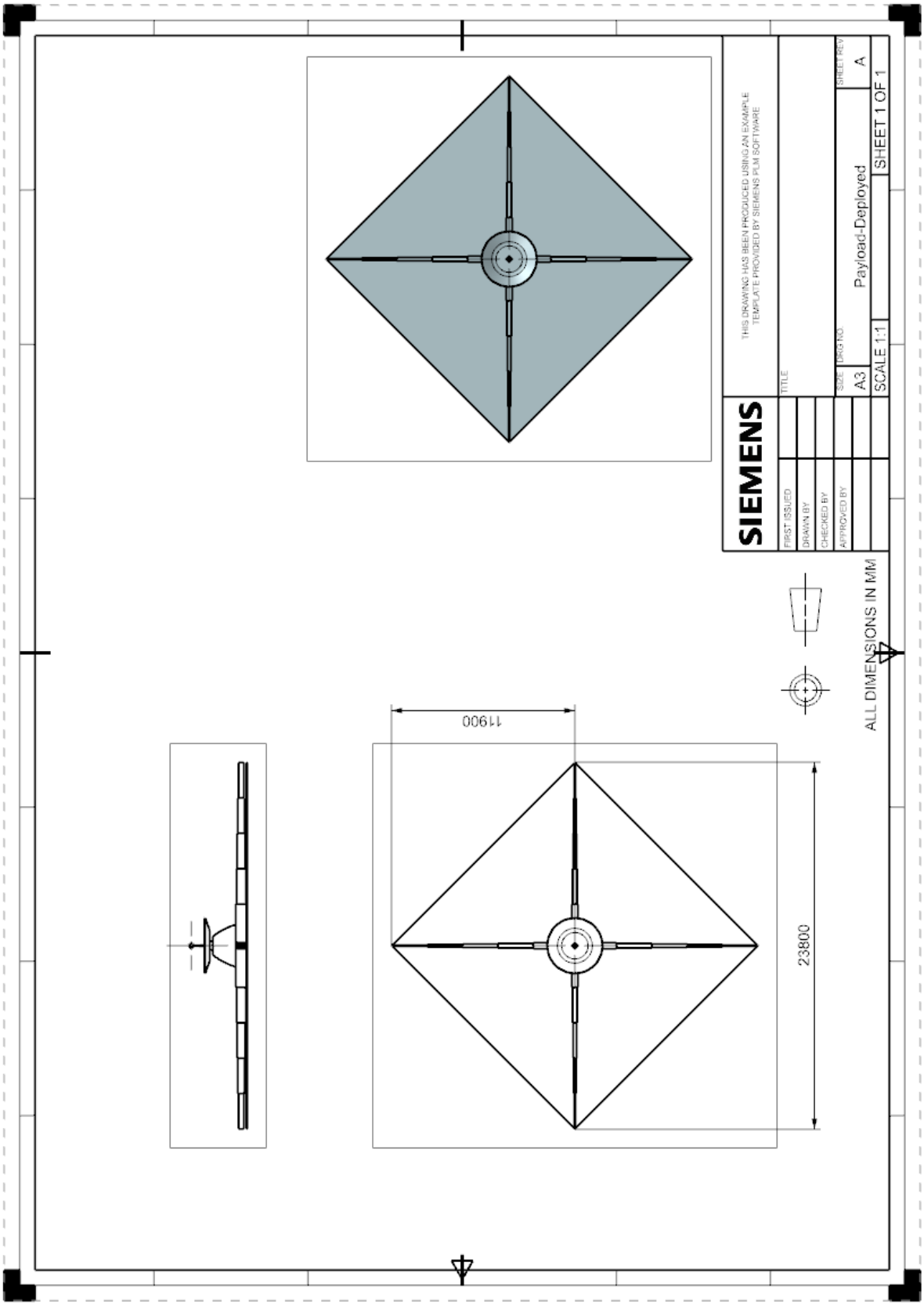

OUTER ARM (not to scale)

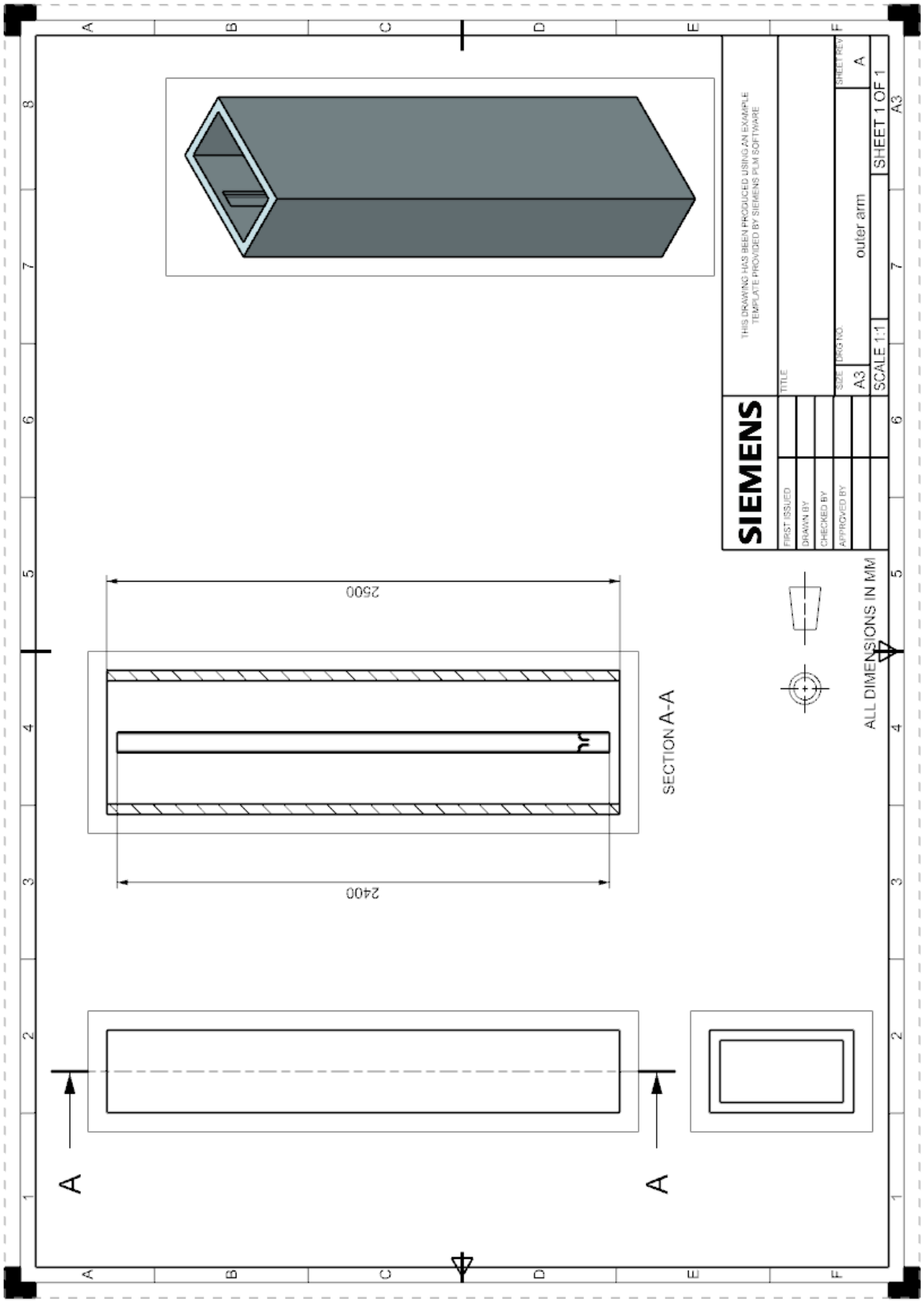

INTERMEDIATE ARM (1) (not to scale)

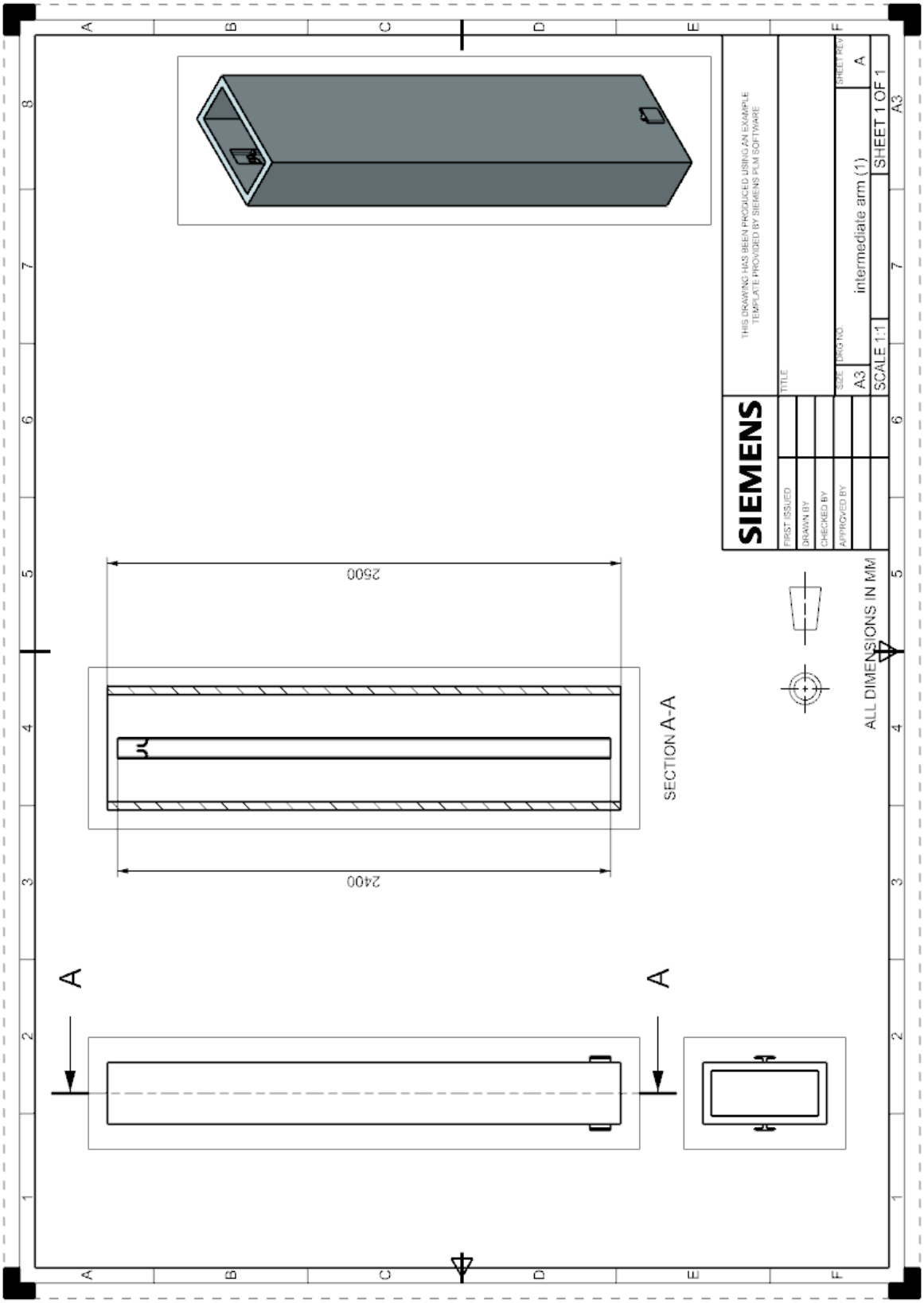

INTERMEDIATE ARM (2) (not to scale)

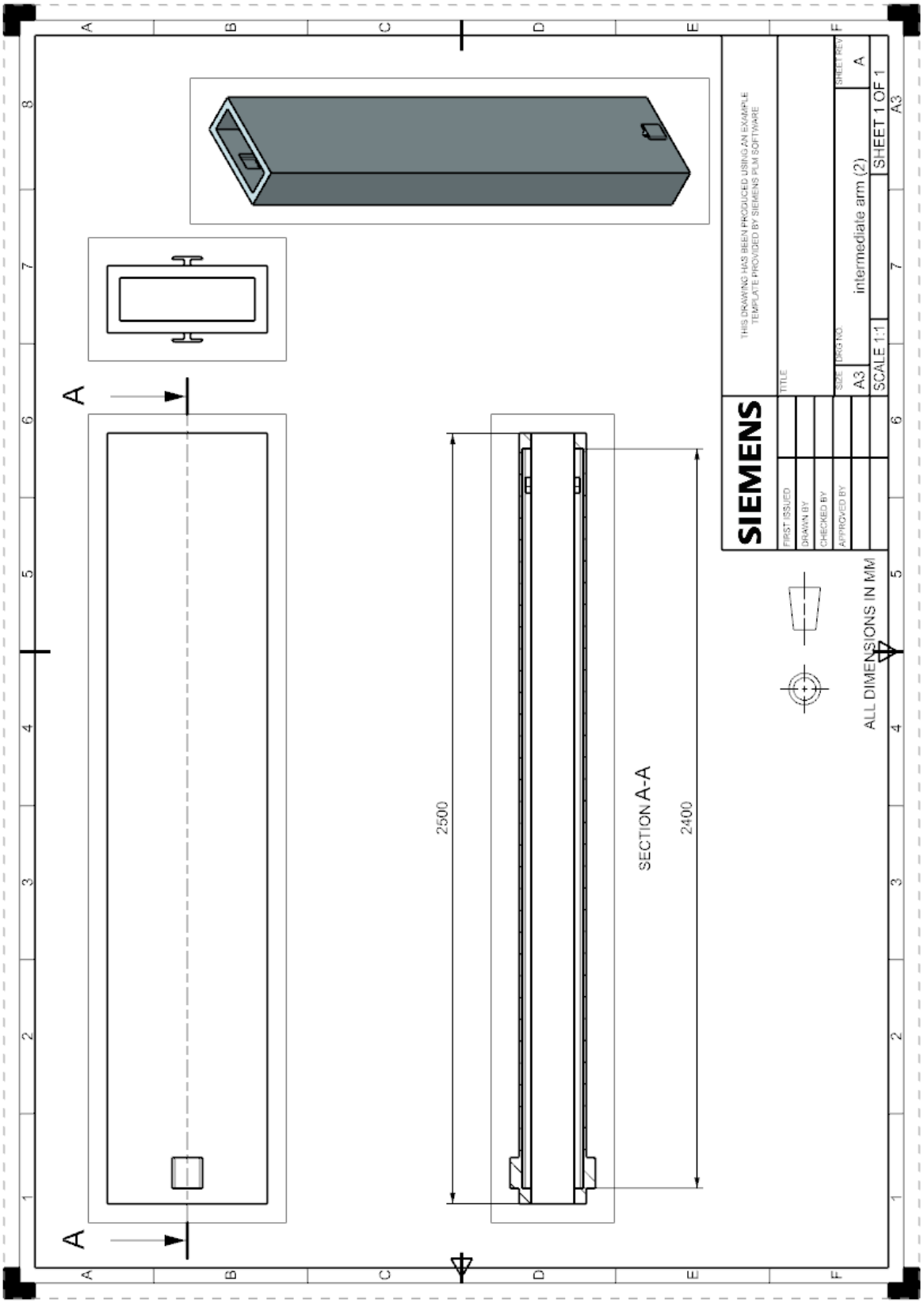

INTERMEDIATE ARM (3) (not to scale)

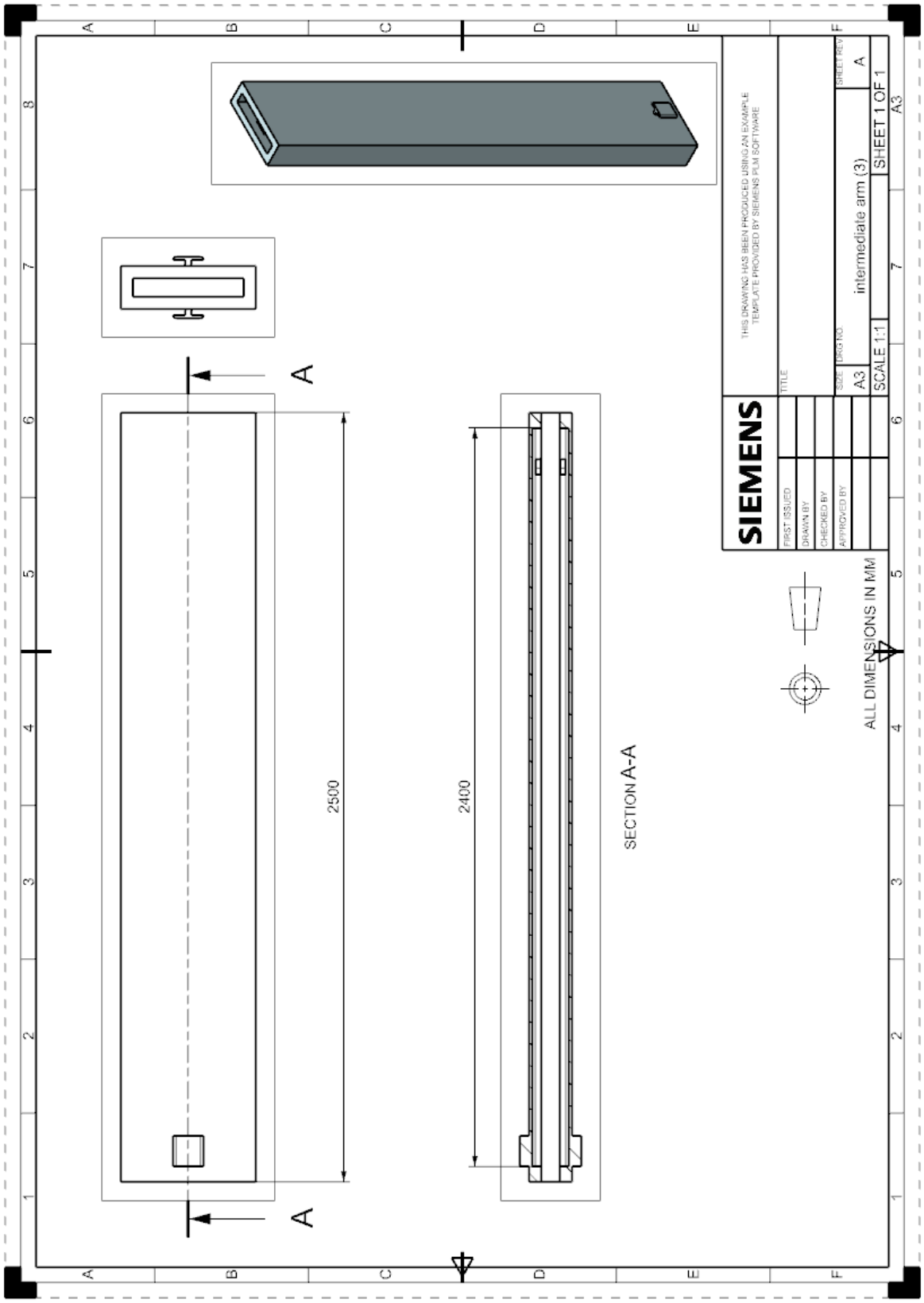

FINAL ARM (not to scale)