Treball de Fi de Màster

Màster universitari en Enginyeria Nuclear

Development of ageing management programme for MARIA research reactor

MEMÒRIA

Autor: eng. Bartłomiej Piwowarski
Director: eng. Michał Gryziński, phD (NCBJ)
Ponent: Lluis Batet

Escola Tècnica Superior
d'Enginyeria Industrial de Barcelona

Acknowledgements

I would like to thank following people who have helped me undertake this research and completion of the project:

My supervisor eng. Michał Gryziński, phD for all the remarks and comments regarding the project and the support during my research in National Centre for Nuclear Research.

Lluis Batet and all supporting personnel from Oficina de Relacions Internacionals I Admissions of ETSEIB.

My wife for urging me finishing the thesis and for her patience.

Abstract

The European Union Council adopted in 2014 new directive 2014/87/EURATOM [1] to establish a mechanism to incorporate lessons learned following the major accident (classified at the level 7 in the INES rating) in Fukusihma Daiichi Nuclear Power Plant. The continuous improvement to the nuclear safety introduced by a new directive will consist inter alia of system of Topical Peer Reviews (TPR) which first commenced in 2017 and the next ones will take place every six years thereafter. In respect to average age of nuclear power plants and research reactors in Europe, the topic of the first TPR was the ageing management of nuclear power plants and research reactors.

In 2015, National Centre for Nuclear Research received conditioned licence for operation of MARIA research reactor for next 10 years. One of the requirements was focused on performing the analysis of systems, structures and components (SSCs), in particular SSCs that might be susceptible to long-term degradation processes occurring at the effect of operation and environmental conditions. According to the condition, an output of the analysis shall be the basis for the elaboration of the ageing management programme (AMP).

The paper sums up the preparation for the above mentioned analysis and development of AMP for MARIA research reactor.

I. List of contents

ETSEIB

II. List of figures

III. List of tables

IV. Abbreviations

The list of abbreviations (in alphabetical order) is shown in the Table 1

Table 1. Abbreviations

Abbreviation	Meaning
AMP	Ageing Management Programme
AOO	Anticipated Operational Occurrences
DBA	Design Basis Accidents
DEJ	Departament Eksploatacji Obiektów Jądrowych (Nuclear Facilities Operation Department)
EJ2	The MARIA Reactor Operation Division
I&C	Instrumentation and Control
IAEA	International Atomic Energy Agency
IGALL	International Generic Ageing Lessons Learned
IRSRR	Incident Reporting System for Research Reactors
LBM	Laboratorium Badań Materiałowych (Materials Research Lab)
NCBJ	National Centre for Nuclear Research
NDE	Non-Destructive Examination
NRC	Nuclear Regulatory Commission
OLCs	Operational Limits and Conditions
PAA	Państwowa Agencja Atomistyki (National Atomic Energy Agency)
PDCA	Plan, Do, Check, Act
PSR	Periodic Safety Review
PZJ	Program Zapewnienia Jakości (Quality Assurance Programme for MARIA reactor)
R&D	Research and Development
SAR	Safety Analysis Report
SSC	Systems, Structures and Components
SSR	Specific Safety Requirements
TECDOC	Technical Document issued by IAEA
TPR	Topical Peer Review
UAN	Układ Automatyki Neutronowej (Nuclear instrumentation and control system)
ZSZ	Zintegrowany System Zarządzania (Integrated Management System for NCBJ)

1. Introduction

The research reactors have been playing a significant role in several fields of science; medicine; development of human resources and capabilities for nuclear power plants projects for almost seven decades now. Depending on the production and research mode, research reactors are required to provide indispensable services and therefore the actions for proper utilization and maintenance are crucial to assure the uninterrupted benefits for international society. In order to assure the safe operation as well as the highest factor of availability of these services, the activities focusing on the maintenance, ageing management, refurbishment and modernisation shall be applied.

Presently, all research reactors worldwide established maintenance plans and activities basing on the vendor recommendations, internal and external experiences, national and international standards. Although the maintenance does verify the current plant state, including the ability of SSCs to perform their intended safety functions. There is the need to apply more proactive approaches to manage the ageing of SSCs important to safety over the lifetime of the reactor. Therefore international institutions are paying high attention to the development and implementation of effective ageing management programme.

1.1. Motivation

1.1.1. International Atomic Energy Agency (IAEA)

According to the data provided by the IAEA [2] about 700 research reactors have been built to date, of which about 250 are operational or in temporary shutdown. More than 70% of operating research reactors has been operating for more than 30 years and nearly 50% of these unique research tools operate for more than 40 years. The feedback from periodic meetings on Code of Conduct, the Incident Reporting System for Research Reactors (IRSRR) and safety reviews organized by the IAEA indicated that human and ageing related factors are main root causes of the incidents in research reactors. Nearly 80% of all root causes reported to IRSRR are related to either human factor (40%) or ageing of components (39%). Additionally, during International Meeting on Code of Conduct in 2017 the Member States designated five top areas in which improvements are necessary [2], these are:

- Human and financial resources;
- Assessment of Safety;

- Safety culture;
- Decommissioning planning;
- Ageing management.

These periodic meetings are the main indicators for the IAEA to identify the issues and challenges among the Member States and update its own objectives, programmes and activities. One of the most recent activities which resulted from meeting was publication of new Specific Safety Requirements (SSR) for research reactors: Safety of Research Reactors (SSR-3) [3], which supersedes previous Safety of Research Reactors (NS-R-4) [4]. The publication, harmonized with the latest for nuclear power plants, states a number of the requirements related to research reactors. The general requirements for establishment of an ageing management were also imposed in this safety standard. The Requirement 86 of SSR-3 states:

"*The operating organization for a research reactor facility shall ensure that an effective ageing management programme is implemented to manage the aging of items important to safety so that the required safety functions of structures, systems and components are fulfilled over the entire operating lifetime of the research reactor.*"

1.1.2. European Union Council

In March 2011 Tōhoku earthquake and following tsunami initiated the sequences of events leading also to the Fukushima Daiichi Nuclear Power Plant accident. As a response to this tragic event, the new directive 2014/87/EURATOM was adopted by European Union Council in 2014 [1]. The directive establishes a mechanism to increase the efficiency of the exchange of operating experience as well as the incorporation of international standards.

The continuous improvement to the nuclear safety introduced by a new directive will consist inter alia of system of Topical Peer Reviews (TPR) which first commenced in 2017 and the next ones will take place every six years thereafter. In respect to average age of nuclear power plants and research reactors in Europe, the topic of the first TPR was the ageing management of nuclear power plants and research reactors. As the MARIA reactor operates on the nominal power that exceeds 1 MW_{th} it was a compulsory for NCBJ to prepare the report on the practices in ageing management.

The preparation of the report on ageing management in MARIA reactor was performed in close cooperation with the regulatory body. A lot of areas, including the ones highlighted in the Technical Specification for the National Assessment Reports [5] were identified as

unsatisfactory in comparison to the up to-date standards. This complex analysis gave a strong foundation to create a proper ageing management programme.

1.1.3. National law

The general requirements of nuclear safety of nuclear installations are combined in the Law of 29 November 2000 called "Atomic Law" [6] and its subsequent regulations. The requirements stated in Atomic Law and its subsequent regulations include provisions for radiological protection, nuclear safety, physical protection, non-proliferation and civil liability for nuclear damage. Moreover, the Atomic Law clearly states the responsibilities of the President of National Atomic Energy Agency (PAA) and gives the eligibility to President to control and supervise activities which involve exposure to ionizing radiations in Poland.

The Regulation of Council of Ministers of 11 February 2013 [7] on requirements for the commissioning and operation of nuclear facilities sets the requirement on establishing the management of ageing process by the operating organization. The ageing management process shall be included within the framework of the program of maintenance and repairs, research, supervision and control of SSC important to safety, taking into account the degradations occurring due to the ageing mechanisms. Although the requirement is set, no specific guidelines on ageing management were issued by the regulatory body.

1.1.4. Licence for the operation of MARIA research reactor

The previous licence for the operation of MARIA reactor became obsolete in March 2015. The new application for a licence was prepared and the President of PAA issued a allowance for the reactor utilization. The new Licence included a number of conditional requirements for operation. Basing on the Atomic Law, one of the requirements stand for the preparation of the analysis of SSCs, in particular SSCs that might be susceptible to long-term degradation processes occurring at the effect of operation and environmental conditions. As the consequence of this analysis the ageing management programme shall be elaborated. The requirement was added as an additional licence condition during the last process of relicensing in 2015 [8].

In addition to the above condition, the requirement on performing the periodic safety review (PSR) of MARIA reactor was issued. PSR integrates the assessment of the different areas of the nuclear safety aspects including the factors related to the ageing management. According to the IAEA guidelines [9], the following safety factors relating to the plant shall be taken into account (part omitted): "*(1) Plant design; (2) Actual conditions of systems structures and components (SSCs) important to safety; (3) Equipment qualification; (4) Ageing.*". The first PSR was due to be performed within four years since the Licence

was given.

1.1.5. Motivation summary

The aim of the presented work was establishment of ageing management programme in order to comply with Licence, Atomic Law and international standards. The project has been focused on the preparation of the framework for the ageing management programme basing on the activities performed already in MARIA reactor and issuing a new requirements to cope with the ageing. The AMP is based on the polish standards (e.g. Polish standards for welds of pipelines), IAEA safety standards and technical documents for research reactors as well as other international guidelines and experiences. Additionally, safety standards for nuclear power plants were used to support the development of the framework of the programme.

The work is divided into several chapters, which include the preparation of the methodology, describing the approach adopted on the purposes of the AMP as well as general and specific requirements and procedures within the scope. It is providing the insights on such processes as: development of management system for ageing control activities, selection and grouping of SSCs within the scope of programme, identification of ageing mechanisms relevant to process and environmental parameters of the research reactors. In the following chapters, the examples of physical ageing and obsolescence studies as well as guidelines for assurance of quality of the SSCs are presented.

1.2. MARIA research reactor

National Centre for Nuclear Research

MARIA research reactor is operated by National Centre for Nuclear Research in Otwock, near Warsaw. Founded in 1955, the Institute for Nuclear Research has been performing fundamental and applied research in the field of nuclear technologies including a sub-atomic physics (elementary particle physics, nuclear physics, hot plasma physics etc.). NCBJ offers a broad range of products, subassemblies or research infrastructures in the field of the nuclear technologies. The NCBJ POLATOM Radioisotope Centre is one of the most recognisable Polish brands as a manufacturer and distributor of the isotopes.

The declassification of the topic of peaceful use of nuclear energy resulted in purchase of the first polish nuclear reactor – EWA (acronym for experimental, water and atomic). It achieved the first criticality in the end of May 1958. Initially was 2 MW_{th} rated with the power uprated to 10 MW_{th}.

The experiences gained during the construction and operation of EWA reactor, international exchanges inter alia in MR reactor in Kurchatov Institute, as well as the results of the research programmes based on the critical stacks such as ANNA, MARYLA, AGATA gave a unique knowledge to polish scientists and engineers. The programme for accomplishment of the first polish designed reactor was started in 1965. Unlike EWA reactor, the construction of MARIA reactor was sole responsibility of Poland.

The bird's eye view on the NCBJ is presented in Fig. 1 [11]

MARIA research reactor

MARIA research reactor is the high flux pool type reactor with pressurized fuel channels cooled by light water. The light water and beryllium blocks are used as a moderator and graphite blocks are used as a reflector. Two main coolant systems were applied in the design of the reactor and therefore the reactor pool and fuel channels are cooled separately. The applied design of fuel channels cooling system allows to control the flow in each fuel channel in individual manner. Additionally, the MARIA reactor has a dedicated fuel elements leak detection system. Water samples are taken from each fuel channel and the status of the fuel is assessed based on delayed neutron in water measurements. The system enables the monitoring of the slow degradation of the fuel elements cladding during long-term operation in the reactor.

Figure 1. The bird's eye view on NCBJ. The MARIA research reactor buildings complex in the foreground

The construction of the reactor began in June 1970 and the first criticality was acquired on 18th December of 1974. The reactor was in operation up to 1985, when it was shut down for a major upgrade in systems: enlargement of beryllium matrix, changes in the cooling, ventilation and temperature control systems. Since 1992 the MARIA has been operated in regular manner.

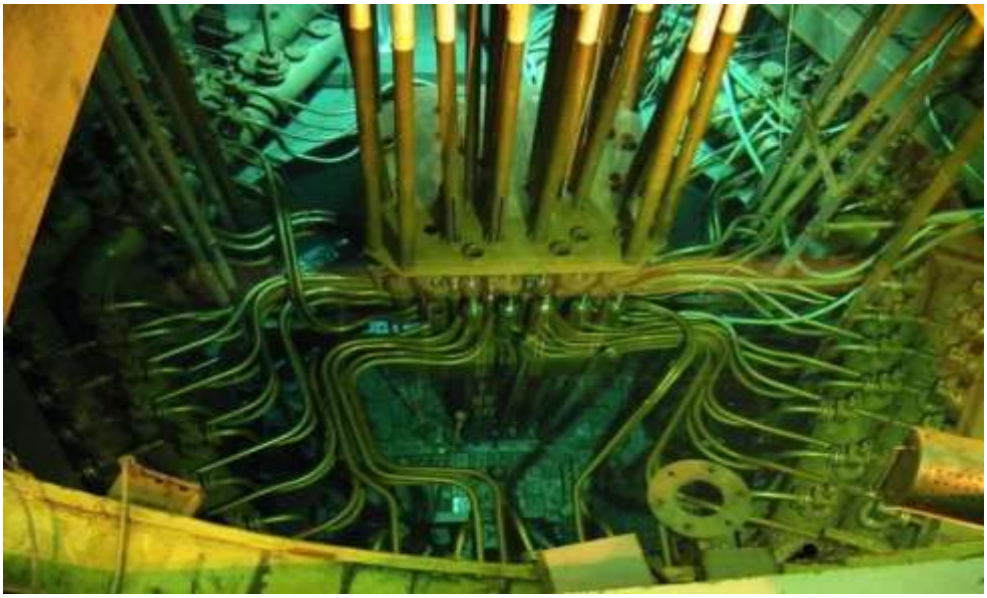

Figure 2. The MARIA reactor core view. In the foreground the fuel channels cooling system.

The authority for the operation of the reactor is assigned to Nuclear Facilities Operation Department (DEJ). The reactor is mainly used for scientific and educational purposes as well as a production of the radioisotopes. It is equipped with horizontal channels for research irradiation on neutron beams and vertical channels for short and long-term irradiation of target materials. There is a possibility to mount experimental loops in the reactor core. The main fields of activities performed in MARIA reactor are:

- Research on new medical procedures, e.g. in the field of BNCT, production of α- and ß-emitters (incl. holmium, gold, rhenium irradiations);
- Production of radioisotopes;
- Neutron activation analysis;
- Neutron radiography;
- Testing of fuel elements and structural materials for nuclear engineering;
- Neutron transmutation doping.

The current basic characteristics and data for MARIA reactor were placed in Table 2.

Table 2. The basic characteristic of MARIA reactor

Nominal power	**30 MW_{th}**
Maximal power of one fuel element	1.64 MW_{th}
Thermal neutron flux	2.5 x 10^{14} n/(cm^2s)
Fast neutron flux	2 x 10^{14} n/(cm^2s)
Thermal neutron flux at beam channel output	3-5 x 10^9 n/(cm^2s)
Moderator	H_2O 70% Beryllium 30%
Reflector	Graphite
Fuel material	UO_2-Al or U_3Si_2-Al
Control rods material	B_4C in aluminium cladding
Operation hours per year	Up to 5000 h

Primary, the high enriched uranium (80% ^{235}U) (HEU) was used to fuel up the core. The first core conversion that took place between 1999 and 2005 limited the enrichment to 36%. The period of 2009-2011 was used for the low enriched uranium (LEU) fuel testing and since 2012 the core has been in conversion to LEU fuel. With the fully converted core, the fuel used in MARIA reactor is either a uranium dioxide (UO_2, 19.7% ^{235}U) or silicide (U_3Si_2, 19.75% ^{235}U) compounds dispersed in a pure Al matrix with the length of fuel region 1000 mm. The enrichment and fuel compounds vary with the producer of the fuel.

MARIA research reactor core, building cross-sections and core top view are shown in Fig. 3 and Fig. 4 and Fig. 5 respectively.

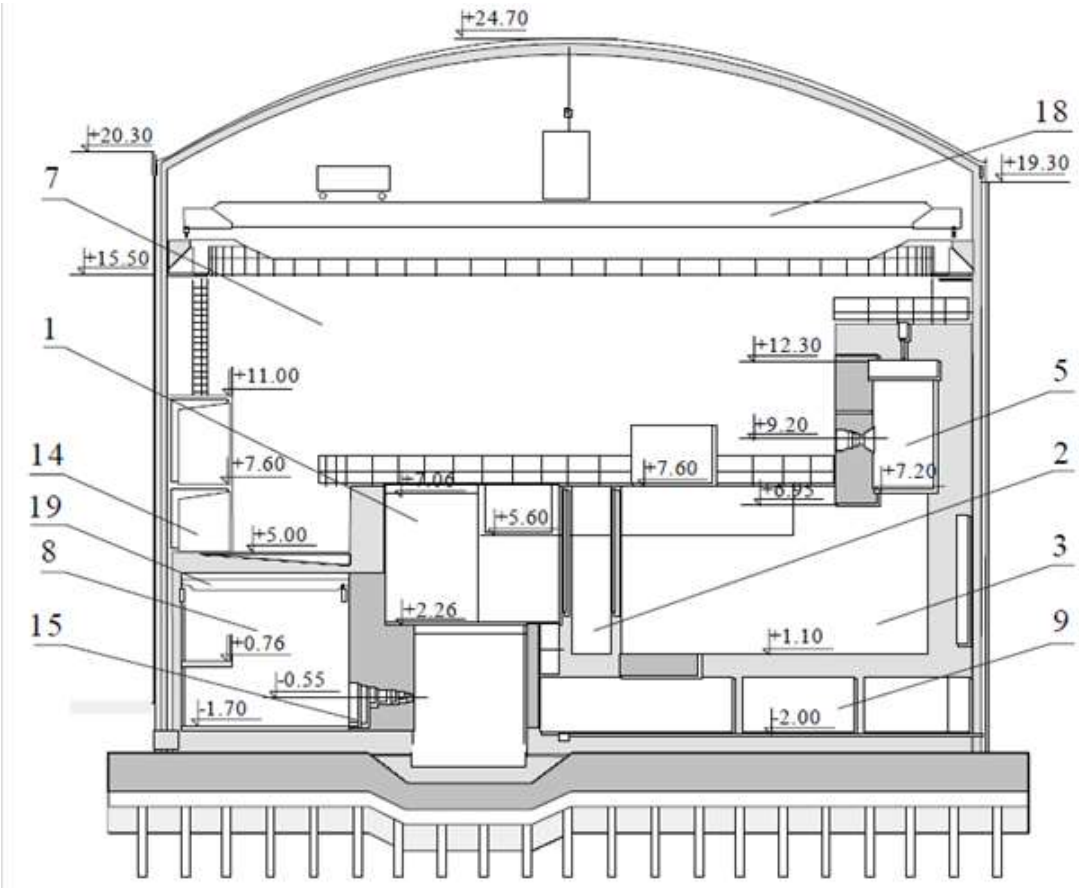

Figure 3. MARIA reactor building cross-section [10]

1 – reactor pool; 2 – water sluice; 3 – storage pool; 5 – dismantling cell; 7 – reactor hall; 8 – experimental hall; 9 – crawl duct; 14 – transducers room; 15 – horizontal channel recess; 18,19 – cranes

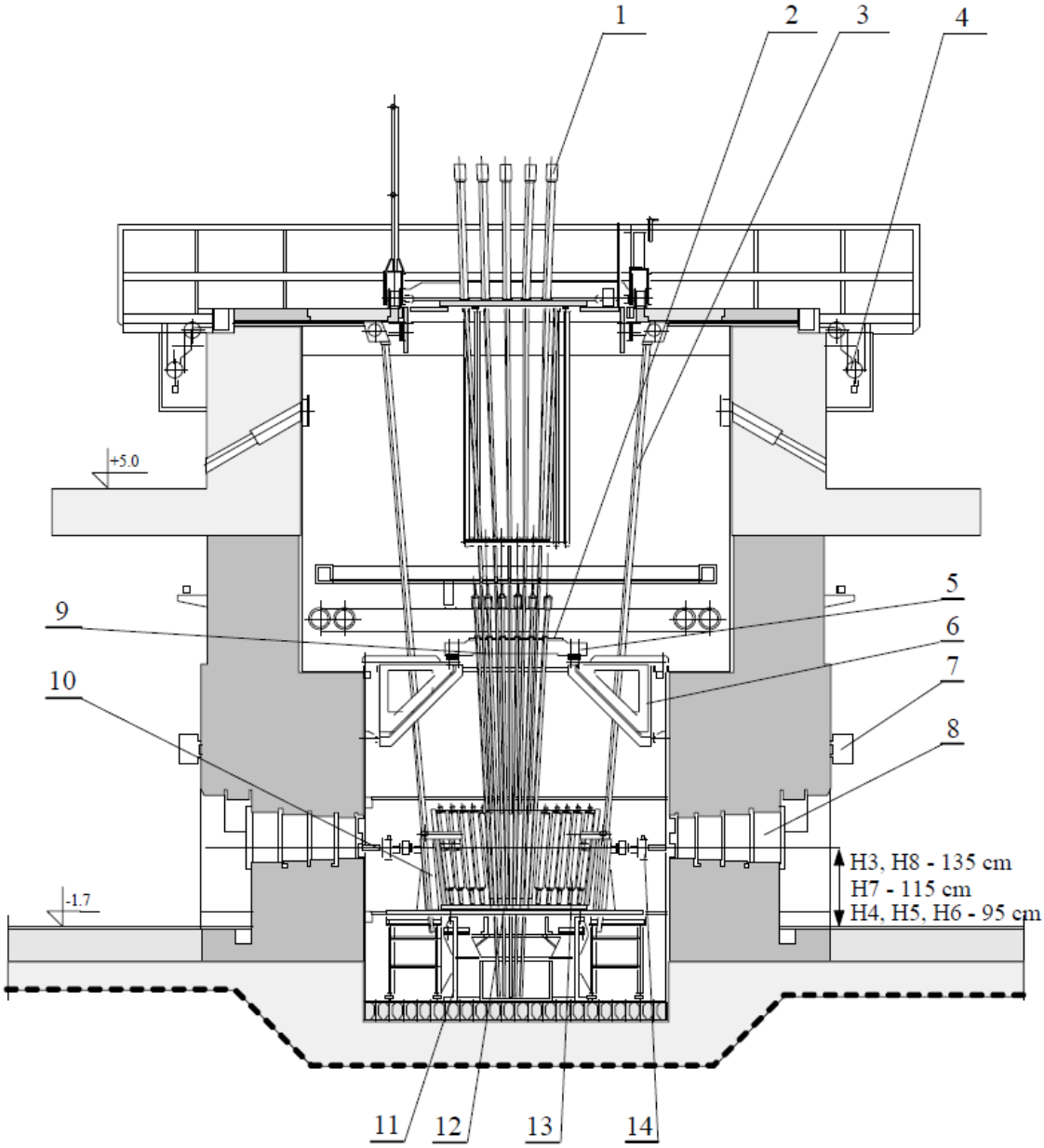

Figure 4. MARIA reactor core - cross section view [10]

1 – Control rods drive mechanisms; 2 – mounting plate; 3 – ionising chamber channel; 4 – ionising chamber drive mechanism; 5,6 – support and support plate; 7 – horizontal channels shutters mechanisms; 8 – horizontal channels shutters; 9 – fuel channels; 12, 13 – beryllium and graphite blocks; 14 – intermediate horizontal channel

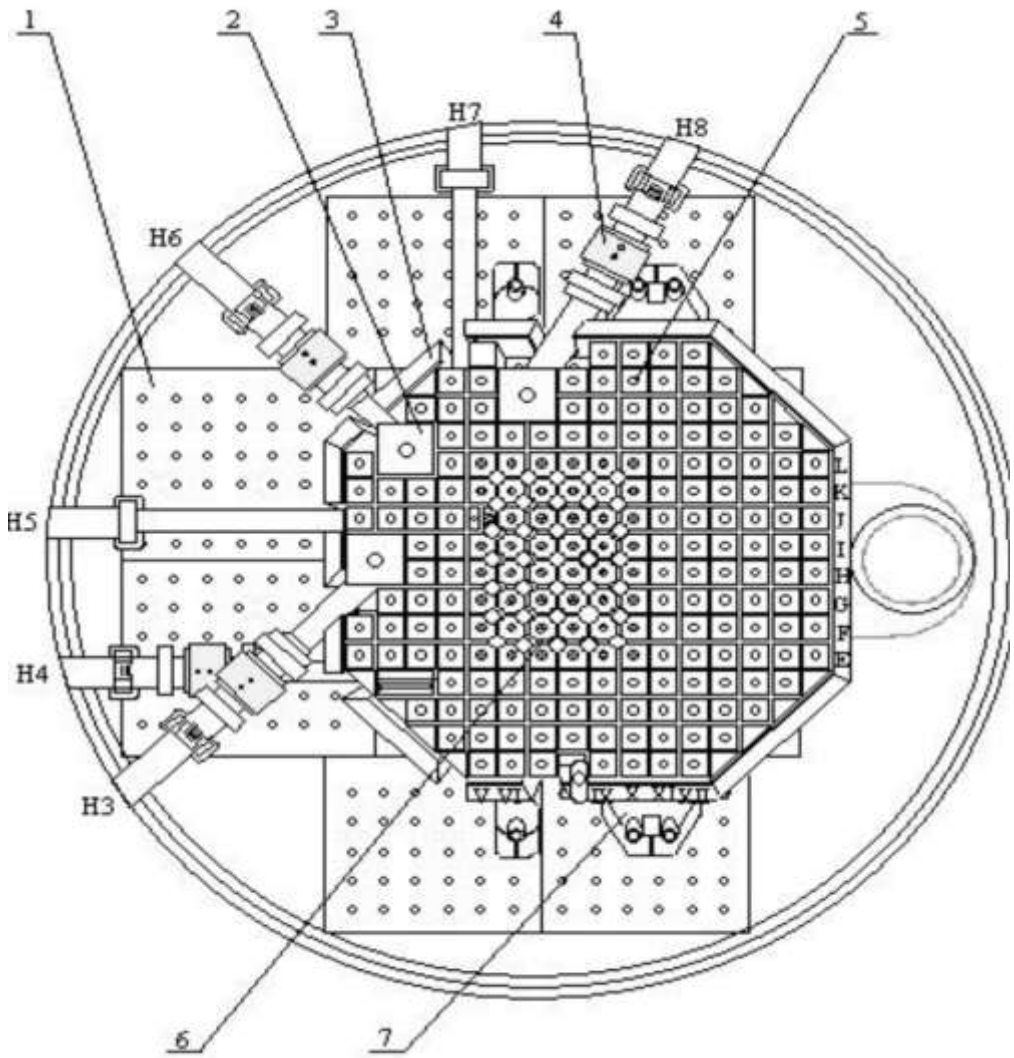

Figure 5. MARIA reactor core - top view [10]

1 – Table; 2 – Multiple graphite block; 3 – Reflector housing; 4 – Horizontal channel compensation; 5 – Graphite block; 6 – Beryllium block; 7- Ionization chamber shielding, H3÷H8 – horizontal channels

1.3. Design basis of MARIA research reactor

The project of MARIA research reactor is established on the preliminary design basis based on the MR reactor. The commissioning design basis of MARIA reactor was established in Safety Analysis Report for MARIA reactor (SAR) [10] and then updated taking into account all start-up and full power operation experiences.

Although the design basis itself is sparing in details, the additional safety measures are taken into account throughout consecutive chapters of SAR. It is necessary to mention that despite the design requirements and assumptions set in design basis are less strict than for nuclear power plants and the overall approach was in accordance with international good practices [12]. The main requirements imposed in Chapter Design basis in SAR for MARIA research reactor are:

- Controlled leak tightness of reactor building;
- Minimal vacuum pressure during normal operation and maximal overpressure during design basis accidents of reactor building;
- The permissible surface contamination of fuel elements;
- The dispersion of radioisotopes to environment for normal operation, anticipated operational occurrences (AOO) and design basis accidents (DBA) are lower than the operational limits and conditions (OLCs);
- Reactivity compensations of safety rods and control rods separately, during all modes of normal operation, AOO and DBA, are higher than reactor core reactivity capacity;
- Heat generation within the fuel element is limited and the value of relevant coolant flow value is assigned.

1.4. Methodology - introduction

Ageing is defined as a general process of continues changes in characteristics of SSCs due to the operational and environmental factors such as stress, temperature, pressure, chemistry regime, radiation, humidity, service wear, etc. The changes may lead to degradation of materials and devices resulting in the reduction of the safety margins provided in the design of SSCs. The failure to timely detect the ageing effects may compromise reactor safety by reduction or loss of the ability of SSCs to function when called upon.

According to the IAEA [13], safety of research reactor requires provisions for effective ageing management throughout the lifetime of the reactor. Although the activities within the scope of ageing management are similar to other activities carried out in maintenance, it is important to deploy the proper methodology to understand the ageing degradation and therefore to provide its proper management. The process of maintenance itself does not

include the provisions for recognition of ageing degradation as a consequence of the service and environmental conditions and does not include the countermeasures for the prevention and mitigation of revealed ageing processes.

The ageing affects the reliability of the reactor SSCs important to safety and affects compliance with the OLCs. The proper ageing management programme that includes monitoring; prediction; and timely detection; and mitigation of degradation is required to ensure the fulfilment of safety functions performed by the SSCs in all operational states of the reactor, including the design basis accidents. When called upon, the fulfilment of three main safety functions for research reactors is crucial to ensure the nuclear safety of the facility. The mentioned requirement is imposed in the IAEA SSR-3. SSR-3 Requirement 7 (part omitted) states: "*The design for a research reactor facility shall ensure: (…) (i) the control of reactivity; (ii) removal of heat from the reactor and from the fuel storage; (iii) and confinement of the radioactive material, shielding against radiation and control of planned radioactive releases, as well as limitation of accidental radioactive releases.*" The fulfilment of the requirement pursues the fundamental safety objectives set in the IAEA Fundamental Safety Principles [14].

1.5. Methodology of developing the ageing management programme for MARIA research reactor

The lack of national ageing management specific guidelines imposed screening of international practices on the topic. The approach consists, inter alia, of screening of relevant international safety standards and taking part in Technical Meeting on Research Reactor Ageing Management, Refurbishment and Modernization [15] and 1st Topical Peer Review Workshop on Ageing Management.

The most consistent approach for research reactors and other facilities is presented in either IAEA guidelines [13] or NRC guidelines for domestic licensing of production and utilization facilities [16]. Both methodologies do provide the recommendations or requirements on managing ageing of research reactors. The IAEA and NRC guidelines for ageing management of SSCs important to safety are based on the national and international best practices, e.g. both, IAEA and NRC guidelines, provides the input data for operating organization in the form of generic ageing lessons learned reports [17][18]. Although the data presented in those publications is mostly derived from lessons learned or research programmes for nuclear power plants, it might be valid for research reactors.

The past good experiences of National Centre for Nuclear Research (NCBJ) in using the IAEA guidelines was a crucial factor in decision to use SSG-10 as a basis to fulfil the condition set by President of PAA in the new Licence. Although the SSG-10 is a primary document used for the development of ageing management programme for MARIA reactor, the approaches presented in IAEA guidelines for ageing management for nuclear power plants [19] and data contained in NRC publications, where applicable, are used.

SSG-10

The IAEA safety standard guide SSG-10 provides the methodology that covers all aspects relating to development, implementation and periodic improvement of ageing management programmes in research reactors. The standard covers physical ageing of both active and passive SSCs and aspects of obsolescence (non-physical ageing). The safety guide is divided into several sections and two annexes in which the ageing mechanisms, their effects and example of screening of SSCs for ageing management are stated. The SSG-10 consists of:

- Basic concepts and definitions;
- Management system;
- Considerations on ageing management;
- The structure of ageing management programme;
- Obsolescence;
- Technical aspects related to ageing management.

2. General approach

The quality assurance on a preparation of an effective ageing management for SSCs of MARIA research reactor is guaranteed by following methodology presented in SSG-10. The first step of developing ageing management system was preparation of the document imposing the general requirements for the effective ageing management programme.

The ageing management programme (AMP) [20] was elaborated to address the issues of effective ageing management. The AMP is a system procedure providing the requirements on screening of SSCs important to safety, identification of ageing mechanisms and their effects, including both physical ageing and obsolescence and impose the requirements for lower-order procedures of the programme.

The AMP methodology is based on the PDCA approach (Plan, Do, Check, Act) presented in IAEA guidelines for nuclear power plants [19]. The PDCA approach consists of following activities: Plan, Do, Check, Act and the understanding ageing of SSCs. The approach is summarised in the Fig. 6.

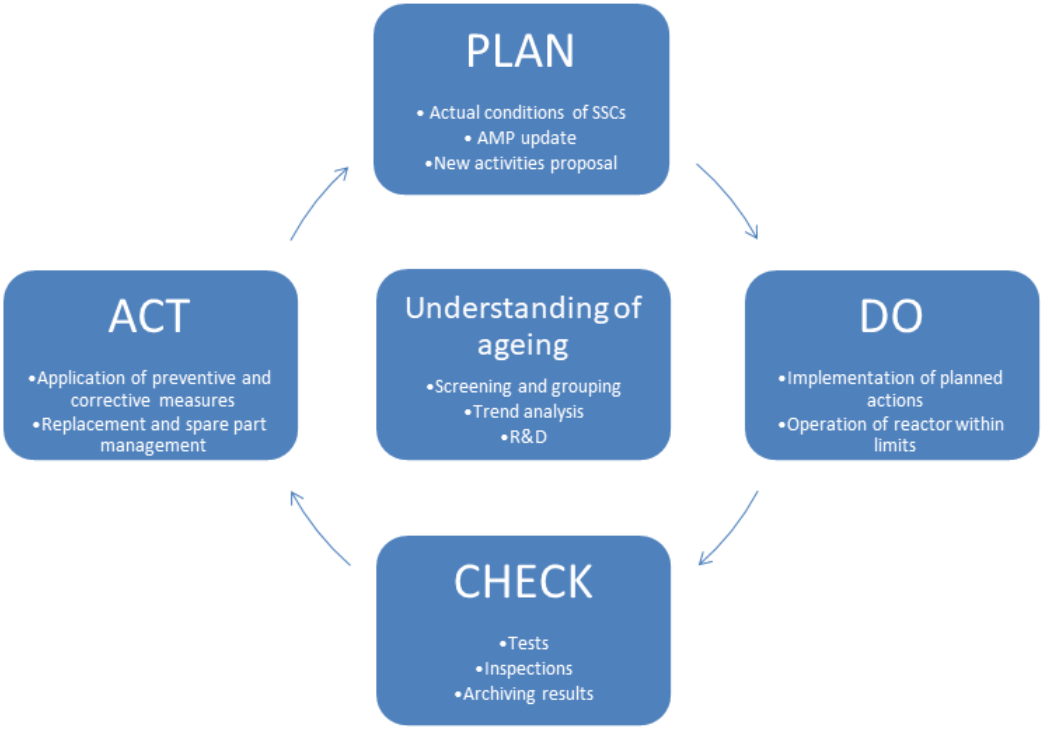

Figure 6. PDCA approach diagram

The Plan activities focus on the periodic assessment of condition of SSCs important to safety; the update of AMP based on current internal and external experiences; and recommendation and planning for further activities within the scope of AMP.

The Do activities focus on implementation of planned actions; operation of the reactor within the limits set by regulatory body and AMP; control of the environmental and set parameters.

The Check activities focus on performing functional tests, inspections of SSCs important to safety; and archiving the results of these activities.

The Act activities focus on application of preventive and corrective actions; as well as replacement of worn components; and spare parts management.

The understanding of ageing of SSCs focus on screening and grouping of SSCs; data archiving; trend analysing; and performing the R&D activities.

The implementation of IAEA guidelines for ageing management system assures the proper quality of the AMP. The management programme consists of several chapters providing details on the methodology proposed in SSG-10. The Agency document focuses in its primary steps on the following aspects of the management system for ageing control:

- Management responsibility;
- Resource management;
- Process implementation;
- Measurement and assessment of effectiveness of process.

The management system used in AMP addresses the mentioned above specific requirements in separate chapters.

2.1. Management responsibility

According to the IAEA, the ageing management requires implemented management system within the operating organization. The system should provide the descriptions of the organizational structure, functional responsibilities as well as levels of authority for management of ageing. Such approach assures the required quality during the elaboration of the ageing management programme, its procedures and activities.

The integrated management system (ZSZ) [22] governs all activities and processes in NCBJ by setting the requirements on elaboration of procedures and the update of those based on

assessing the adequacy of those processes. The description of the organization structure of NCBJ, the functional responsibilities of the departments and the levels of authorities are set for the Institute.

The lower-order procedure is the Quality assurance procedure for MARIA reactor [21]. Its scope is focused on the good quality on the processes of: operation, maintenance and modernization of reactor MARIA. PZJ covers also descriptions of the organizational structure, responsibilities and roles within the Nuclear Facilities Department (DEJ), functional responsibilities of the sections and levels of authority are included within the PZJ.

The analysis of both: ZSZ and PZJ is performed with the relevant activities within PSR scope and the corrective actions will be applied to fulfil the international requirements. Despite the review, the basic requirements on elaboration of the AMP were set according to the two self-complementary management systems elaborated in NCBJ: PZJ and ZSZ.

Documentation

The ZSZ and PZJ set the requirements on the subsequent procedures. The hierarchy of documentation for MARIA reactor is shown below.

- Core level procedure – Integrated Management System for NCBJ;
- I level – PZJ and all nuclear safety related documents, such as: SAR, SAR Annexes, basic document for Periodic Safety Review (PSR), PSR report;
- II level – procedures involving:
    - Assurance of design, manufacturing, repair and modernization of SSCs;
    - System procedures, including the AMP;
- III level – operation procedures and guidelines, including the SSCs specific ageing management programmes, the tests forms, monitored parameters forms.

The quality is assured by implementing into lower-order procedures requirements from higher-order documents. Therefore, the management system for ageing management programme was elaborated to cope with the requirements and guidelines set in the ZSZ and PZJ. The 03-ZR procedure, called AMP, sets the specific requirements on its sub procedures, the III level quality documents. Presented form of documentation easily shows the levels of authorities and division of responsibilities.

Archiving

The corresponding section heads or people designated by them are responsible for

archiving the results of the activities within the scope of AMP. The post-inspection protocols, monitoring records, etc. are kept in the both, paper and electronic form. It is required for the paper form to hold the signatures of the section head and the reactor manager and those are stored in each section room. The scans of these are additionally kept in case of the any accident. Independently from section heads, Chief of AMP is responsible for keeping the hard and soft copies of these records.

Additionally, in accordance with the requirements imposed by the PZJ, all malfunctions of the SSCs important to safety shall be confirmed in the protocol and kept in the control room. Registry of the malfunction protocols is the responsibility of the Head of Operators Section.

The Network Attached Storage located outside the reactor building is provided to ensure the periodic back-up.

2.2. Resource management

The IAEA recommends ensuring the adequate resource management, including management of the human and financial resources. The resource management may differ with the size of the reactor and needed activities.

Provisions for the human management is included within the AMP, it does precise the responsibilities within the scope of ageing management. The roles in AMP are divided to three levels: the Reactor Manager, the Chief of AMP and the Chiefs of the Sections of The MARIA Reactor Operation Division (EJ2).

Reactor manager

According to the NCBJ statute, Reactor Manager is also the head of the EJ2 Division and he holds the primary responsibility for ensuring nuclear safety and security at reactor. Therefore the responsibility for elaboration, implementation, resource management and overall scope of the ageing management is designated to the Reactor Manager.

Reactor Manager is responsible for: designation of the Chief of AMP; supervision of internal and external personnel who perform ageing management activities; and empanel the Committee periodically assessing the actual condition of SSCs important to safety. Reactor Manager approves the AMP schedules and sets the requirement on updating the procedures within the AMP scope.

Chief of AMP

The Chief of AMP is responsible for direct supervision on AMP, its direct elaboration and implementation and status control. The Chief, in cooperation with Chiefs of the Sections of EJ2 Division, does elaborate the AMP schedule and performs the analysis of trends of data acquired from procedures within the AMP scope.

The Chiefs of the Sections of EJ2 Division are responsible for the performing the activities within the AMP scope and reporting to the Reactor Manager and the Chief of AMP. The organizational chart of DEJ is shown in Fig. 7. Red contour marked sections are involved in AMP activities.

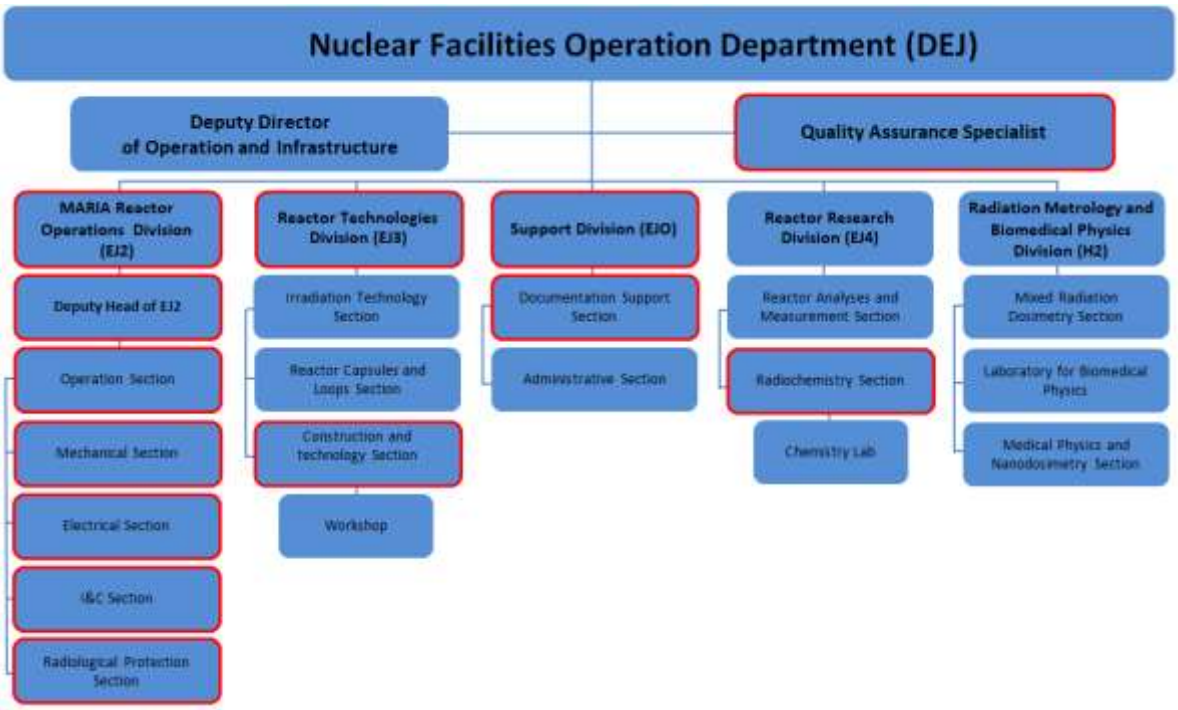

Figure 7. Organizational chart of DEJ. The sections taking part in AMP are marked using red contour.

2.3. Process implementation

The process implementation requires the number of measures for its proper employment in nuclear facility, inter alia it is:

- A nomination of the person who has the responsibility for implementing the AMP. The Chief of AMP is designated in accordance with AMP;

- Monitoring of changes in SSCs and implementation of proper actions in their blue prints and analysis of ageing mechanisms;
- Specification of scope and frequency of tests and in-service-inspection;
- Specification of requirements on AMP lower-order procedures;
- Assurance of equipment calibration.

In order to maintain adequate transparency and consistent approach, the above mentioned measures were considered and specified in proper part of PDCA of AMP.

2.4. Measurement and assessment of effectiveness of process

The number of measures has to be considered and implemented in AMP to measure and asses the effectiveness of the programme. Following measures were implemented in AMP:

- The periodic review of the procedures within the scope of AMP;
- The periodic assessment of actual conditions of SSCs important to safety;
- The periodic safety reviews.

3. Screening and selection of systems, structures and components

According to the IAEA [13], the large number of SSCs in nuclear facilities does not allow evaluating and quantifying the ageing processes for each particular SSC. The operating organization should provide the systematic approach in determining the SSCs important to safety which are also susceptible to ageing degradation. The SSCs fulfilling the guidelines presented above shall be included in ageing management programme.

The second step is division of the selected SSCs into groups basing on, inter alia, similar design, environmental and work parameters. The processes provide the operating organization with information necessary to establish the ageing management specific programmes for the groups rather than for particular SSCs. The group related programmes contain details on understanding and management of ageing of SSCs and are used for particular SSCs.

The following chapters provide the background for screening and grouping of SSCs within the scope of AMP in MARIA reactor.

3.1. Screening of SSCs

The screening of SSCs is divided into three steps: selection of SSCs important to safety; selection of those SSCs important to safety which might be susceptible to ageing degradation; the determination of easiness of replacement of SSCs. The methodology for each of them is presented below.

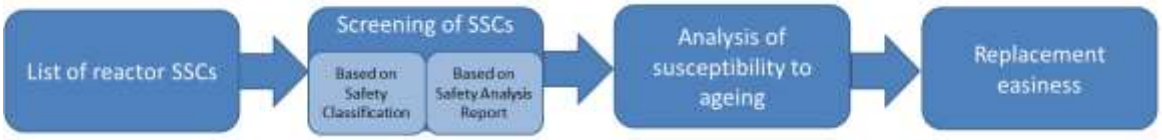

Figure 8 The screening process of SSCs established in AMP

3.1.1. IAEA approach

The IAEA issued the Requirement 16: Safety classification of structures, systems and components within SSR-3 document which states that: "*All items important to safety for a research reactor facility shall be identified and shall be classified on the basis of their*

safety function and their safety significance.". The condition applies to all research reactors under design, construction, start-up, operation and decommissioning. To assure the compliance of national law with IAEA guidelines, the Atomic Law [6] impose the requirement on elaboration of the document containing the safety classification of SSCs important to safety in nuclear facility. The purpose of the requirement is application of quality criteria for a design, maintenance and surveillance relevant to level of safety that may be breached by the failure of the corresponding SSCs.

However, the most obvious methodology for the selection of SSCs within the scope of AMP lies in using the safety classification of MARIA reactor, the alternate approach is also incorporated in AMP. Therefore, two methodologies of selection of SSCs important to safety are presented below.

3.1.2. Current status of Safety classification of SSCs important to safety

The screening of SSCs important to safety for ageing management is acquired by reviewing the safety functions specified in the safety classification of SSCs. The SSCs with at least one of the safety functions fulfilling one of the fundamental safety functions assigned are selected to the further analysis.

The recommended way to perform the selection is based on method described above. However, the Safety classification of Systems, Structures and Components for MARIA reactor [23] has not yet been approved by the regulatory body.

Although the high level functions have been identified and preliminarily assigned to the SSCs, no detailed functions were approved during the discussion with the representatives of the regulatory body. The level of detail, criteria for the assignation of the classes to the SSCs and the overall methodology is currently under bilateral negotiations.

The changes in methodology proposed by NCBJ required alternative approach to complete the project. The proposed changes were placed to use a graded approach to the classification process. One of the elements of the proposal was to allow using the identified functions in the different plant states. The proposed change will result in a limitation of the number of safety functions and is aimed to reduce an effort to perform the analysis of the consequences of failure to perform the function. At the same time the analysis will include all necessary safety functions to fulfil all fundamental safety functions in all reactor states. By contrast the increased number of safety functions was the cause of misunderstanding and resulted in errors in the analysis.

Therefore, the second screening methodology was elaborated to fulfil the IAEA requirements without approved safety classification for the MARIA reactor. Once the document was approved, the scope of AMP will be reviewed.

3.1.3. Selection of SSCs basing on SAR

The SAR of the MARIA reactor contains a number of information providing detail on safety functions of SSCs. The MARIA SAR consists of 19 chapters:

- Chapters 1-3 provide details on the general description, safety objectives as well as the site characteristics;
- Chapters 4-10 provide details on the technological systems of the reactor, including buildings, shielding, reactor core, core cooling system, reactor protection system, control and monitoring systems, energy supply systems and auxiliary systems;
- Chapters 11-15 give insights on the reactor utilization, experimental devices as well as the radiological protection, waste management and quality assurance programme;
- Chapters 16 contains descriptions of all deterministic and probabilistic safety analysis performed for MARIA research reactor. The effects of anticipated occurrences events and postulated component failures including the failure modes, its consequences and the ability of the reactor to address those events;
- Chapter 17 describes the safety limits, safety system settings and limiting conditions for safe operation, surveillance and administrative requirements. Additionally, Chapter 17 specifies the requirements on availability of the reactor equipment. The conditions incorporated by the regulatory body in Licence are based on this chapter;
- Chapters 18 and 19 provide details on the preliminarily decommissioning plan and the emergency preparedness.

Analysis and limits contained in Chapter 16 and 17 stem from the information provided in previous chapters and therefore those chapters of the SAR were chosen as a basis for the screening of the SSCs for AMP scope.

The screening of SSCs important to safety for ageing management is acquired by analysing the Chapters 16 and 17 of SAR of MARIA reactor. The analysis of the Chapter 16 of the SAR for identification of the SSCs within the scope of the AMP is based on the function performed by the SSCs in the every postulated initiating event. Any SSCs that is required to

reach a particular state of the reactor – controlled or safe state – after an anticipated operational occurrence or a design basis accident is added to scope of the AMP.

As the Chapter 17 sums up the SSCs required for the operation of the MARIA reactor. The Licence forbids start-up, operation on the full power and the operation on the minimum power without required number of systems. The equipment required for operation, stated in the Chapter 17 is also included within the scope of AMP.

3.1.4. Exclusions from the scope

In accordance with IAEA guidelines, selected SSCs are than analysed in a step by step study on the process and environmental conditions and their corresponding ageing mechanisms. If no ageing mechanisms is found or ageing deteriorations have no potential to cause the failure to the equipment, the SSC is excluded from the scope of the AMP.

Additional factors that are considered in selection are:

- the easiness of the replacement of SSCs and;
- the frequency of the replacement of SSCs.

The periodic replacement of the SSCs that base on the conservative analysis can be a reason to remove particular SSC from the scope of AMP. The good example of exclusion from the scope of the AMP due to the frequency of the replacements of SSCs is the use of disposable, aluminium fuel channels. This example is discussed in more detail in the chapter **5.1 Ageing management matrix**.

3.2. Grouping of SSCs

Justification of grouping of SSCs

The ageing degradation processes of the SSCs of similar design that operate in similar working and environmental conditions process are similar or transpire in the same way. Basing on the above, the focus on the ageing management activities should not be placed in particular components than rather on groups of these components. It allows the operating organization to clearly identify the goals for each group and is resource effective. It allows reduction of the number of specific ageing management programmes and focus on the comparative approach. The aim of the grouping is providing the operating organization information on different SSCs that require similar actions within the programme. The information is then used to elaborate specific ageing management programmes.

The para 5.8 of SSG-10 sets the requirement on the grouping of the SSCs. The grouping of similar components is accurate only if the service conditions of these are comparable. In general, MARIA reactor parameters, both during normal operation and anticipated operational occurrences are classified as mild conditions in opposite to conditions occurring in different systems of nuclear power plants. MARIA research reactor parameters differ from nuclear power plants parameters in many aspects, including, inter alia, operating pressure, temperature, chemistry regime and the dose rates to particular equipment.

Table 3. Comparison of parameters of MARIA research reactor and Westinghouse AP1000 reactor [10][24]

	MARIA research reactor	**Westinghouse AP1000**
Nominal power output [MW_{th}]	30	3400
Coolant inlet/outlet temperature [°C]	40/90	280/321
Reactor operating pressure [MPa]	1.75	15.5
Primary coolant flow rate [m^3/s]	0.11	20
Operating cycle length [weeks]	1	~80
Soluble neutron absorber	None	Boric acid
Rated flow rate in reactor coolant pumps (residual heat removal pumps) [m^3/s]	0.055 (0.01*)	~5

* - Although the standard flow rate of two residual heat removal pumps is 100 dm^3/h, the flow rate of one pump (55 dm^3/h) is sufficient to safely remove the residual heat during AOO and DBA

Additionally, since operating cycle lengths in MARIA reactor are shorter it enables more frequent visual inspections of safety systems and safety related SSCs and the main factor that allows grading of activities in the scope of the AMP is the length of the cycle. Such differences allow to use a graded approach and to limit the number of groups in ageing management programme. The exemplary differences in the operating parameters

of Westinghouse AP-1000 Nuclear Power Plant and MARIA research reactor are described in Table 3.

No harsh environmental conditions are expected during normal operation, AOO and DBA. Such comparison, including the properties of the materials used in MARIA's SSCs, allows to dismiss some types of degradation mechanisms, inter alia: water treeing of cables, thermal embrittlement and two-phase erosion of pipelines and heat exchangers, crevice, pitting, intergranular or transgranular steel corrosion cracking corrosion of pool liner of reactor pool.

Regarding the above stated information, it is important to gather information of SSCs material properties, operating and environmental conditions and deeply analyse these data. The related industry publications are good source of knowledge.

Methodology of grouping

The results analysis of the environmental and process conditions, including reduced differentiation of these parameters between the systems in the MARIA research reactor were the base to decide not to create further sub-groups of SSCs. Instead, the frequency and/or the scope of the tests of SSCs are individually adjusted in the AMP table. The broader scope or more frequent activities depend on the importance of the SSCs (for example higher frequency of ultrasound weld tests on fuel channels cooling system) and unique environmental and process parameters, i.e. higher frequency of tests of cables located in high humidity areas.

The Table 4 is representing the generic groups of SSCs identified for MARIA reactor and incorporated into AMP.

Table 4. Proposed groups of the SSCs in MARIA reactor AMP

• **Fuel channels;**	• **Piping;**
• **Pumps;**	• **Valves;**
• **Core related elements;**	• **Emergency power supply;**
• **Electrical cables and switching stations;**	• **Reactor protection system;**
• **Safety information and control system;**	• **Neutron instrumentation and control system;**
• **Buildings;**	• **Ventilation system;**
• **Others.**	

4. Identification of ageing mechanisms

According to the IAEA [13], the gradual changes in the characteristics of SSCs with time or use can be divided into two kinds of time dependent changes:

- Physical ageing, e.g. changes in physical characteristics;
- Obsolescence, e.g. changes in current knowledge, standards, regulations and technology.

The physical degradation may result in loss of the reliability of the SSCs to perform their intended function and therefor reduce the safety margins of the reactor.

On the other hand, the changes in technology, standards and regulations may lead to lack of spare parts, additional failure modes or nonconformity with current legislation basis. Additionally, the continuous changes are applied in research reactors that result from the new the experimental or production modes (such as NAA, molybdenum production, cold neutron research facilities, etc.). The operating personnel shall have the up-to-date documentation of the changes in SSCs and operational documents. The lack of current knowledge of the operational SSCs and their documentation or the continuous updates of the documentation may lead to decrease of nuclear safety and increased number of incidents related to human factor.

In Ageing Management Programme for MARIA research reactor the physical ageing and obsolescence are divided and dealt separately.

4.1. Obsolescence

The following obsolescence factors are considered in AMP for the MARIA reactor:

Changes in technology

The fast pacing environment of technology is a great advantage in enhancing safety of the nuclear facilities. However, the advances in technology result in the lack of technical support for the operating organization as well as the lack of the spare parts. The rate of the changes in technology depends on the type of the industry. The fastest and the most crucial changes occur in I&C business. The obsolescence of applied technology creates the need to establish a proper control the market of the spare parts as well as requires a good knowledge transfer in operating organization.

Changes in nuclear safety requirements

Changes in legislation, standards and good practices are occurring periodically and on the one time basis. One must notice that during the construction of MARIA reactor no effective Atomic Law was in place. The first drafts of Atomic Law were prepared following the government decision to establish nuclear power plant programme in early ’80s. The review of the current state of knowledge that follows both, the lessons learned from research studies as well as the accidents such as Three Mile Island, Chernobyl and Fukushima often implicates the new nuclear safety requirements. Therefore, it is important for the operating organization to establish a monitoring of changes in nuclear safety requirements, including standards and good practices.

The changes in the requirements that apply to the reactor MARIA are a good example of such obsolescence. Reactor MARIA was commissioned in 1974 after project fulfilling the requirements stated by the Safety Committee of IBJ (Nuclear Research Institute - predecessor of NCBJ). On the other hand, the National Atomic Energy Agency which supervises the activities with the ionizing radiation is used was established in 1982 and the first Atomic Law was introduced in 1986 for the purposes of the planned first polish nuclear power plant. The changes of requirements are consequently applied throughout the years to comply with international good practices, requirements from IAEA and the European Union.

Changes in documentation

The utilization modes of nuclear power plants and research reactor differs greatly. The new experiment needs, production modes have a huge influence on imposing the changes in the research reactor and its documentation. The experiments and productions adjustments results in modifications of operational procedures as well as SAR and SSCs documentation. Therefore, the changes in documentations shall be evaluated and corrected.

Inadequacies in design

The fast changes in technology does not always allow a proper analyses of its design details. The inadequacies in design (i.e. use of novel materials) may lead to accelerated degradation of SSCs important to safety, as well as hamper the in-service-inspection. The improper design basis for SSCs may than require broader scope or more frequent inspections of SSCs than earlier predicted. The follow-up studies reveal the mistakes and bugs in the design, manufacturing and coping of SSCs. The good design quality is assured by elaboration of set of requirements on the design, purchases and processes as well as imposing the requirement on following the current state of the art.

Improper maintenance and operation

The huge amount of root causes of the accidents is connected to improper maintenance or operation. The way the maintenance and repairs are conducted has a big influence on SSCs and their process and environmental parameters. Improper control of SSCs parameters or nonconformity to the procedures may lead to accelerated degradation of SSCs. The internal audits and the record keeping of the environmental and process parameters are required to ensure the continuous improvement of the programme.

Incomprehension of ageing mechanisms

The incomprehension of ageing mechanisms may lead to undetected ageing deterioration or accelerated degradation due to improper maintenance, operation, design or fabrication. It is important to continuously review the AMP and gain operating experience internally and externally.

4.2. Physical ageing

The methodology of analysing of each particular SSC separately was used in elaboration of the AMP. As a basis, the following physical conditions, mechanisms and effects of ageing were used. The result of such analysis was establishment of the ageing matrix of SSCs – the matrixes are described in Chapter 5.1 of this report.

Ionizing radiation

The irradiation robustness of the materials used in SSCs of MARIA reactor differs with the purposes and location of the component. In principle, the vast majority of SSCs is located in the mild environmental conditions regarding the ionizing radiation dose rate and there is no accelerated ageing assigned. The exceptions to above stated rule consists of beryllium and graphite blocks; fuel channels; safety and control rods and its channels; horizontal channels as well as structural materials of the core and its supports (for instance core support plate and reflector support basket)

The identified ageing mechanisms and failure causes related to ionizing radiations are:

- Change of nuclear properties of the material (i.e. absorption of neutrons);
- Hydrolysis of water and corrosion attack;
- Adverse doping of metals leading to change of strength, ductility and swelling;
- Transmutation and fission gases build-up (isotopes of helium and hydrogen) leading

to change of material properties, for instance ballooning and increase of brittleness;

- Dislocations and creation of voids in crystal lattice by means of neutron irradiations (knock-on atom) leading to displacement, growth and distortion, in example, the Winger effect (dislocation of atoms in a solid caused by neutron radiation) in graphite shall also be considered;
- Oxidation of the jacket and the insulation of the cables influenced by dose rate;
- Direct and indirect dehydration of concrete;
- Acceleration of corrosion rate by the means of hydrolysis and neutron activation of the water containing different additives;
- Decreased calibration stability and accuracy and response time of I&C components;
- Gamma heating of structures (i.e. concrete structures - fig. 9).

Pressure

According to the IAEA Technical Document (IAEA-TECDOC), the operating pressures in research reactors are much lower than in nuclear power plants. Similarly, the stresses imposed by these pressures are lower and may be omitted. However, it is important to take into account all experimental devices operated at high temperatures and pressures.

Vibrations

The identified ageing mechanisms and failure causes related to vibrations are: cracking; erosion; hardening; connection slacking and increase of temperature due to Joule effect; decreased calibration stability and accuracy and response time of I&C components.

Temperature

Both temperatures, environmental and process, in MARIA reactor are lower than in the case of nuclear power plants. The key ageing mechanisms and failure causes related to temperature effects are:

- Increase of chemical reaction rate (for instance corrosion rate);
- Curing of polymers (for instance dehydrochlorination) resulting in hardening or a loss in tensile strength of cables;
- Degradation of concrete due to dehydration and frost penetration (fig. 9);
- Degradation of bearings and their lubricants.

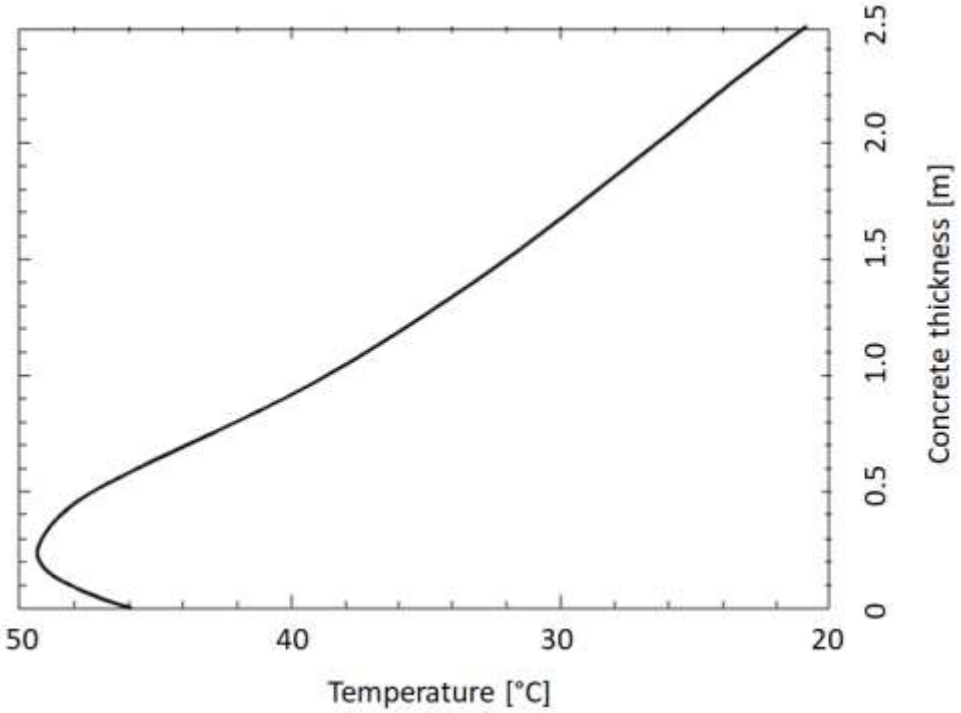

Figure 9 Concrete temperature predictions based on the gamma heating as a function of the distance from the reactor pool [10]

Liquid and solid interactions

There are two types of fluid and solid interactions: static and dynamic.

The static interactions derived ageing mechanisms include inter alia: increase of chemical reaction rate (for instance corrosion rate or creation of galvanic cells); loss in tensile strength and elastic of polymers; water condensation leading to treeing phenomena in electrical cables and short circuits in I&C cables.

The dynamic interactions derived ageing mechanisms include inter alia: furring of heat exchangers, flow and cavitation induced erosion; decreased calibration stability and accuracy and response time of I&C components.

The additional factor is the air flow derived ageing mechanisms are similar to liquid and solid interactions. The identified ageing mechanisms and failure causes are: increase of chemical reaction rate (corrosion rate); flow induced erosion as well as fouling.

5. Elements of ageing management programmes proposed in MARIA AMP

The elaboration of the Ageing Management Programme for MARIA reactor was divided into several elemental parts to achieve the proper quality of the and the overall goal of the project. First step was the screening of international standards, good practices on ageing management programme development as described in Chapter 1 of this report. The following steps consisted of elaborating a set of requirements of management system to cope with screened standards and ensure the consistency of the programme. The requirements, inter alia written in Chapter 2 and Chapter 3, induced next steps which implemented the screening, grouping and identification of ageing mechanisms and assignment of these to particular SSCs. The final step is establishment of procedures within the scope of AMP to cover degradation; monitoring and trending; mitigation and corrective actions for the identified groups.

5.1. Ageing management matrix

The implementation of screening, grouping and assignment of ageing mechanisms was performed in the form of the AMP matrix. The matrix sums up all relevant information about SSCs and their susceptibility to ageing mechanisms in compact form to easily provide a general data for maintenance personnel of MARIA reactor. The methodology was elaborated in IAEA IGALL database in the form of generic samples of ageing management review tables, and proven ageing management programmes.

The AMP matrix containing the following parameters:

The designation of the SSCs

The AMP matrix gives information on the name, the number (derived from newest, yet unapproved, version of the Safety Classification of System Structures and Components of MARIA Research Reactor [23]) and the unique process tag identifier, in example:

Table 5. Number, name and unique process tag identifier as implemented in AMP

1.5 Fuel channels residual heat removal pumps 1u2/1, 1u2/2, 1u2/3 and 1u2/4.
1.11 Fuel channels discharge line 1 Rt

2.1 Assembly of the filters, incl.:
2.1a. Mechanical filter 4u2, 4u6
2.1b. Ion exchange filter (cation bed) 4u3, 4u7
2.1c. Ion exchange filter (mixed bed) 4u4, 4u8
2.1d. Mechanical filter 4u5, 4u9

The group

In the accordance with Chapter 3.2., for all SSCs that were chosen within AMP scope the group is assigned. The assigned group easily identifies the specific ageing management programme for the component.

Table 6. Example of groups in AMP

Group: Pumps
Group: Valves

The environmental and process conditions of SSCs

The summary of the environmental and process conditions of the SSCs in the AMP matrix gives an input data for the next column and provides a conveniently way to verify the assumptions of specific ageing management programme assigned.

Table 7. Example of environmental and process conditions in AMP

Conditions: high neutron radiation, high gamma radiation elevated temperature, fluid and solid interactions, vibrations, humidity.

The ageing mechanisms

The AMP matrix presents a summary of the identified ageing mechanisms basing on the environmental and process conditions of SSCs. The ageing mechanisms are than referred in specific ageing management programmes

Table 8. Example of ageing mechanisms

Ageing mechanisms: Corrosion, flow and cavitation induced erosion, changes of surface and volumetric physical parameters

The replacement easiness

The easiness of the replacement gives an operating organization a possibility to timely detect and mitigate the ageing effects. The replacement of the SSCs or its part leads to increase of safety margin.

The good example of mitigation of ageing by replacement is the use of disposable gaskets and inclusion of the analysis of the properties of the torn gaskets within the scope of the procedure. Another example of disposable elements in MARIA reactor were fuel and experimental channels.

Until 2017 NCBJ was obliged to use disposable aluminium pressure channels with the limited time of irradiation. The nominal power of the fuel element in the channel in the centre of the core amounts up to maximum 1.64 MW. The limit on the burnup of the fuel, converted into the energy produced, was also the limit for the pressure channel - 5880 MWh (~60% of burnup). The limit was approved by regulatory body in the Licence for the use of aluminium alloy channels [25]. Such conservative limit allowed excluding the aluminium channels from the scope of ageing management. Since 2017 NCBJ has been given a permission to use reusable zirconium alloy pressure channels. Basing on the neutron irradiation calculations than converted into the energy produced by the fuel element increased the limited time of irradiation up to 20 GWh per channel and allowed multiple-use. Since the limit was boosted, no exception from the scope of AMP could be granted for new channels and the ageing management procedure had to be developed. A R&D project, which include non-destructive examination (NDE) of fuel channels, was established in MARIA reactor. The project is developed with the accredited Materials Research Lab (LBM) of NCBJ. LBM is obliged to perform the visual inspection with accredited procedure. Additionally, the leak tightness test of the used channels is performed before reuse.

On the contrary, the reactor pool replacement or repair is nearly impossible and therefore the MARIA reactor staff decided to start another internal R&D programme in order to prepare a proper procedure for inspection of the steel liner of the MARIA reactor and spent fuel pool. The construction of the MARIA reactor was intended to gather the experiences for construction of the Żarnowiec nuclear power plant. The numbers of documents have been prepared shortly after commissioning of MARIA reactor that collects information, know-how,

and good as well bad practices in nuclear build. It could also be a database for the knowledge gain that can be used to improvement of the AMP. In examples the preliminary literature studies performed by the NCBJ LBM have indicated contractor problems in welding of the reactor pool. As the integrity of the reactor pool is crucial parameter of the lifetime of the facility, the Materials Research Lab was asked to prepare a procedure to assess and control the ageing. A special jib is being designed with cooperation with DEJ.

The frequency of the activities

The frequency of the activities within the specific ageing management programmes was divided into three subgroups: inspections included within control rounds; inspections included within start-up rounds; and less frequent activities such as NDE etc. Such division clearly states the overall responsibilities of operation staff on both: daily and yearly basis and the shows the progress in activities. Figure 10 presents the extract of the table.

Group	SSCs	Environment	Degradation mechanisms	Easiness of replacement	Control frequency		
					Start-up	Control round	Other
Fuel channels	1.10 Fuel channels	• High neutron radiation • High gamma radiaiton • Elevated temperature • Fluid-solid interaction • Vibration	R&D Fuel channels	E	X	-	R&D Fuel channels
Pipelines	1.11 Fuel channels discharge line 1 Rt	• High gamma radiaiton • Elevated temperature • Fluid-solid interaction • Vibration	• Corrosion • Erosion • Surface and volumetric degradation	M	X	-	• UT: 1/3 years
	1.12 Fuel channels suction line 1 Rs	• High gamma radiaiton • Elevated temperature • Fluid-solid interaction • Vibration	• Corrosion • Erosion • Surface and volumetric degradation	M	X	-	• UT: 1/3 years
Electrical cables	Group 1 - measurements cables in harsh environment (gamma or neutron radiaiton)	• High neutron radiation • High gamma radiation • Humidity	• Mechanical properties changes of insulator and conductor • Electrical properties changes of insulator and conductor	M	X	-	• Measurements: 1/1 year
	Group 2 - power supply cables exposed to at least one type of harsh envrionment	• PZPS Cables and swichgear stations	• Mechanical properties changes of insulator and conductor • Electrical properties changes of insulator and conductor	E	X	-	• Measurements: 1/3 years
	Group 3 -power supply cables in mild environment	• Mild environment	• Mechanical properties changes of insulator and conductor • Electrical properties changes of insulator and conductor	E	X	-	• Measurements: 1/5 years

Figure 10. Ageing management matrix example

5.2. Ageing management programmes

The ageing affects the reliability of the reactor SSCs, reduces the safety limits and may have an influence on compliance with the OLCs. The operating organization shall establish mechanisms to fulfil, in any conditions and time, three fundamental safety functions. Therefore the methodology to deal with deterioration shall be elaborated by operating organization.

The Chapter 2 described the general requirement imposed on AMP to include, where necessary and practically applicable, the monitoring; prediction and timely detection; and mitigation of degradation. The elaboration of more specific requirements is necessary to assure that all required areas of ageing are covered in the particular or group of SSCs ageing management. These requirements specify the preconditions on particular ageing management programmes. The AMP establishes requirement that all sub-programs should include: title, scope and short description; preventive actions; parameters monitored; detection of ageing effects; monitoring and trending; acceptance criteria; corrective actions, internal and external experiences on the topic and the references of the programme. Depending on the programme, the preventive actions, monitoring and trending and internal and external experiences are not mandatory.

Basing on the methodology presented in IGALL [17], the requirements for each particular SSCs or group of SSCs ageing management programme were set. The following chapters describe in details above mentioned attributes of the programmes and give the examples of practical implementation of those in ageing management procedures.

5.2.1. Scope and description

First chapter of the each SSCs specific ageing management programme contains the short description of the programme and the scope of SSC's taken into account. The main purpose is to provide a brief outlook on the range of the programme taking into account all exceptions that programme excludes.

The example approach from the AMP [27]:

Beryllium and graphite blocks

The programme consists of recommendations and methods to evaluate the ageing mechanisms of beryllium and graphite blocks in MARIA reactor. The fuel channels, the control and the safety rods are excluded from the scope of the programme

5.2.2. Preventive actions

According to IAEA [13], an ageing management programme that bases only on the SSCs failure respond approach is ineffective. It should be based rather on a proactive approach, i.e. with foresight and anticipation. Therefore, the preventive actions shall be considered in each particular ageing management programme. The programmes should describe the identified and possible preventive actions together with a short justification or reference. The preventive actions that mitigate or decrease the rate of ageing deterioration should base on the reduction of the adverse environmental and process parameters.

Although it is not obligatory for the programmes to contain this section, relevant operating experience should be reviewed. The periodic safety reviews, peer review missions and other activities should encourage to review the possibilities to prevent the ageing deterioration of the SSCs. Preventive actions should be elaborated using international good practices, standards and guidelines as well as internal operating experience.

The example approaches from the AMP:

Batteries

The preventive actions (for batteries) focus on the battery maintenance, including periodic discharges and charges of the battery and systematic topped off of the battery electrolyte. The maintenance shall be carried in accordance with the appropriate instruction of battery conservation. [28]

Beryllium blocks

The increase of neutron fluency in beryllium does change both nuclear and mechanical properties of the material. The changes especially concern on the increase of the fast neutron fluency. This fact is crucial for beryllium blocks located in the centre of the MARIA core. Basing on the literature and external operating experience it was demonstrated that fast neutron fluence (i.e. neutrons with the energy higher than 0.8 MeV) in beryllium blocks that exceeds $5 \cdot 10^{22}$ n/cm^2 invokes changes in beryllium properties. Therefore, conservative limit ($2 \cdot 10^{22}$ n/cm^2) on fast neutron fluence in beryllium blocks was established in MARIA reactor [27].

The neutron fluency limits are specified both in OLCs and the Licence [8]. Economic optimization of usage of beryllium blocks as well as preventive actions were combined and recommendation to shuffle the blocks to reduce its cumulative fluence was elaborated.

5.2.3. Parameters monitored

The management of ageing is based on the ageing mechanisms that naturally occur. It is necessary to determine the most important parameters that shall be monitored in order to establish the prediction of ageing deterioration and the implementation of proper actions to slow down potential degradation. The list of the environmental and process parameters that are crucial for the ageing management of the SSCs is elaborated in the SSCs specific ageing management programme. It includes the visual, electrical, mechanical or nuclear properties of the scoped SSCs.

The example approaches from the AMP:

Beryllium and graphite blocks

The following parameters shall be monitored: diameter of the components of the safety and control rods, i.e. diameters of the beryllium block opening, diameters of the safety and control rod channel and diameter of the safety and control rod. Additionally, the drop time, speed of insertion, force to pull and reactivity weight of safety rods, control rods and automatic control rod is measured. [29]

AMP Beryllium and graphite blocks monitor neutron and fast neutron fluencies in beryllium and graphite blocks within the MARIA core (Fig. 8). Roman numerals and letters indicate the position of the graphite blocks in reactor core. The colours define the fluency of fast neutrons as a fraction of limit – the darker the filling, the higher the neutron fluency. The highest value of the fluency accounts to $4.16 \cdot 10^{20}$ n/cm^2 [30].

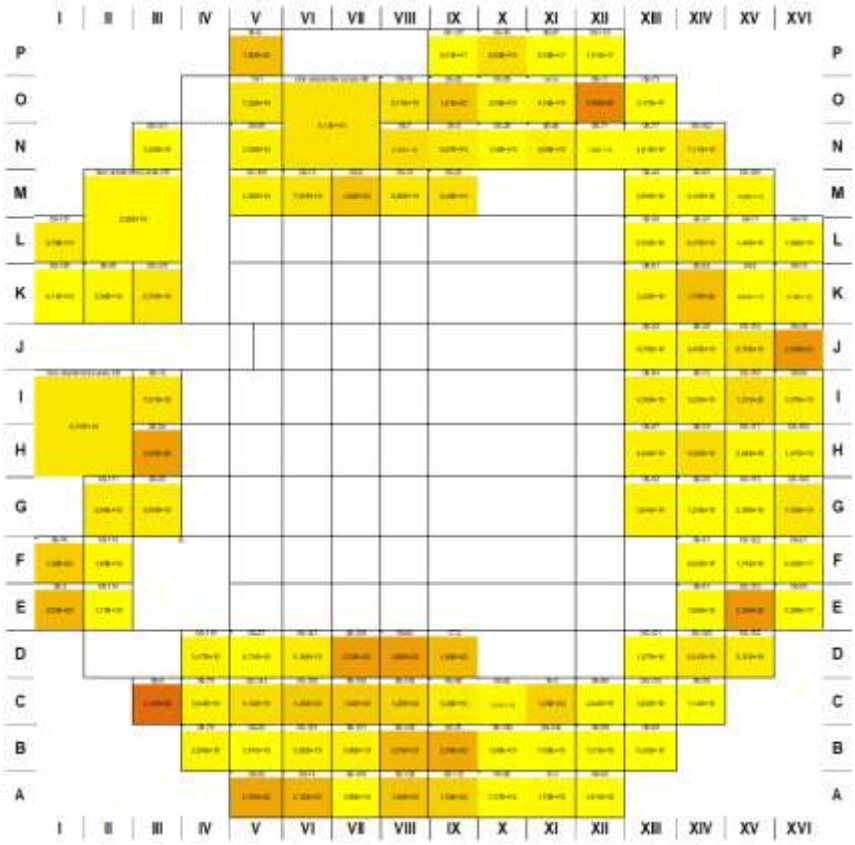

Figure 11. The calculation results of the fluencies in graphite blocks in the reactor MARIA

The visual inspection of the blocks assumes verification of its shape, i.e. dents, undulation, cracks, corrosion and erosion of graphite blocks cladding as well as arcuation of the blocks. Deformations of the block's foot that may lead to difficulties in block insertion to the MARIA core. The particular attention shall be given to the possible blistering in the close area to the graphite blocks – in particular on the welds of the graphite cladding [27].

5.2.4. Detection of ageing effects

The core of each of the programmes is the detection of the ageing effects. The various examination techniques are used to assure the detection of the ageing based on the parameters set in Parameters monitored. Basing on the design of SSCs, their structural materials and internal and external operating experiences the detection measures are provided.

Different methods, including inter alia destructive and non-destructive examination, in-service inspection witness examination, are applied to deal with the ageing effects. It is

obvious that detection methods used in nuclear power plants and other industries may be useful for research reactors. Those practices deal with similar ageing degradation but on diverse speeds of deterioration. Additional benefit of such situation is the fact that the standards are in place and may be applicable to the research reactors. If such standards exist and are applicable to MARIA reactor, the detection of the ageing was based on those.

Should by any case the frequencies of the examinations differ to those provided in AMP matrix, the exceptions shall be provided in this section.

Two examples of the implementation of the Detection of ageing effects within the AMP are shown below:

Electrical cables

The AMP programme evaluates the ageing effects through periodic measurements and tests of electrical cables. The frequencies of the activities differ and depend on the environmental conditions and are divided into three groups:

Group 1 – Measurement cables subjected to high neutron and gamma radiation;

Group 2 – Electrical cables subjected to at least one adverse condition that may lead to accelerated ageing of jacket, conductor or shielding;

Group 3 – Electrical cables subjected to standard conditions that do not lead to accelerated ageing of jacket, conductor or shielding. [31]

Concrete structures

The Ageing management programme for concrete structures was subdivided into Continuous monitoring, Periodic diagnostics and One-time diagnostics.

Continuous monitoring includes the measurements of the temperature and humidity in the different spots in reactor building and close to biological shield of the reactor.

The Periodic diagnostics includes visual inspection of the structures (surface and internal degradation); radiometric, resistance, dielectric or carbide method (humidity of the concrete); ultrasound or sclerometer measurements (compressive strength); analysis of the temperature and humidity measurements.

The restrictions on destructive testing methods resulted in creation One-time diagnostics. It assumes performing destructive testing on the probes obtained during repairs and

modernizations. The One-time diagnostics includes the measurements of the weight and density of the probes; compressive strengths tests; dehumidification; perviousness of the concrete analysis; as well as the carbonatization analysis. [32]

5.2.5. Monitoring and trending

There are several ways to assess the ageing of the components and one should remember that non-destructive testing methods relay on the comparison method. The collation of two components, the witness periodic examination, comparison between the material sample NDT and the SSCs are the primary approaches to follow the deterioration of the components.

The data obtained during the programme elaboration, implementation, prosecution as well as update is both quantitative and qualitative. Although the requirement is set, there are some exceptions due to the lack of possibility to assess all the data. According to IAEA [17], the extent to which the trending is possible depends on the ageing indicators.

Additionally, both, process and environmental conditions, as well as results of the detection, prevention, mitigation and corrective actions shall be collected and analysed. The accurate and in time detection of ageing requires the trending activities in management of ageing. Therefore, the mechanisms to collect, storage and analyse data from the ageing management was established.

In general, the monitoring and trending in ageing management specific programmes is performed for the attributes stated in Parameters monitored section.

5.2.6. Acceptance criteria

Precede sections focus on the applying actions to the specific AMP programme. For the programme to be effective, the quantitative or qualitative acceptance criteria are needed. The values shall be set in such manner that the intended safety functions of the SSCs will not, by any chance, be jeopardized.

Therefore, the evaluation of measured and taken parameters by means of the acceptance criteria shall be elaborated. The failure to comply with intended set points stated results in necessity of implementation of Corrective actions. Proper acceptance criteria based on the understanding of ageing mechanisms and failure modes of the SSCs results in the high level of assurance that the SSCs intended function will be maintained.

The example approaches from the AMP:

Pumps

The below mentioned deviations from recommendations stated by the producer of the pump as well as the degradation mechanisms detected are unaccepted:

- Physical properties of the process fluid (chemical composition, temperature, viscosity, conductivity) deviated from the pump's producer recommendations;
- Lower than required NPSHA (Net Positive Suction Head Available);
- The vibration level exceeds the alarming level;
- The noise increase;
- The temperature of the bearings and shell of the pump exceeds the base value;
- The change in inset balance; [33]

Pipelines

It is expected that results of ultrasonic and/or radiographic testing for welds will be at least quality level for class B in Accordance with the current Polish standard for Quality levels for imperfections. [34]

Figure 12. Left - NDT of reactor pool cooling system; Right - ultrasonic flaw detector used in the tests [35]

5.2.7. Corrective actions

Taking into account that the intended safety function of the SSCs shall not be jeopardized, the corrective actions should be applied in the case of not meeting the acceptance criteria. The corrective actions should be addressed basing on operating experience, standards and quality assurance programme within the organization.

The AMP identifies the corrective actions to be taken in case of the unaccepted degradation of SSCs. These actions lead to the fulfilment of the elaborated requirements or focuses on the replacement of the component.

The example approaches from the AMP:

Nuclear instrumentation and control system (UAN) [36]

The below mentioned corrective actions are eligible for the UAN system to comply with the acceptance criteria:

- Replacement of the measurement circuit or it's elements;
- Calibration of the measurement circuit;

Pumps [33]

The evaluation of all unacceptable test results is carried out. The corrective actions are carried out in accordance with appropriate conservation instruction and the manufacturers guidelines. Were the leaks found, the further operations are described in the instruction of leakages evaluation.

5.2.8. Internal and external operating experiences

A special consideration shall be given to the reactor specific operating experience based on the maintenance and ageing management. The internal experiences, in particular in the case of research reactor because of its unique design, are crucial for the proper understanding of the ageing.

The operating organization shall also use the industry operating experience from all around the globe using international cooperation programmes. The IAEA Research Reactor Ageing Database System (RRADB), Incident Reporting System for Research Reactors (IRSRR) are good examples of the following the external international operating experiences.

Additionally, the international experiences gained from operating organization meetings such as International Group of Research Reactors (IGORR), Research Reactor Fuel Management (RRFM) and IAEA meetings is implemented in AMP.

The example approaches from the AMP

Graphite blocks [27]:

In July and August of 2013 the visual inspection of 57 graphite blocks was performed. The fluence of these were in the range of $2.5 \cdot 10^{19}$ to $1.7 \cdot 10^{21}$ n/cm^2. No deformations or degradations of aluminium cladding were observed. Additionally, 20 graphite blocks with the highest fluence were inspected using NDE – radiography. The purpose of the radiography was the evaluation of the length of the gap between graphite and upper cap. The main reason for choosing the radiography is the change of the length of graphite with fluence – so called irradiation induced dimensional changes in graphite. The structural graphite displays a nonuniformity in its physical properties change with neutron fluency increase.

Figure 13. The X-ray image of the gap between the graphite and the upper cap in graphite block.

Absorbing rods *[10]*

Fast increase of the core reactivity can occur as a result of breaching or burning out an absorbing rod. More probable is the latter case; it is bound with deterioration of heat removal from the absorber due to coolant flow bypassing through the core matrix.

Additionally, on 5 July 1995, during the overbalance of absorbing rods, at the power of 20 MW, the operator of the reactor noticed the fluctuations of power. The reactor was shut downed due to the A120 safety signal (120% of set power signal from proportional counters instrumentation). The situation occurred several times before the root causes were discovered. The visual inspection of the rod on 10 July resulted in affirmative that the absorber part was burned out 20 cm below upper cap. The further investigation found the lack of the proper heat removal from the absorbing rods. The core flow by-pass occurred as the human error occurred – one plug in block was removed resulting change of the pressure drop on the core. The bypass flow limited cooling of the most heated absorbing rod. The additional measurement of pressure drop in the core matrix were established. To avoid such situations, the prestart-up procedure on the pressure drop on the core was implemented.

6. Summary

The lessons learned following the fatal event in Fukushima resulted in the establishment of the mechanism to implement continuous improvement to the nuclear safety by the mechanisms of the TPRs. The topic for the first TPR that took place in 2017 was the ageing management of nuclear power plants and research reactors. The forum of exchange of information, experiences and broad discussions was established. The follow-up improvement programmes will be established improving ageing management programmes within the Europe. National Centre for Nuclear Research was the participant of the review.

In 2015, NCBJ received conditioned Licence for operation of MARIA research reactor. The requirements issued by the President of PAA involved, among the others, the deadlines for establishment of classification of SSCs of MARIA reactor and ageing management programme of crucial SSCs.

The aim of the presented work was to comply with Licence, Atomic Law and international standards – especially the IAEA safety standards. The project was focused on the establishment of the AMP framework, requirements for particular groups of components and dealing with multiply ageing mechanisms. The work included preparation of requirements, guidelines for the development of further activities and focused on the practical implementation of the programme.

The project contained several parts: the development of the methodology based on the international standards and guides; providing the general approach and requirements for the AMP for MARIA reactor, screening of SSCs within the scope of AMP; definement of ageing mechanisms related to the MARIA reactor; and finally setting the requirements and implementing them in the elements of AMP.

The methodology development focuses on the process of gathering inputs and requirements for the AMP in international standards and guides. The IAEA SSR-3 imposed the requirement on the fulfilment of the three main safety functions of the nuclear facilities. The safety series guides, in particular SSG-10, give detail on the particular aspects of the main safety functions, underlining the importance of proper maintenance and ageing management. Therefore, the first chapter covers also the general ageing description, its possible negative effects and the basic tools to manage and mitigate the ageing.

General approach used in the AMP is based on the methodology presented in the Ageing Management for Nuclear Power Plants (NS-G-2.12). Although the approach presented in SSG-30 was chosen as it was fully applicable to MARIA reactor, the PDCA is still under full

implementation in MARIA reactor. The PDCA approach consists of five elements: Plan, Do, Check, Act and the understanding of the ageing of SSCs. These activities shall focus on:

- The periodic assessment of conditions of SSCs, the update of AMP basing on the experiences and analysis of influence of new experimental devices on the ageing of the reactor;
- The implementation of actions, operation of the reactor within the limits implemented by AMP and control of the environmental and set parameters;
- The functional tests, inspections and archiving their results;
- The application of preventive and corrective actions and the replacement of the components with regard to their ageing parameters;
- The continuous research on the ageing mechanisms and focus on the screening and grouping as well as trend analysing and establishing the R&D programmes.

The second chapter gives details on the development of the management system for AMP in MARIA reactor. The management system covers the management responsibility, resource management, process implementation and measurement and assessment of effectiveness of process. The section specifies the current status of management system in NCBJ, the roles and responsibilities of DEJ employees and addresses the methods of surveying the AMP.

The IAEA underlines the importance of classification of SSCs of nuclear facility. The proper classification that includes all elements indicated in Agency guide SSG-30 gives the basis for other processes in the reactor – maintenance, ageing management, modernizations, and experiments. The safety classification gives an overview on the importance of the particular components of the reactor and lead to effective actions. Therefore, the preliminary selection of SSCs within AMP scope shall be based on the safety classification of the facility.

The lack of proper Safety Classification of SSCs in MARIA reactor excludes the possibility to use this mentioned above approach. Therefore, the work proposes alternative methodology to comply with safety standards. The selection within the scope of AMP is based on importance of components in two chapters of SAR: Chapter 16 and 17. The SSCs that fulfil the safety features in safety analysis and/or are necessary for normal operations are covered by the scope of MARIA AMP.

Additionally, the IAEA recommendations encourage grouping the components in order

to reduce the resources needed for the analysis. The further steps should be based on the study of the degradation methods on the groups of SSCs, rather than the particular components. The basis for the grouping components shall be established basing on working (pressure, fluid temperature, radiation doses) and environmental conditions (humidity, ambient temperature, etc.), materials (types of steel, aluminium) and the types of SSCs (pumps, valves, tanks).The analysis of mentioned above parameters can indicate a wide range of exclusions from the scope of the AMP.

The proper AMP shall contain the analysis of the ageing mechanisms. The gradual changes that are implicated by the time can be divided into two groups: physical ageing and obsolescence. The study of physical ageing focuses on the mechanical properties of the SSCs and their possible degradation with time. On the opposite, the obsolescence arises from the changes in the current state of knowledge, including standards, regulations, technology advances, etc.

The AMP in MARIA reactor copes with the following types of obsolescence: changes in technology; changes in nuclear safety requirements; changes in documentation; inadequacies in design; improper maintenance and operation and incomprehension of ageing mechanisms. Also, the following physical ageing phenomena's are reflected in the AMP: ionizing radiation; temperature; pressure; vibration; liquid and solid interactions. The work gives examples on the reactor procedures dealing with the mentioned above elements.

The final part of the project focuses on selected elements of the AMP required by the international standards. The integration of these elements in procedures implements the required actions and gives insights into the ageing of components. Such integration is realised by the ageing management matrix and ageing management programmes. The AMP matrix should cover the following elements: the designation of the SSCs, the group, the environmental and process conditions of SSCs, the ageing mechanisms, the replacement easiness and the frequency of the activities.

7. Bibliography

[1] Council Directive 2014/87/Euratom of 8 July 2014 amending Directive 2009/71/Euratom establishing a Community framework for the nuclear safety of nuclear installations

[2] A.M. Shokr, Issues and Challenges, and IAEA Activities on Research Reactor Safety, IAEA, Vienna 2017

[3] INTERNATIONAL ATOMIC ENERGY AGENCY, Safety of Research Reactors, IAEA Safety Standards Series No. SSR-3, IAEA, Vienna (2016)

[4] INTERNATIONAL ATOMIC ENERGY AGENCY, Safety of Research Reactors, IAEA Safety Standards Series No. NS-R-4, IAEA, Vienna (2005)

[5] RGWG Report to WENRA, Report Topical Peer Review 2017 Ageing Management Technical Specifications for the National Assessment Reports

[6] ACT OF PARLIAMENT of 29 November 2000 Atomic Law

[7] Regulation of the Council of Ministers of 11 February 2013 on requirements for the commissioning and operation of nuclear facilities

[8] ZEZWOLENIE nr 1/2015/MARIA z dnia 31 marca 2015 r.

[9] INTERNATIONAL ATOMIC ENERGY AGENCY, Periodic Safety Review for Nuclear Power Plants, IAEA Safety Standards Series No. SSG-25, IAEA, Vienna (2013)

[10] K. Pytel et al, Safety Analysis Report of MARIA reactor, ERBM-2015, Świerk (2015)

[11] https://www.ncbj.gov.pl/en/about-us/ncbj-brief

[12] INTERNATIONAL ATOMIC ENERGY AGENCY, Use of a Graded Approach in the Application of the Safety Requirements for Research Reactors, IAEA Safety Standards Series No. SSG-22, IAEA, Vienna (2012)

[13] INTERNATIONAL ATOMIC ENERGY AGENCY, Ageing Management for Research Reactors, IAEA Safety Standards Series No. SSG-10, IAEA, Vienna (2010)

[14] EUROPEAN ATOMIC ENERGY COMMUNITY, FOOD AND AGRICULTURE ORGANIZATION OF THE UNITED NATIONS, INTERNATIONAL ATOMIC ENERGY AGENCY, INTERNATIONAL LABOUR ORGANIZATION, INTERNATIONAL MARITIME

ORGANIZATION, OECD NUCLEAR ENERGY AGENCY, PAN AMERICAN HEALTH ORGANIZATION, UNITED NATIONS ENVIRONMENT PROGRAMME, WORLD HEALTH ORGANIZATION, Fundamental Safety Principles, IAEA Safety Standards Series No. SF-1, IAEA, Vienna (2006)

[15] INTERNATIONAL ATOMIC ENERGY AGENCY, Meeting Report of The IAEA Technical Meeting on Research Reactor Ageing Management, Refurbishment and Modernization, Vienna, Austria, 30 Oct-03 Nov 2017. IAEA

[16] U.S. Nuclear Regulatory Commission, NRC guidelines for domestic licensing of production and utilization facilities, 10 CFR Part 50, USA

[17] INTERNATIONAL ATOMIC ENERGY AGENCY, Ageing Management for Nuclear Power Plants: International Generic Ageing Lessons Learned (IGALL), IAEA Safety Reports Series No. 82, IAEA, Vienna (2015)

[18] U.S. Nuclear Regulatory Commission, Generic Aging Lessons Learned (GALL) Report, NUREG-1801, USA, 2010

[19] INTERNATIONAL ATOMIC ENERGY AGENCY, Ageing Management for Nuclear Power Plants, IAEA Safety Guide No. NS-G-2.12, IAEA, Vienna (2009)

[20] B. Piwowarski, P. Nowakowski, Ageing Management Programme for MARIA Research Reactor, Świerk (2018)

[21] E. Borek-Kruszewska, J. Piąstka, Program Zapewnienia Jakości dla Obiektu Reaktora MARIA, PZJ-MARIA-15, Otwock (2015)

[22] J. Ośko, A. Hryczuk, K. Krogulec, K. Krzysztoszek, Księga Zintegrowanego Systemu Zarządzania, Otwock (2014)

[23] E. Borek-Kruszewska et al., Klasyfikacja bezpieczeństwa Systemów oraz Elementów Konstrukcji i Wyposażenia reaktora badawczego MARIA, Otwock (2014)

[24] The Westinghouse AP1000 Advanced Nuclear Plant, Plant description, Westinghouse (2003) http://www.apcnean.org.ar/arch/3e139fc91ebe2e675db2194460badc7c.pdf

[25] R. Prokopowicz, Aneks 2016/3 do Eksploatacyjnego Raportu Bezpieczeństwa Reaktora MARIA Analiza wykorzystania pochew elementów paliwowych reaktora MARIA wykonanych ze stopu E110, Otwock (2016)

[26] B. Zając, Spotkanie „Starzenie wykładziny basenu reaktora MARIA”, Otwock (2018)

[27] B. Piwowarski, PZPS Bloki berylowe i grafitowe, Otwock (2018)

[28] B. Piwowarski, PZPS Zasilanie awaryjne, Otwock (2018)

[29] B. Piwowarski, PZPS Pręty pochłaniające, Otwock (2018)

[30] A. Niepokólczycka-Fenik, R. Prokopowicz, Assessment of fast neutron fluence in graphite blocks in MARIA research reactor (draft), Otwock (2019)

[31] P. Szaforz, B. Piwowarski, PZPS Kable elektryczne i rozdzielnie, Otwock (2018)

[32] B. Piwowarski, PZPS Konstrukcje betonowe, basing on T. Piotrowski et al., Procedury zarządzania procesem starzenia konstrukcji betonowych Reaktora MARIA, Warszawa (2018)

[33] B. Piwowarski, PZPS Pompy, Otwock (2018)

[34] B. Piwowarski, PZPS Rurociągi, Otwock (2018)

[35] B. Zając, Sprawozdanie z oceny jakości połączeń spawanych w reaktorze MARIA, Otwock (2019)

[36] B. Piwowarski, PZPS UAN, Otwock (2018)