UNIVERSITAT POLITÈCNICA DE CATALUNYA
BARCELONATECH
Escola d'Enginyeria de Barcelona Est

TREBALL FI DE GRAU

Grau en Enginyeria Electrònica Industrial i Automàtica

SISTEMA DE GESTIÓ DOMÓTICA PER OPTIMITZAR EL CONSUM ENÈRGETIC D'UN HABITATGE

ANNEXOS

Autors: Pérez Porras, Sergio

Portell Vilà, Arnau

Director: Manzanares Brotons, Manuel Andrés

Convocatòria: Gener, 2019

Índex

1. PROGRAMACIÓ PIC 2
2. PROGRAMACIÓ APLICACCIÓ MOBIL 22
   2.1. Pantalla principal 22
   2.2. Control llums 23
   2.3. Control Clima 24
   2.4. Control Persianes 25
   2.5. Control Aigua del Reg 26
   2.6. Control Alarma 27
   2.7. Escenes 28
3. GRAU D'AUTOMATITZACIÓ SEGONS CEDOM 29
4. DATASHEETS DELS COMPONENTS 34
   4.1. PIC 18F4550 34
   4.2. EEPROM 24LC256 50
   4.3. REAL CLOCK TIME DS1307 57
   4.4. LCD 16X2 I2C 61
   4.5. TC084 64
   4.6. PCF8574 68
   4.7. ULN2803 75
   4.8. MODUL BUETOOTH HC-06 80
   4.9. TC1047 86
   4.10. ACS712 90

1. PROGRAMACIÓ PIC

```c

////////////////////////////////////////////////////////////////////////////
// AUTORS: ARNAU PORTELL I SERGIO PÉREZ                                   //
// PROGRAMA PEL CONTROL DE LA PLACA DE PROTOTIP DE PROVES                 //
// UNIVERSITAT POLITECNICA DE CATALUNYA (EEBE)                            //
//                                                                        //
////////////////////////////////////////////////////////////////////////////
// TREBALL FI DE GRAU                                                     //
//                                                                        //
// PROGRAMA: S'HA DESENVOLUPAT EN  CCS C COMPILER UTILITZANT              //
// LLEGUAJE DE PROGRAMACIÓ C.                                             //
//                                                                        //
// UTILITAT: EL PROGRAMA S'ENCARREGA DE TRACTAR LES VARIABLES QUE MESUREN ELS//
//SENSORS I FER ACTUAR ELS ACTUADORS EN CONSEQÜÈNCIA                      //
//                                                                        //
////////////////////////////////////////////////////////////////////////////

#include <main.h>
//Es defineix connexions per el bus i2c
#define PCF_SDA  PIN_B0
#define PCF_SCL  PIN_B1

//Ús de protocols de comunucació
#use i2c(master, sda=PCF_SDA, scl=PCF_SCL)
#use RS232(BAUD=9600, BITS=8, PARITY=N, XMIT=PIN_C6, RCV=PIN_C7)

#define PCF_ID   7
#define PCF      64  // Pot ser 112 ó 64 (PCF8574T=64,PCF8574A=112,PCF8574=64)
#define blacking  P3
#define LCD_RS    P0
#define LCD_RW    P1
#define LCD_E     P2
#define LCD_DB4   P4
#define LCD_DB5   P5
#define LCD_DB6   P6
#define LCD_DB7   P7

//Es defineixen els pins dels pulsadors
#define pulsmes PIN_D7 // pin 30 PIC
#define pulsmenys PIN_D6 // pin 29 PIC

//Es defineixen els pins dels sensors digitals
#define pluja PIN_A4 // pin 6 PIC
#define gas PIN_A5 // pin 7 PIC
#define pir PIN_E0 // pin 8 PIC
#define finalcarrera PIN_E1 // pin 9 PIC

//Es defineixen els pins dels actuadors
#define clima PIN_B7 // pin 40 PIC
#define endolls PIN_B6 // pin 39 PIC
#define reg PIN_B5 // pin 38 PIC
#define alarma PIN_B4 // pin 37 PIC
#define llum PIN_B3 // pin 36 PIC

//Es criden les llibreries
#include <LCD_PCF.c> //llibreria LCD
#include<ds1307a.c>  //LLibreria rellotge
#include <MEM24256.c> //llibreria memoria
#include <math.h> //llibreria funcions matemátiques

//Es defineixen les variables del rellotge
int sec;
int min;
int hrs;
int day;
int month;
int yr;
```

```
 68: int dow;
 69:
 70: //Es defineixen variables per el control d'estats dels sensors i
 71: //Actuadors digitals
 72: int8 variable_pluja=0;
 73: int8 variable_gas=0;
 74: int8 variable_pir=0;
 75: int8 variable_fc=0;
 76: int1 escena_dormir=0;
 77: int1 escena_foracasa=0;
 78: int1 escena_hivern=0;
 79: int1 escena_estiu=0;
 80: int1 persiana_up=0;
 81: int1 persiana_down=0;
 82:
 83:
 84: //Es defineixen les variables per tractar les mesures dels sensors analógics
 85: int16 value_adc; // (si 8 bits unsigned int8)
 86: float temp_int;
 87: float temp_ext;
 88: float volt_lux;
 89: float lux;
 90: float intensitat;
 91: float Potencia;
 92:
 93: //Es defineixen variables de consignes predeterminades
 94: int8 vent_consigna=50;
 95: int8 h_on_consigna=0;
 96: int8 temp_consigna=25;
 97: int8 llum_consigna=500;
 98: int t_reg_consigna=4;
 99: float consum_aigua=0;
100: int32 t_regant=0;
101:
102:
103: //Variables de auxiliars
104: int A=0;
105: int1 ok=1;
106: int1 R=0;
107: int1 alarmes=1;
108: int hora_reg=6;
109:
110: //Variables per la comunicació Bluetooh
111: char dat_env;
112: int8 temp_intt;
113: int8 temp_extt;
114:
115: //Variables  per la comunicaccó I2C
116: int8 adressa;
117: int8 valor_env;
118:
119: //Es defineix interrupció externa EXT2 Pulsador "Ok"
120: #int_EXT2
121:   void EXT_isr(void){
122:   ok=~ok;
123:   }
124:
125: //Definim interrupció port serie per comunucació Bluetooth
126: #int_RDA
127:    void Rutina_Serial()
128:     {
129:
130:    dat_env=getc(); //Rep la dada del port serie i el guada a dat_env
131:
132: //---------------------------Llum BLE---------------------
133:    if (dat_env==1) {
134:      Output_high(llum);
```

```
135:    }
136:
137:    if (dat_env==2) {
138:      Output_low(llum);
139:    }
140:  //------------------------Persiana BLE ---------------------------------------
141:      if (dat_env==3) {
142:      persiana_up=1;
143:    }
144:
145:    if (dat_env==4) {
146:     persiana_down=1;
147:    }
148:   //---------------------Consigna reg BLE -------------------------------------
149:    if (dat_env==5) {
150:      t_reg_consigna=t_reg_consigna+1;
151:    }
152:
153:    if (dat_env==6) {
154:     t_reg_consigna=t_reg_consigna-1;
155:    }
156:   if (dat_env==7) {
157:     t_reg_consigna=4;
158:    }
159: //---------------------- Control alarmes BLE ----------------------------------
160:     if (dat_env==8) {
161:     alarmes=0;
162:    }
163:
164:     if (dat_env==9) {
165:     alarmes=1;
166:    }
167:  //----------------------Control Escenes BLE----------------------------------
168:     if (dat_env==10) {
169:     escena_dormir=1;
170:    }
171:
172:     if (dat_env==11) {
173:     escena_dormir=0;
174:    }
175:     if (dat_env==12) {
176:     escena_foracasa=1;
177:    }
178:
179:     if (dat_env==13) {
180:     escena_foracasa=0;
181:    }
182:
183:     if (dat_env==14) {
184:     escena_hivern=1;
185:    }
186:
187:     if (dat_env==15) {
188:     escena_hivern=0;
189:    }
190:     if (dat_env==16) {
191:     escena_estiu=1;
192:    }
193:
194:     if (dat_env==17) {
195:     escena_estiu=0;
196:    }
197:  // -------------------------Control horari del reg----------------------------
198:     if (dat_env==18) {
199:     hora_reg=hora_reg+1;
200:    }
201:     if (dat_env==19) {
```

```
202:     hora_reg=hora_reg-1;
203:    }
204: }
205:
206: // Funció per transmetre mitjançant i2c en els expansors de bus I/O
207: void transmisio_i2c(){
208:
209:      i2c_start(); // Inici
210:      i2c_write(adressa); // Direcció del dispositiu PCF8574+bit mode escritura
211:      i2c_write(valor_env); // Dades a enviar
212:      i2c_stop();
213:    }
214:
215: //Programa principal
216: void main()
217: {
218:      //S'inicialitza LCD
219:      lcd_init();
220:      delay_ms(100);
221:
222:      //ds1307_set_date_time(8,1,19,4,5,55,0); // Es posa el rellotge en hora
223:
224:      //Apago els ports de PCF8574
225:      adressa=0x44;
226:      valor_env=0b00000000;
227:      transmisio_i2c();
228:
229:      adressa=0x46;
230:      valor_env=0b00000000;
231:      transmisio_i2c();
232:
233:      //Es declara la direció de la memoria EEPROM
234:      eeprom_address address;
235:
236:      //S'escriu a la LCD
237:      lcd_putc("\f");
238:      lcd_gotoxy(1,1);
239:      printf(lcd_putc, "Sistema...");
240:      delay_ms (1000);
241:      lcd_gotoxy(1,2);
242:      printf(lcd_putc, "Ences");
243:      delay_ms (1000);
244:      lcd_putc("\f");
245:
246:     //Rellotge del adc, ús del intern
247:     setup_adc(adc_clock_internal);
248:
249:     //S'habilita l'ús dels ports AN0 al AN3, analogics
250:     setup_adc_ports(AN0_TO_AN3);
251:
252:      //Instruccións de configuració de la interrupció externa, polsador OK
253:     enable_interrupts(Global);
254:     enable_interrupts(INT_EXT2);
255:     ext_int_edge(2,H_TO_L);
256:
257:     //Habilitem interrupcions del port serie
258:     enable_interrupts(int_rda);
259:
260:         while(TRUE){
261:  //-----------------------------------------------------------------------------
262:    //Llegeix la temperatura interior
263:      set_adc_channel(0);
264:      delay_us(10);
265:      value_adc=read_adc();
266:      temp_int = (50.0*value_adc/1023.0)-2.0;
267:      delay_ms(50);
268:
```

```
269:      //Guarda la temperatura interior a la memòria
270:      i2c_start(); // Inicio
271:      write_ext_eeprom(address,temp_int);
272:      i2c_stop(); // Stop I2C
273: //-----------------------------------------------------------------------------
274:      //Llegeix la temperatura exterior
275:      set_adc_channel (1);
276:      delay_us(10); //Espera necesaria al cambiar de canal
277:      value_adc =read_adc();
278:      temp_ext = ((80.0*value_adc/1023.0)-20.0)-4.0;
279:      delay_ms(10);
280:
281:      //Guarda la temperatura exterior a la memòria
282:      i2c_start(); // Inici
283:      write_ext_eeprom(address+1,temp_ext);
284:      i2c_stop(); // Stop I2C
285:
286:
287: //-------Enviar dades sensors analògics de temperatura per Bluetooth-----------
288:      temp_intt = (int8) temp_int; //Conversió variable a int
289:      temp_extt = (int8) temp_ext;
290:      printf("S|");                // Enviar dades en el port serie
291:      printf("%d",temp_intt);
292:      printf("|");
293:      printf("%d|\r \n",temp_extt);
294:      delay_ms(100);
295:
296: //-----------------------------------------------------------------------------
297:      //Llegeix el nivell de llum
298:      set_adc_channel (2);
299:      delay_us(10);
300:      value_adc = read_adc();
301:      volt_lux = 1000.0*value_adc  / 1023.0;
302:      delay_us(10);
303:
304:      //Guarda el nivell de llum a la memòria
305:      i2c_start(); // Inici
306:      write_ext_eeprom(address+2,lux);
307:      i2c_stop(); // Stop I2C
308:
309: //-----------------------------------------------------------------------------
310:      //Llegeix la intensitat
311:      set_adc_channel(3);
312:      delay_us(10);
313:      value_adc=read_adc();
314:      intensitat = 50.0*value_adc/1023.0;
315:      Potencia = intensitat*5.0;
316:
317:      //guarda el nivell de la intensitat a la memoria
318:      i2c_start(); // Inicio
319:      write_ext_eeprom(address+3,intensitat);
320:      i2c_stop(); // Stop I2C
321:
322: //-----------------------------------------------------------------------------
323: //-----------------------------------------------------------------------------
324:      //Mira si a plogut o no
325:      if(input(pluja)==0){
326:      variable_pluja = 1;}
327:     else {
328:      variable_pluja = 0;}
329:
330:      //Guarda la variable de finestra oberta a la memòria
331:      i2c_start(); // Inici
332:      write_ext_eeprom(address+4,variable_pluja);
333:      i2c_stop(); // Stop I2C
334:
335: //-----------------------------------------------------------------------------
```

```
336:      //Mira si hi ha fuita de gas
337:      if(input(gas)>0){
338:      variable_gas = 1;
339:      }
340:      else{
341:      variable_gas = 0;
342:      }
343:
344:      //guarda la variable del estat del gas a la memòria
345:      i2c_start(); // Inici
346:      write_ext_eeprom(address+5,variable_gas);
347:      i2c_stop(); // Stop I2C
348:
349: //-----------------------------------------------------------------------------
350:      //Mira si la casa esta ocupada o no
351:      if(input(pir)>0){
352:      variable_pir = 1;}
353:      else{
354:      variable_pir = 0;
355:      }
356:
357:      //Guarda la variable de l'estat de la casa a la memòria
358:      i2c_start(); // Inicio
359:      write_ext_eeprom(address+6,variable_pir);
360:      i2c_stop(); // Stop I2C
361:
362: //-----------------------------------------------------------------------------
363:       //Mira si hi ha alguna porta oberta
364:      if(input(finalcarrera)==0){
365:      variable_fc = 1;}
366:      else{
367:       variable_fc = 0;}
368:
369:      //Guarda la variable de porta oberta a la memòria
370:      i2c_start(); // Inici
371:      write_ext_eeprom(address+7,variable_fc);
372:      i2c_stop(); // Stop I2C
373:
374: //-----------------------------------------------------------------------------
375: //-----------------------------------------------------------------------------
376: //-----------------------------------------------------------------------------
377:
378:       // Visualització del menú
379:       //Variable per navegar pel menú.
380:       if (A<=0 || A>10){
381:       A=0;
382:       }
383:       // Pulsadors sumar o restar
384:       if(input(pulsmes)==0 && ok==0){
385:       A++;
386:       }
387:       if (input (pulsmenys)==0 && ok==0){
388:       A--;
389:       }
390:
391: //-----------------------------------------------------------------------------
392:
393:  //Inicialitza el menú amb la data i l'hora
394:       if (A==0){
395:       ds1307_get_date (day, month, yr, dow);  /// obtenim data
396:       ds1307_get_time (hrs, min, sec);   ///obtenim hora
397:       //ds1307_get_day_of_week(fecha);
398:       lcd_putc("\f");
399:       lcd_gotoxy(1,1);
400:       printf(lcd_putc, "   %02u/%02u/20%02u",day,month,yr);
401:       lcd_gotoxy(2,2);
402:       printf(lcd_putc, "   %02u:%02u:%02u",hrs, min, sec);
```

```
403:        delay_ms(300);
404:        lcd_putc("\f");
405:        }
406: //-----------------------------------------------------------------------------
407:        //Si es la variable A  es un 1 es mostra en el menu la opció ESTAT
408:        if (A==1){
409:       lcd_putc("\f");
410:       lcd_gotoxy(1,1);
411:       printf(lcd_putc, "Estat");
412:       delay_ms(1500);
413:
414:       //Si es prem OK entra l'opció ESTAT
415:       //Es mostra totes les variables mesurades
416:       if (A==1 && ok==1){
417:       ok=0;
418:       lcd_putc("\f");
419:
420: //-----------------------------------------------------------------------------
421: //-----------------------------------------------------------------------------
422:       i2c_start(); // Inici per obtenir la mesura guardada a la memoria
423:       temp_int = read_ext_eeprom(address);
424:       i2c_stop(); // Stop I2C
425:
426:       lcd_gotoxy(1,1);
427:       printf(lcd_putc,"Sensor Temper.");
428:       lcd_gotoxy(1,2);
429:       printf(lcd_putc,"Temp.Int.=%2.1F C",  temp_int);
430:       delay_ms(1500);
431:       lcd_putc("\f");
432: //-----------------------------------------------------------------------------
433:       i2c_start(); // Inici per obtenir la mesura guardada a la memoria
434:       temp_ext = read_ext_eeprom(address+1); //Llegir a la posició de memoria+1
435:       i2c_stop(); // Stop I2C
436:
437:       lcd_gotoxy(1,1); //Mostrar a la posicio 1,2 de la pantalla la temperatura
438:       printf(lcd_putc,"Sensor Temper.");
439:       lcd_gotoxy(1,2);
440:       printf(lcd_putc,"Temp.Ext=%2.1F C", temp_ext);
441:       delay_ms(1500);
442:       lcd_putc("\f");
443:  //-----------------------------------------------------------------------------
444:
445:       i2c_start(); // Inici per obtenir la mesura guardada a la memoria
446:       lux = read_ext_eeprom(address+2);
447:       i2c_stop(); // Stop I2C
448:
449:       lcd_gotoxy(1,1);
450:       printf(lcd_putc,"Sensor Llum");
451:       lcd_gotoxy(1,2);
452:       printf(lcd_putc,"Llum=%2.1F lux ", lux);
453:       delay_ms(1500);
454:       lcd_putc("\f");
455: //-----------------------------------------------------------------------------
456:
457:       i2c_start(); // Inici per obtenir la mesura guardada a la memoria
458:       intensitat = read_ext_eeprom(address+3);
459:       i2c_stop(); // Stop I2C
460:
461:       lcd_gotoxy(1,1);
462:       printf(lcd_putc,"Sensor Inten.");
463:       lcd_gotoxy(1,1);
464:       printf(lcd_putc,"Intensi = %2.1f mA", intensitat);
465:       lcd_gotoxy(1,2);
466:       printf(lcd_putc,"Pot. = %2.1f mW", Potencia);
467:       delay_ms(2000);
468:       lcd_putc("\f");
469: //!//-----------------------------------------------------------------------------
```

```
470: //-----------------------------------------------------------------------------
471:      i2c_start(); // Inici per obtenir la mesura guardada a la memoria
472:      variable_pluja = read_ext_eeprom(address+4);
473:      i2c_stop(); // Stop I2C
474:
475:      lcd_gotoxy(1,1);
476:      printf(lcd_putc,"Sensor Humitat");
477:      if(variable_pluja == 1){
478:      lcd_gotoxy(1,2);
479:      printf(lcd_putc,"Hi ha humitat");
480:      delay_ms(1500);
481:      lcd_putc("\f");}
482:
483:      else{
484:      lcd_gotoxy(1,2);
485:      printf(lcd_putc,"No hi ha humitat");
486:      delay_ms(1500);
487:      lcd_putc("\f");}
488:
489: //!//-----------------------------------------------------------------------------
490:      i2c_start(); // Inici per obtenir la mesura guardada a la memòria
491:      variable_gas = read_ext_eeprom(address+5);
492:      i2c_stop(); // Stop I2C
493:
494:      lcd_gotoxy(1,1);
495:      printf(lcd_putc,"Sensor Gas");
496:      if(variable_gas ==1){
497:      lcd_gotoxy(1,2);
498:      printf(lcd_putc,"Si gas");
499:      delay_ms(1500);
500:      lcd_putc("\f");}
501:
502:      else{
503:      lcd_gotoxy(1,2);
504:      printf(lcd_putc,"No gas");
505:      delay_ms(1500);
506:      lcd_putc("\f");}
507:
508: //!//-----------------------------------------------------------------------------
509:      i2c_start(); // Inici per obtenir la mesura guardada a la memòria
510:      variable_pir = read_ext_eeprom(address+6);
511:      i2c_stop(); // Stop I2C
512:
513:      lcd_gotoxy(1,1);
514:      printf(lcd_putc,"Sensor PIR");
515:      if(variable_pir == 1){
516:      lcd_gotoxy(1,2);
517:      printf(lcd_putc,"Si hi ha presencia");
518:      delay_ms(1500);
519:      lcd_putc("\f");}
520:
521:      else{
522:      lcd_gotoxy(1,2);
523:      printf(lcd_putc,"No hi ha presencia");
524:      delay_ms(1500);
525:      lcd_putc("\f");}
526: //!//-----------------------------------------------------------------------------
527:      i2c_start(); // Inici
528:      variable_fc = read_ext_eeprom(address+7);
529:      i2c_stop(); // Stop I2C
530:
531:      lcd_gotoxy(1,1);
532:      printf(lcd_putc,"Sensor FC");
533:      if(variable_fc == 1){
534:      lcd_gotoxy(1,2);
535:      printf(lcd_putc,"Finestra Oberta");
536:      delay_ms(1500);
```

```
537:      lcd_putc("\f");}
538:      else{
539:      lcd_gotoxy(1,2);
540:      printf(lcd_putc,"Finestra Tancada");
541:      delay_ms(1500);
542:      lcd_putc("\f");}
543:
544: //-----------------------------------------------------------------------------
545:      }
546:      }
547: //-----------------------------------------------------------------------------
548:      //Si la variable A és 2 es mostra en el menú l'opció Actuadors
549:      if (A==2){
550:
551:      lcd_putc("\f");
552:      lcd_gotoxy(1,1);
553:      printf(lcd_putc, "Actuadors");
554:      delay_ms(250);
555:
556:      //Si es prem OK entra a l'opció Actuadors
557:      //Fa actuar tots els actuadors un per un durant un 1,5 segons
558:
559:      if (A==2 && ok==1){
560:      ok=0;
561:      lcd_putc("\f");
562:
563:      //Activa el led de clima
564:      lcd_gotoxy(1,2);
565:      printf(lcd_putc,"Led Clima On");
566:      OUTPUT_HIGH(clima);
567:      delay_ms(1500);
568:      OUTPUT_LOW(clima);
569:      lcd_putc("\f");
570:
571:      //Activa el led dels endolls
572:      lcd_gotoxy(1,2);
573:      printf(lcd_putc,"Led Endolls On");
574:      OUTPUT_HIGH(endolls);
575:      delay_ms(1500);
576:      OUTPUT_LOW(endolls);
577:      lcd_putc("\f");
578:
579:      //Activa el led del reg
580:      lcd_gotoxy(1,2);
581:      printf(lcd_putc,"Led Reg On");
582:      OUTPUT_HIGH(reg);
583:      delay_ms(1500);
584:      OUTPUT_LOW(reg);
585:      lcd_putc("\f");
586:
587:      //Activa el brunzidor d'alarma
588:      lcd_gotoxy(1,2);
589:      printf(lcd_putc,"Alarma On");
590:      OUTPUT_HIGH(alarma);
591:      delay_ms(1500);
592:      OUTPUT_LOW(alarma);
593:      lcd_putc("\f");
594:
595:      //Activa el rele pel control del llum
596:      lcd_gotoxy(1,2);
597:      printf(lcd_putc,"Led Llum On");
598:      OUTPUT_HIGH(llum);
599:      delay_ms(1500);
600:      OUTPUT_LOW(llum);
601:      lcd_putc("\f");
602:
603:      //Envia dades per i2c i activa els leds per la pujada de persianes
```

```
604:      lcd_gotoxy(1,2);
605:      printf(lcd_putc,"Persiana Up");
606:
607:      adressa=0x44;
608:      valor_env=0b11111111;
609:      transmisio_i2c();
610:      delay_ms(1500);
611:
612:      adressa=0x44;
613:      valor_env=0b00000000;
614:      transmisio_i2c();
615:      delay_ms(1500);
616:      lcd_putc("\f");
617:
618:      //Envia dades per i2c i activa els leds per la baixada de persianes
619:      lcd_gotoxy(1,2);
620:      printf(lcd_putc,"Persiana Down");
621:      adressa=0x46;
622:      valor_env=0b11111111;
623:      transmisio_i2c();
624:      delay_ms(1500);
625:
626:
627:      adressa=0x46;
628:      valor_env=0b00000000;
629:      transmisio_i2c();
630:      lcd_putc("\f");
631:       }
632:     }
633:  //--------------------------------Persianes-----------------------------------
634:      //Si la variable A és 3 es mostra el menú l'opció Persianes
635:      if (A==3){
636:      lcd_putc("\f");
637:      lcd_gotoxy(1,1);
638:      printf(lcd_putc, "Persianes");
639:      delay_ms(250);
640:
641:      //si es prem OK entra en la opció Persianes
642:      //Es pot regular la pujada i baixada de persianes
643:
644:          if (A==3 && ok==1){
645:          ok=0;
646:          lcd_gotoxy(1,2);
647:          printf(lcd_putc, "Pujar?");
648:          delay_ms(1500);
649:             if(ok==1){
650:             ok=0;
651:             lcd_gotoxy(1,2);
652:             printf(lcd_putc, "Pujar pers.1?");
653:             delay_ms(1500);
654:                if(ok==1){
655:                ok=0;
656:                lcd_gotoxy(1,2);
657:                printf(lcd_putc, "OBRINT PERS.1");
658:                delay_us(10);
659:                adressa=0x44;
660:                valor_env=0b11111111;
661:                transmisio_i2c();
662:                delay_ms(4000);
663:                adressa=0x44;
664:                valor_env=0b00000000;
665:                transmisio_i2c();
666:                lcd_putc("\f");
667:                }
668:             }
669:
670:          lcd_putc("\f");
```

```
671:          lcd_gotoxy(1,2);
672:          printf(lcd_putc, "Baixar?");
673:          delay_ms(1500);
674:             if(ok==1){
675:             ok=0;
676:             lcd_gotoxy(1,2);
677:             printf(lcd_putc, "Baixar pers.1?");
678:             delay_ms(1500);
679:                if(ok==1){
680:                ok=0;
681:                lcd_gotoxy(1,2);
682:                printf(lcd_putc, "TANCANT PERS.1");
683:                delay_us(10);
684:                adressa=0x46;
685:                valor_env=0b11111111;
686:                transmisio_i2c();
687:                delay_ms(4000);
688:                adressa=0x46;
689:                valor_env=0b00000000;
690:                lcd_putc("\f");
691:                }
692:             }
693:          }
694:        }
695:  //--------------------------------Tendal--------------------------------------
696:      //Si  la variable A és 4 es mostra el menú l'opció Tendal
697:      if (A==4){
698:      lcd_putc("\f");
699:      lcd_gotoxy(1,1);
700:      printf(lcd_putc, "Tendal");
701:      delay_ms(250);
702:
703:      //Si es prem OK entra a l'opció Tendal
704:      //Es pot recollir o extreure en tendal
705:
706:       if(A==4 && ok==1){
707:          while(ok==1){
708:          lcd_gotoxy(1,2);
709:          printf(lcd_putc,"Vent.consigna=%d ",  vent_consigna);
710:          delay_ms(250);
711:          lcd_putc("\f");
712:             if (input(Pulsmes)==0 && ok==1){
713:             vent_consigna=vent_consigna+1;
714:             }
715:
716:             if (input(Pulsmenys)==0 && ok==1){
717:             vent_consigna=vent_consigna-1;
718:             }
719:       }
720:          lcd_gotoxy(1,2);
721:          printf(lcd_putc, "Extreure Tendal?");
722:          delay_ms(1500);
723:          lcd_putc("\f");
724:             if(ok==1){
725:             ok=0;
726:             lcd_gotoxy(1,2);
727:             printf(lcd_putc, "Desplegant Tendal");
728:             delay_ms(500);
729:             lcd_putc("\f");}
730:          lcd_gotoxy(1,2);
731:          printf(lcd_putc, "Recollir Tendal?");
732:          delay_ms(1500);
733:          lcd_putc("\f");
734:             if(ok==1){
735:             ok=0;
736:             lcd_gotoxy(1,2);
737:             printf(lcd_putc, "Plegant Tendal");
```

```
738:             delay_ms(500);
739:             lcd_putc("\f");}
740:      }
741:      }
742:   //-------------------------------Llum----------------------------------------
743:      //Si la variable A és 5 es mostra el menú l'opció Llum
744:      if (A==5){
745:      lcd_putc("\f");
746:      lcd_gotoxy(1,1);
747:      printf(lcd_putc, "Llum");
748:      delay_ms(250);
749:
750:       //si es prem OK entra a l'opció Llum
751:      //Es pot controlar l'encensa i apagada de les llums
752:
753:      if(A==5 && ok==1){
754:          while(ok==1){
755:          lcd_gotoxy(1,2);
756:          printf(lcd_putc,"Llum.consig.=%d ",  llum_consigna);
757:          delay_ms(1500);
758:          lcd_putc("\f");
759:             if (input(Pulsmes)==0 && ok==1){
760:             llum_consigna=llum_consigna+1;
761:             }
762:
763:             if (input(Pulsmenys)==0 && ok==1){
764:             llum_consigna=llum_consigna-1;
765:             }
766:          }
767:
768:          lcd_gotoxy(1,2);
769:          printf(lcd_putc, "On?");
770:          delay_ms(1500);
771:             if(ok==1){
772:             ok=0;
773:             lcd_gotoxy(1,2);
774:             printf(lcd_putc, "On llum 1?");
775:             delay_ms(1500);
776:                if(ok==1){
777:                ok=0;
778:                OUTPUT_HIGH(llum);
779:                printf(lcd_putc, " Llum 1 On");
780:                delay_ms(250);
781:                lcd_putc("\f");
782:                }
783:             }
784:          lcd_gotoxy(1,2);
785:          printf(lcd_putc, "Off?");
786:          delay_ms(1500);
787:             if(ok==1){
788:             ok=0;
789:             lcd_gotoxy(1,2);
790:             printf(lcd_putc, "Off llum 1?");
791:             delay_ms(1500);
792:                if(ok==1){
793:                ok=0;
794:                OUTPUT_LOW(llum);
795:                lcd_gotoxy(1,2);
796:                printf(lcd_putc, "Llum 1 Off");
797:                delay_ms(250);
798:                lcd_putc("\f");
799:                }
800:             }
801:          }
802:      }
803:  //-------------------------------Clima---------------------------------------
804:      //Si  la variable A és 6 es mostra el menú l'opció Clima
```

```
805:      if (A==6){
806:      lcd_putc("\f");
807:      lcd_gotoxy(1,1);
808:      printf(lcd_putc, "Clima");
809:      delay_ms(250);
810:
811:      //si es prem OK entra a l'opció Clima
812:      //Es pot controlar l'encensa i apagada del clima i regular la temperatura
813:
814:      if(A==6 && ok==1){
815:          while(ok==1){
816:          lcd_gotoxy(1,2);
817:          printf(lcd_putc,"Temp.cons=%d min ",  temp_consigna);
818:          delay_ms(250);
819:          lcd_putc("\f");
820:             if (input(Pulsmes)==0 && ok==1){
821:             temp_consigna=temp_consigna+1;
822:             }
823:
824:             if (input(Pulsmenys)==0 && ok==1){
825:             temp_consigna=temp_consigna-1;
826:             }
827:          }
828:
829:       lcd_gotoxy(1,2);
830:          printf(lcd_putc, "Encendre Clima?");
831:          delay_ms(1500);
832:          lcd_putc("\f");
833:             if(ok==1){
834:             ok=0;
835:             OUTPUT_HIGH(clima);
836:             lcd_gotoxy(1,2);
837:             printf(lcd_putc, "Clima ON");
838:             delay_ms(1500);}
839:
840:        lcd_gotoxy(1,2);
841:          printf(lcd_putc, "Apagar Clima?");
842:          delay_ms(1500);
843:          lcd_putc("\f");
844:             if(ok==1){
845:             ok=0;
846:             OUTPUT_LOW(clima);
847:             lcd_gotoxy(1,2);
848:             printf(lcd_putc, "Clima OFF");
849:             delay_ms(1500);
850:             }
851:     }
852:     }
853:  //--------------------------------Electrodimèstics----------------------------
854:      //Si la variable A és 7 es mostra el menú l'opció electrodomèstics
855:      if (A==7){
856:      lcd_putc("\f");
857:      lcd_gotoxy(1,1);
858:      printf(lcd_putc, "Electrodomestics");
859:      delay_ms(250);
860:
861:      //Si es prem el polsador OK entra a l'opció Electrodomèstics
862:      //Es pot controlar l'encensa i apagada dels endolls dels electrodomèstics
863:      //i regular-ne l'hora d'habilitació
864:
865:      if(ok==1 && A==7){
866:
867:          while(ok==1){
868:          lcd_gotoxy(1,2);
869:          printf(lcd_putc,"h.on.consigna=%d h",  h_on_consigna);
870:          delay_ms(250);
871:          lcd_putc("\f");
```

```
872:             if (input(Pulsmes)==0 && ok==1){
873:             h_on_consigna=h_on_consigna+1;
874:             }
875:
876:             if (input(Pulsmenys)==0 && ok==1){
877:             h_on_consigna=h_on_consigna-1;
878:             }
879:          }
880:
881:       lcd_gotoxy(1,2);
882:          printf(lcd_putc, "Electro. ON?");
883:          delay_ms(1500);
884:          lcd_putc("\f");
885:             if(ok==1){
886:             ok=0;
887:             OUTPUT_HIGH(endolls);
888:             lcd_gotoxy(1,2);
889:             printf(lcd_putc, "Elect. on");
890:             delay_ms(500);}
891:
892:        lcd_gotoxy(1,2);
893:          printf(lcd_putc, "Electro. OFF?");
894:          delay_ms(1500);
895:          lcd_putc("\f");
896:             if(ok==1){
897:             ok=0;
898:             OUTPUT_LOW(endolls);
899:             lcd_gotoxy(1,2);
900:             printf(lcd_putc, "Elect. OFF");
901:             delay_ms(500);
902:             }
903:       }
904:       }
905:    //--------------------------------Aigua reg----------------------------------
906:       //Si la variable A és 8 es mostra el menú l'opció Reg
907:       lcd_putc("\f");
908:       lcd_gotoxy(1,1);
909:       printf(lcd_putc, "Reg");
910:       delay_ms(250);
911:
912:       //si es prem OK entra a l'opció de Reg
913:       //Es pot visualitzar l'hora d'inici del reg i modificar-la mitjançant la
914:       //app. També, es pot regular el temps de reg i encendre/apagar
915:
916:        if(ok==1 && A==8){
917:
918:           lcd_gotoxy(1,2);
919:          printf(lcd_putc,"Hora inici reg=%d h", hora_reg);
920:          delay_ms(1500);
921:
922:          lcd_gotoxy(1,2);
923:          printf(lcd_putc,"cons.aigua=%2.1F L",   consum_aigua);
924:          delay_ms(1500);
925:
926:          while(ok==1){
927:          lcd_gotoxy(1,2);
928:          printf(lcd_putc,"temps reg=%d min",  t_reg_consigna);
929:          delay_ms(250);
930:          lcd_putc("\f");
931:             if (input(Pulsmes)==0 && ok==1){
932:             t_reg_consigna=t_reg_consigna+1;
933:             }
934:
935:             if (input(Pulsmenys)==0 && ok==1){
936:             t_reg_consigna=t_reg_consigna-1;
937:             }
938:          }
```

```
939:          lcd_gotoxy(1,2);
940:          printf(lcd_putc, "Reg ON?");
941:          delay_ms(1500);
942:          R=1;
943:          lcd_putc("\f");
944:             if(ok==1){
945:             ok=0;
946:             OUTPUT_HIGH(reg);
947:             lcd_gotoxy(1,2);
948:             printf(lcd_putc, "Regant");
949:             consum_aigua=55*t_reg_consigna;
950:             delay_ms(500);}
951:
952:        lcd_gotoxy(1,2);
953:          printf(lcd_putc, "Reg OFF?");
954:          delay_ms(1500);
955:          lcd_putc("\f");
956:             if(ok==1){
957:             ok=0;
958:             OUTPUT_LOW(reg);
959:             lcd_gotoxy(1,2);
960:             printf(lcd_putc, "Reg apagat");
961:             delay_ms(500);
962:             }
963:          }
964:        }
965:
966:     //--------------------------------Alarmes----------------------------------+-
967:     ////Si es la variable A és 9 es mostra el menú l'opció Alarmes
968:      if (A==9){
969:      lcd_putc("\f");
970:      lcd_gotoxy(1,1);
971:      printf(lcd_putc, "Alarma");
972:      delay_ms(250);
973:
974:      //Si es prem OK entra a l'pció d'Alarmes
975:      //Es pot actuar sobre l'activació i desactivacio de les alarmes.
976:
977:          if(ok==1 && A==9){
978:          ok=0;
979:          lcd_gotoxy(1,2);
980:          printf(lcd_putc, "Desectivar Alarmes?");
981:          delay_ms(1500);
982:          lcd_putc("\f");
983:             if(ok==1){
984:             ok=0;
985:             alarmes=0;
986:             lcd_gotoxy(1,2);
987:             printf(lcd_putc, "Al. Desactivades");
988:             }
989:
990:          lcd_gotoxy(1,2);
991:          printf(lcd_putc, "Activar Alarmes?");
992:          delay_ms(1500);
993:          lcd_putc("\f");
994:             if(ok==1){
995:             ok=0;
996:             alarmes=1;
997:             //falta on activarla fet
998:             lcd_gotoxy(1,2);
999:             printf(lcd_putc, "Al. Activades");
1000:            delay_ms(500);}
1001:            }
1002:            }
1003:   //---------------------Alarmes auto-----------------------------------------
1004:       //Funcionament de les alarmes en automàtic
1005:
```

```
1006:          if(variable_gas==1 && alarmes==1){
1007:           lcd_gotoxy(1,2);
1008:           printf(lcd_putc, "Alarm. Gas Activa");
1009:           output_high(alarma);
1010:           delay_ms(1500);
1011:           lcd_putc("\f"); }
1012:
1013:           if(alarmes==0){
1014:           output_low(alarma);
1015:           }
1016:
1017:           if(escena_foracasa==1 && variable_pir==1 && alarmes==1){
1018:           lcd_gotoxy(1,2);
1019:           printf(lcd_putc, "Alarm.intrus");
1020:           output_high(alarma);
1021:           delay_ms(1500);
1022:           lcd_putc("\f");
1023:
1024:           }
1025:           if(escena_foracasa==1 && variable_fc==1 && variable_pir==1 && alarmes==1
1026:           lcd_gotoxy(1,2);
1027:           printf(lcd_putc, "Al.intrus fc pir");
1028:           delay_ms(1500);
1029:           lcd_putc("\f");
1030:           }
1031:
1032:  //------------------------Escenes---------------------------------------------
1033:     //Si es la variable A és 10 es mostra el menú l'opció electrodomèstics
1034:      if (A==10){
1035:      lcd_putc("\f");
1036:      lcd_gotoxy(1,1);
1037:      printf(lcd_putc, "Escenes");
1038:      delay_ms(250);
1039:      lcd_putc("\f");
1040:
1041:      //si es prem OK entra en l'opció d'Escenes
1042:      //Es pot actuar sobre la activació i desactivació de les escenes i
1043:      //viasualitzar-ne l'estat
1044:
1045:          if(ok==1 && A==10){
1046:          ok=0;
1047:          if (escena_foracasa==1){
1048:          lcd_gotoxy(1,2);
1049:          printf(lcd_putc, "Fora de casa ON");
1050:          delay_ms(1500);
1051:           lcd_putc("\f");
1052:          }
1053:          else {
1054:          lcd_gotoxy(1,2);
1055:          printf(lcd_putc, "Fora de casa OFF");
1056:          delay_ms(1500);
1057:           lcd_putc("\f");
1058:          }
1059:
1060:          if (escena_dormir==1){
1061:          lcd_gotoxy(1,2);
1062:          printf(lcd_putc, "Dormir ON");
1063:          delay_ms(1500);
1064:           lcd_putc("\f");
1065:          }
1066:          else {
1067:          lcd_gotoxy(1,2);
1068:          printf(lcd_putc, "Dormir OFF");
1069:          delay_ms(1500);
1070:           lcd_putc("\f");
1071:          }
1072:
```

```c
        if (escena_hivern==1){
        lcd_gotoxy(1,2);
        printf(lcd_putc, "Hivern ON");
        delay_ms(1500);
         lcd_putc("\f");
        }
        else {
        lcd_gotoxy(1,2);
        printf(lcd_putc, "Hivern OFF");
        delay_ms(1500);
         lcd_putc("\f");
        }

        if (escena_estiu==1){
        lcd_gotoxy(1,2);
        printf(lcd_putc, "Estiu ON");
        delay_ms(1500);
         lcd_putc("\f");
        }
        else {
        lcd_gotoxy(1,2);
        printf(lcd_putc, "Estiu OFF");
        delay_ms(1500);
         lcd_putc("\f");
        }

        lcd_gotoxy(1,2);
        printf(lcd_putc, "Dormir ON?");
        delay_ms(1500);
        lcd_putc("\f");
           if(ok==1){
           ok=0;
           escena_dormir=1;
           lcd_gotoxy(1,2);
           printf(lcd_putc, "Dormir activat");
           delay_ms(500);
           lcd_putc("\f");}

        lcd_gotoxy(1,2);
        printf(lcd_putc, "Fora de casa ON?");
        delay_ms(1500);
        lcd_putc("\f");
           if(ok==1){
           ok=0;
           escena_foracasa=1;
           lcd_gotoxy(1,2);
           printf(lcd_putc, "Fora.Casa activat");
           delay_ms(500);
           lcd_putc("\f");}

        lcd_gotoxy(1,2);
        printf(lcd_putc, "Hivern ON?");
        delay_ms(1500);
        lcd_putc("\f");
           if(ok==1){
           ok=0;
           escena_hivern=1;
           lcd_gotoxy(1,2);
           printf(lcd_putc, "Hivern activat");
           delay_ms(500);
           lcd_putc("\f");}

        lcd_gotoxy(1,2);
        printf(lcd_putc, "Estiu ON?");
        delay_ms(1500);
        lcd_putc("\f");
           if(ok==1){
```

```
1140:            ok=0;
1141:            escena_estiu=1;
1142:            lcd_gotoxy(1,2);
1143:            printf(lcd_putc, "Estiu activat");
1144:            delay_ms(500);
1145:            lcd_putc("\f");}
1146:
1147:         lcd_gotoxy(1,2);
1148:         printf(lcd_putc, "Dormir OFF?");
1149:         delay_ms(1500);
1150:         lcd_putc("\f");
1151:            if(ok==1){
1152:            ok=0;
1153:            escena_dormir=0;
1154:            lcd_gotoxy(1,2);
1155:            printf(lcd_putc, "Dormir desactivat");
1156:            delay_ms(500);
1157:            lcd_putc("\f");}
1158:
1159:         lcd_gotoxy(1,2);
1160:         printf(lcd_putc, "Fora.Casa OFF?");
1161:         delay_ms(1500);
1162:         lcd_putc("\f");
1163:            if(ok==1){
1164:            ok=0;
1165:            escena_foracasa=0;
1166:            lcd_gotoxy(1,2);
1167:            printf(lcd_putc, "Fora.Casa desactivat");
1168:            delay_ms(500);
1169:            lcd_putc("\f");}
1170:
1171:         lcd_gotoxy(1,2);
1172:         printf(lcd_putc, "Hivern OFF?");
1173:         delay_ms(1500);
1174:         lcd_putc("\f");
1175:            if(ok==1){
1176:            ok=0;
1177:            escena_hivern=0;
1178:            lcd_gotoxy(1,2);
1179:            printf(lcd_putc, "Hivern desactivat");
1180:            delay_ms(500);
1181:            lcd_putc("\f");}
1182:
1183:         lcd_gotoxy(1,2);
1184:         printf(lcd_putc, "Estiu OFF?");
1185:         delay_ms(1500);
1186:         lcd_putc("\f");
1187:            if(ok==1){
1188:            ok=0;
1189:            escena_estiu=0;
1190:            lcd_gotoxy(1,2);
1191:            printf(lcd_putc, "Estiu desactivat");
1192:            delay_ms(500);
1193:            lcd_putc("\f");}
1194:
1195:      }
1196:      }
1197:
1198:
1199: //---------------------------Apagar reg -------------------------------------
1200:       //Programa per apagar el reg quan arribi al temps de la consigna
1201:
1202:       if(R==1){
1203:       t_regant=t_regant+1;
1204:       if (t_regant==t_reg_consigna*6000){
1205:       OUTPUT_LOW(reg);
1206:       R=0;
```

```
1207:        }
1208:       }
1209:
1210: //---------------------Funcionament de les persianes auto----------------------
1211: if (persiana_up==1){
1212:      persiana_down=0;
1213:      lcd_gotoxy(1,2);
1214:      printf(lcd_putc,"Persiana Up");
1215:      //Posem a 1 els ports de PCF8574, Pujar persianes
1216:      persiana_down=0;
1217:      adressa=0x44;
1218:      valor_env=0b11111111;
1219:      transmisio_i2c();
1220:      delay_ms(1600);
1221:
1222:      //Apago els ports de PCF8574, stop persianes
1223:      adressa=0x44;
1224:      valor_env=0b00000000;
1225:      transmisio_i2c();
1226:      delay_ms(1600);
1227:      lcd_putc("\f");
1228:      persiana_up=0;
1229: }
1230: if (persiana_down==1){
1231:      persiana_up=0;
1232:      lcd_gotoxy(1,2);
1233:      //Posem a 1 els ports de PCF8574, Pujar persianes
1234:      printf(lcd_putc,"Persiana Down");
1235:      adressa=0x46;
1236:      valor_env=0b11111111;
1237:      transmisio_i2c();
1238:      delay_ms(1600);
1239:
1240:      //Apago els ports de PCF8574, stop persianes
1241:      adressa=0x46;
1242:      valor_env=0b00000000;
1243:      transmisio_i2c();
1244:      lcd_putc("\f");
1245:      persiana_down=0;
1246: }
1247: //--------------------------Automatic reg-------------------------------------
1248: // Hora del rellotge igual a l'hora de la consigna d'encesa del reg, s'encent.
1249: if  (variable_pluja==0 && hora_reg==hrs){
1250:      R=1;
1251:      output_high(reg);
1252: }
1253:
1254:    }
1255: }
```

2. PROGRAMACIÓ APLICACCIÓ MOBIL

2.1. Pantalla principal

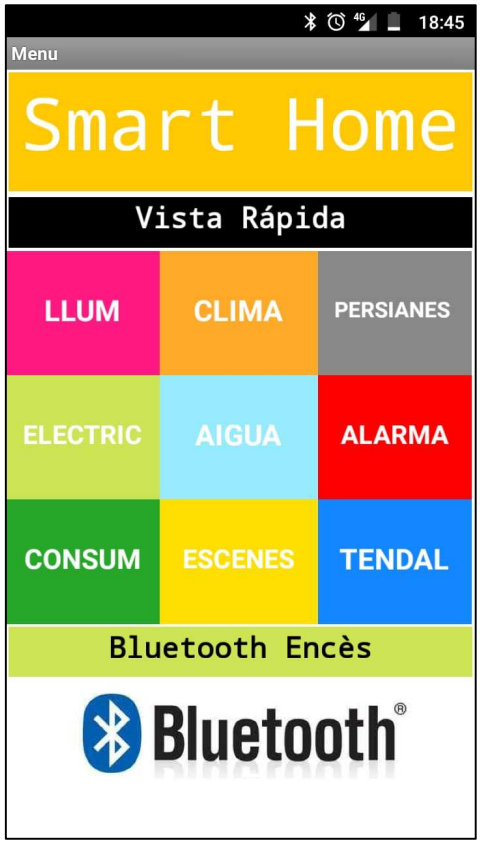

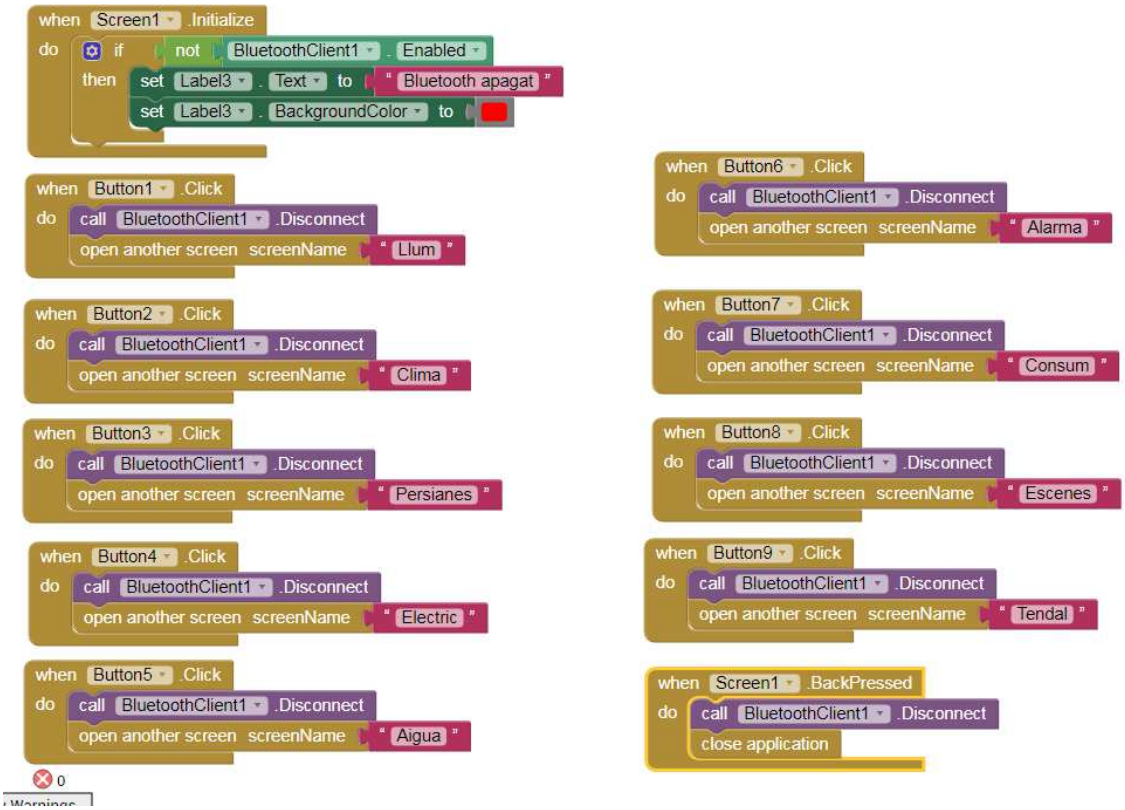

2.2. Control llums

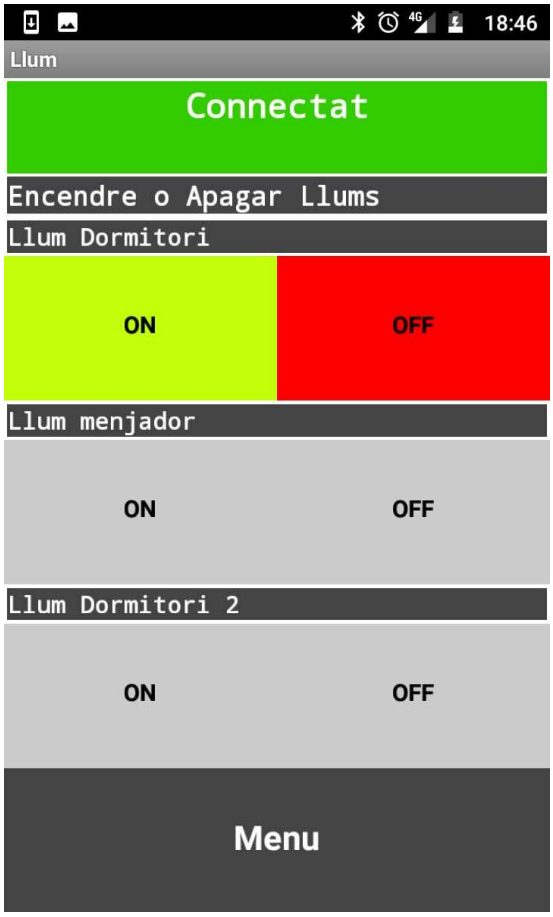

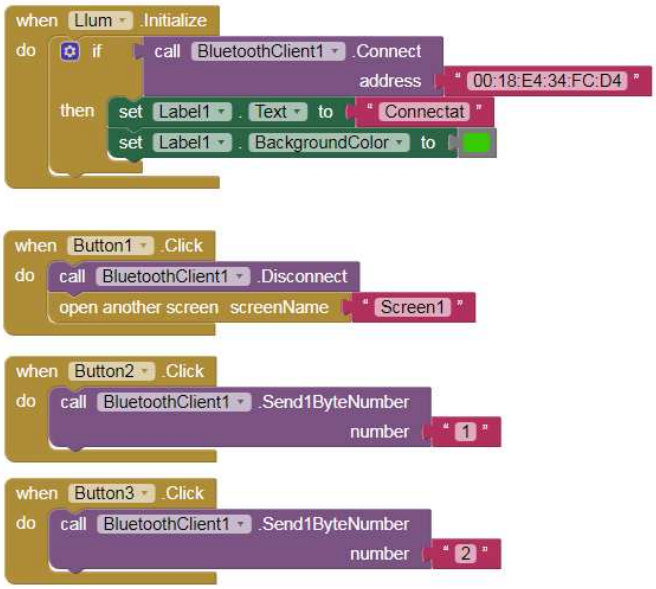

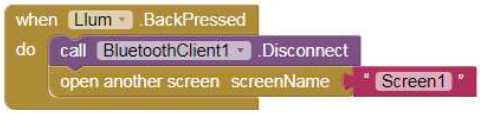

2.3. Control Clima

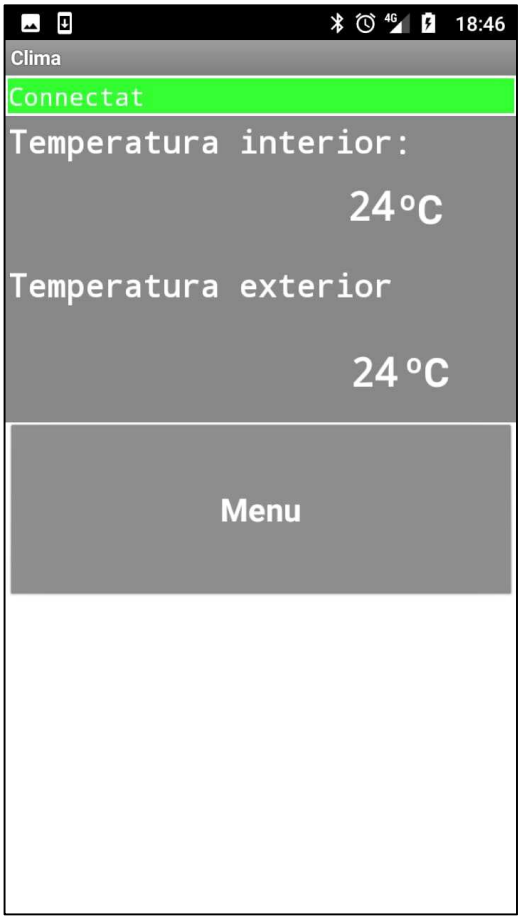

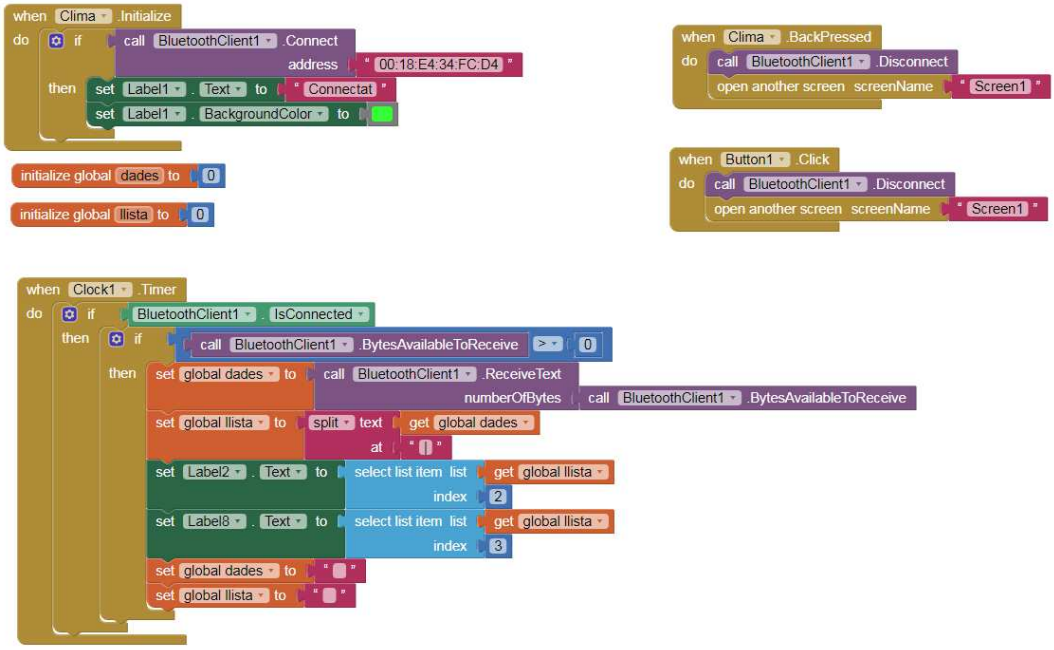

2.4. Control Persianes

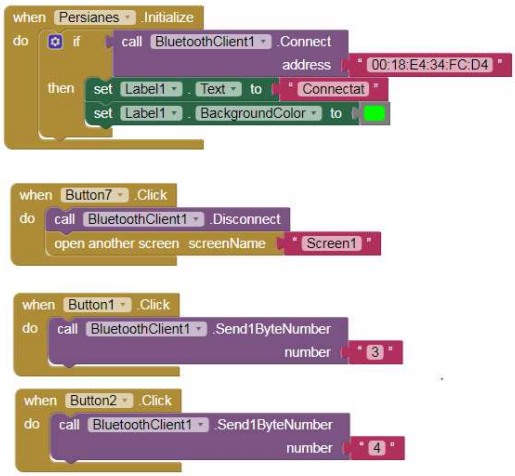

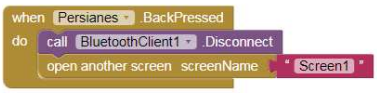

2.5. Control Aigua del Reg

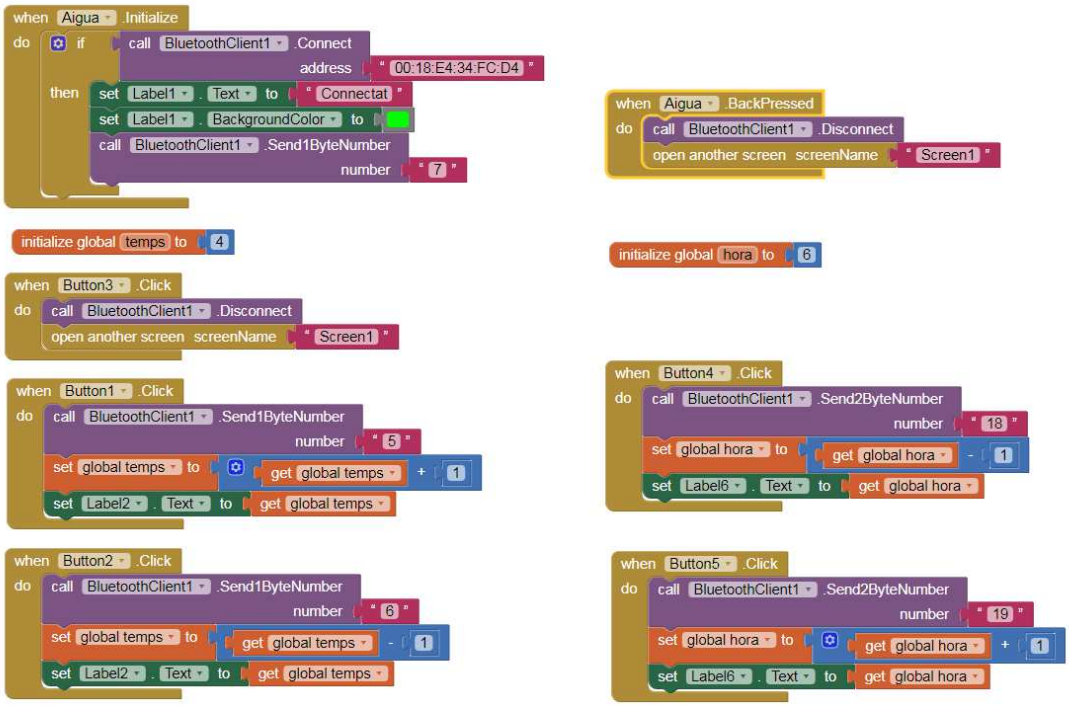

2.6. Control Alarma

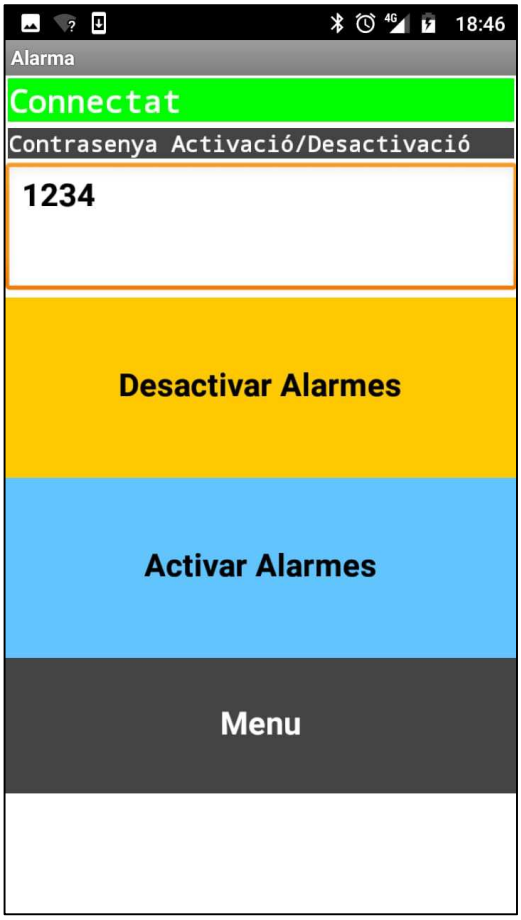

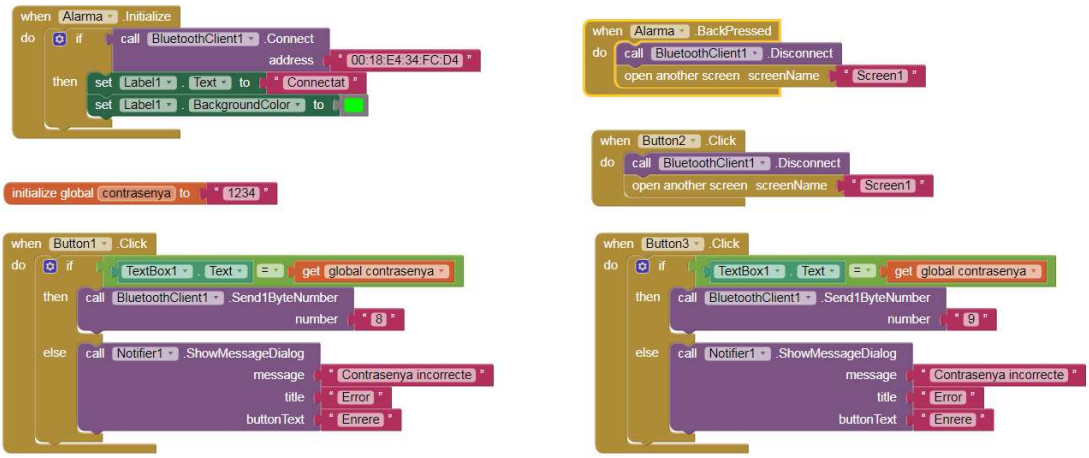

2.7. Escenes

18:47
Escenes
Connectat
Escena Dormir
ON
OFF
Escena Fora de casa
ON
OFF
Escena Hivern
ON
OFF
Escena Estiu
ON
OFF
Menu

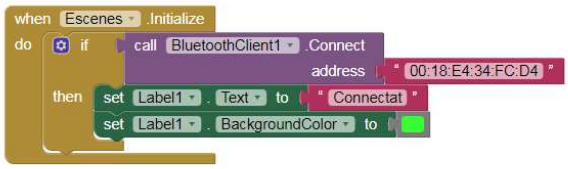
when Escenes .Initialize
do if call BluetoothClient1 .Connect
address " 00:18:E4:34:FC:D4 "
then set Label1 . Text to " Connectat "
set Label1 . BackgroundColor to

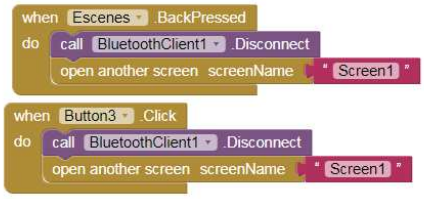
when Escenes .BackPressed
do call BluetoothClient1 .Disconnect
open another screen screenName " Screen1 "
when Button3 .Click
do call BluetoothClient1 .Disconnect
open another screen screenName " Screen1 "

when Button1 .Click
do call BluetoothClient1 .Send1ByteNumber
number " 10 "

when Button2 .Click
do call BluetoothClient1 .Send1ByteNumber
number " 11 "

when Button4 .Click
do call BluetoothClient1 .Send1ByteNumber
number " 12 "

when Button5 .Click
do call BluetoothClient1 .Send1ByteNumber
number " 13 "

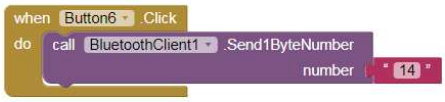
when Button6 .Click
do call BluetoothClient1 .Send1ByteNumber
number " 14 "

when Button7 .Click
do call BluetoothClient1 .Send2ByteNumber
number " 15 "

when Button8 .Click
do call BluetoothClient1 .Send2ByteNumber
number " 16 "

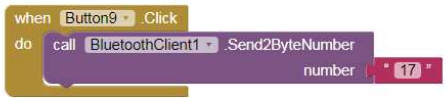
when Button9 .Click
do call BluetoothClient1 .Send2ByteNumber
number " 17 "

3. GRAU D'AUTOMATITZACIÓ SEGONS CEDOM

L'associació espanyola de domòtica e inmòtica ofereix una taula d'avaluació del grau de domotització de les instal·lacions domòtiques dels habitatges. Es basa en criteris tècnics dels experts en aquest àmbit. Un sistema es considera domòtic si assoleix el Nivell 1.

Aquesta eina es basa en l'Informe de AENOR UNE-CLC/TR 50491-6-3 IN *"Requisitos generales para sistemas electrónicos para viviendas y edificios (HBES) y sistemas de automatización y control de edificios (BACS). Parte 6-3: Instalaciones HBES. Evaluación y definición de niveles".* Que anul·la i substitueix a l'Especificació Técnica de AENOR EA 0026 *"Instalaciones de sistemas domóticos en viviendas. Prescripciones generales de instalación y evaluación"*. CEDOM va participar activament en el desenvolupament de la EA 0026, que va preparar el CTN202/SC205 "*Sistemas electrónicos en viviendas y edificios"* i es va publicar el 2006.
Per tal de valorar el grau de domotització del dispositiu electrònic dissenyat s'ha realitzat el test amb els seus paràmetres. I s'ha obtingut una puntuació de 33 punts que equival a un Nivell 2, o nivell mig d'automatització. Al final del test es troba el significat dels tres nivells que es poden obtenir.

Tabla de Niveles de Domotización

Dispositivos	Nº de dispositivos o condición
Detectores de presencia	○ Ninguno ○ 2 ○ 1 cada 20 m2 ◉ 1 por estancia
Teclado codificado, llave electrónica, o equivalente.	○ Ninguno ◉ 1
Sirena interior	○ No ◉ Si
Contactos de ventana y/o impactos	○ No ○ En puntos de fácil acceso ◉ En todas las ventanas
Sistema de mantenimiento de alimentación en caso de fallo de suministro eléctrico	◉ No ○ Si

Módulo de habla/escucha, destinado a la escucha en caso de alarma* También se admite cualquier tipo de control que permita conocer si realmente existe un intruso (cámaras web...)	(•) No ( ) Si
Sistema conectable con central de alarmas	(•) No ( ) Si
Suma Parcial Alarma de intrusión	8
Detectores de inundación necesarios en zonas húmedas (baños, cocina, lavadero, garaje)	(•) No ( ) Los necesarios [1)]
Electro válvula de corte agua con instalación para "bypass" manual.	(•) No ( ) Las necesarias [1)]
Detectores de concentraciones de gas butano y/o natural en zonas donde se prevea que habrá elementos que funcionen con gas	( ) No (•) Los necesarios [1)]
Electro válvula de corte gas con instalación para "bypass" manual	(•) No ( ) Las necesarias[1)]
Detector de incendios	( ) No (•) 1 en cocina. ( ) 1 cada 30 m2 ( ) En todas las estancias
Suma Parcial Alarmas técnicas	2
Simulación de presencia	(•) No ( ) Relacionada con las persianas motorizadas o con puntos de luz. ( ) Relacionada con persianas motorizadas y con puntos de luz
Suma Parcial Simulación de presencia	0

Videoportero	○ No ◉ Si
Suma Parcial Videoportero	1
Control de persianas	○ No ○ Todas las de superficie superior a 2m2 ◉ Todas
Suma Parcial Control de persianas	2
Regulación lumínica con control de escenas	○ No ○ en dependencias dedicadas al ocio ◉ En salón y dormitorios
En jardín o grandes terrazas mediante interruptor crepuscular o interruptor horario astronómico	○ No ◉ Si
Conexión/desconexión general de iluminación	○ No ○ Un acceso ◉ Todos los accesos
Control de puntos de luz y tomas de corriente más significativas	○ No ○ 50% puntos luz ◉ 80% puntos luz + 20% tomas corriente
Suma Parcial Control de iluminación	10
Cronotermostato	○ No ◉ 1 en salón ○ zonificando la vivienda en un mínimo de dos zonas ○ Varios cronotermostatos, zonificando la vivienda por estancias
Suma Parcial Control de clima	1

Posibilidad de realizar programaciones horarias sobre los equipos controlados	○ No ◉ Si
Gestor energético	○ No ◉ Si
Suma Parcial Programaciones	4
Consola o equivalente	○ No ◉ Si
Control telefónico bidireccional	◉ No ○ Si ○ Interacción mediante SMS
Equipo para control a través de internet, bluetooth o equivalente	○ No ◉ Si
Suma Parcial Interfaz usuario	5
Dispositivos conectables a empresas suministradoras a través de redes de comunicación	◉ 0 ○ 1 ○ 2 ○ 3 o más
Suma Parcial Dispositivos conectables a empresas suministradoras	0
Tomas SAT y Tomas Multimedia	◉ No ○ 3 tomas satélite + 3 tomas multimedia ○ 3 tomas satélite +1 toma multimedia en todas las estancias, incluido terraza
Punto de acceso inalámbrico	◉ No ○ Wi-Fi
Suma Parcial Red Multimedia	0
SUMA TOTAL	33

Nivel 1. Son instalaciones con un nivel mínimo de dispositivos y/o aplicaciones domóticas. La suma de los pesos ponderados de los dispositivos incluidos en la instalación domótica debe ser como mínimo de 13, siempre que a su vez cubra al menos 3 aplicaciones domóticas. Es decir, estos 13 puntos deben conseguirse con dispositivos repartidos entre, al menos, 3 aplicaciones distintas que se distinguen por tener diferente color en la tabla. No conseguiría el nivel mínimo de domotización una instalación que alcanza una puntuación de 13 pero que sólo tiene instalados dispositivos de climatización y de control de persianas; necesitaría tener dispositivos instalados en una tercera aplicación como puede ser el videoportero.

Nivel 2. Son instalaciones con un nivel medio de dispositivos y/o aplicaciones domóticas. En este caso la suma de puntos debe ser de 30 como mínimo, siempre que se cubran al menos 3 aplicaciones.

Nivel 3. Son instalaciones con un nivel alto de dispositivos y/o aplicaciones domóticas. En este caso la suma de puntos debe ser de 45 como mínimo, siempre que se repartan en al menos 6 aplicaciones.

4. DATASHEETS DELS COMPONENTS

4.1. PIC 18F4550

PIC18F2455/2550/4455/4550
Data Sheet

28/40/44-Pin, High-Performance,
Enhanced Flash, USB Microcontrollers
with nanoWatt Technology

© 2009 Microchip Technology Inc.

Note the following details of the code protection feature on Microchip devices:

- Microchip products meet the specification contained in their particular Microchip Data Sheet.
- Microchip believes that its family of products is one of the most secure families of its kind on the market today, when used in the intended manner and under normal conditions.
- There are dishonest and possibly illegal methods used to breach the code protection feature. All of these methods, to our knowledge, require using the Microchip products in a manner outside the operating specifications contained in Microchip's Data Sheets. Most likely, the person doing so is engaged in theft of intellectual property.
- Microchip is willing to work with the customer who is concerned about the integrity of their code.
- Neither Microchip nor any other semiconductor manufacturer can guarantee the security of their code. Code protection does not mean that we are guaranteeing the product as "unbreakable."

Code protection is constantly evolving. We at Microchip are committed to continuously improving the code protection features of our products. Attempts to break Microchip's code protection feature may be a violation of the Digital Millennium Copyright Act. If such acts allow unauthorized access to your software or other copyrighted work, you may have a right to sue for relief under that Act.

Information contained in this publication regarding device applications and the like is provided only for your convenience and may be superseded by updates. It is your responsibility to ensure that your application meets with your specifications. MICROCHIP MAKES NO REPRESENTATIONS OR WARRANTIES OF ANY KIND WHETHER EXPRESS OR IMPLIED, WRITTEN OR ORAL, STATUTORY OR OTHERWISE, RELATED TO THE INFORMATION, INCLUDING BUT NOT LIMITED TO ITS CONDITION, QUALITY, PERFORMANCE, MERCHANTABILITY OR FITNESS FOR PURPOSE. Microchip disclaims all liability arising from this information and its use. Use of Microchip devices in life support and/or safety applications is entirely at the buyer's risk, and the buyer agrees to defend, indemnify and hold harmless Microchip from any and all damages, claims, suits, or expenses resulting from such use. No licenses are conveyed, implicitly or otherwise, under any Microchip intellectual property rights.

Trademarks

The Microchip name and logo, the Microchip logo, dsPIC, KEELOQ, KEELOQ logo, MPLAB, PIC, PICmicro, PICSTART, rfPIC and UNI/O are registered trademarks of Microchip Technology Incorporated in the U.S.A. and other countries.

FilterLab, Hampshire, HI-TECH C, Linear Active Thermistor, MXDEV, MXLAB, SEEVAL and The Embedded Control Solutions Company are registered trademarks of Microchip Technology Incorporated in the U.S.A.

Analog-for-the-Digital Age, Application Maestro, CodeGuard, dsPICDEM, dsPICDEM.net, dsPICworks, dsSPEAK, ECAN, ECONOMONITOR, FanSense, HI-TIDE, In-Circuit Serial Programming, ICSP, Mindi, MiWi, MPASM, MPLAB Certified logo, MPLIB, MPLINK, mTouch, Octopus, Omniscient Code Generation, PICC, PICC-18, PICDEM, PICDEM.net, PICkit, PICtail, PIC^{32} logo, REAL ICE, rfLAB, Select Mode, Total Endurance, TSHARC, UniWinDriver, WiperLock and ZENA are trademarks of Microchip Technology Incorporated in the U.S.A. and other countries.

SQTP is a service mark of Microchip Technology Incorporated in the U.S.A.

All other trademarks mentioned herein are property of their respective companies.

© 2009, Microchip Technology Incorporated, Printed in the U.S.A., All Rights Reserved.

Printed on recycled paper.

QUALITY MANAGEMENT SYSTEM
CERTIFIED BY DNV
ISO/TS 16949:2002

Microchip received ISO/TS-16949:2002 certification for its worldwide headquarters, design and wafer fabrication facilities in Chandler and Tempe, Arizona; Gresham, Oregon and design centers in California and India. The Company's quality system processes and procedures are for its PIC® MCUs and dsPIC® DSCs, KEELOQ® code hopping devices, Serial EEPROMs, microperipherals, nonvolatile memory and analog products. In addition, Microchip's quality system for the design and manufacture of development systems is ISO 9001:2000 certified.

MICROCHIP

PIC18F2455/2550/4455/4550

28/40/44-Pin, High-Performance, Enhanced Flash, USB Microcontrollers with nanoWatt Technology

Universal Serial Bus Features:

- USB V2.0 Compliant
- Low Speed (1.5 Mb/s) and Full Speed (12 Mb/s)
- Supports Control, Interrupt, Isochronous and Bulk Transfers
- Supports up to 32 Endpoints (16 bidirectional)
- 1 Kbyte Dual Access RAM for USB
- On-Chip USB Transceiver with On-Chip Voltage Regulator
- Interface for Off-Chip USB Transceiver
- Streaming Parallel Port (SPP) for USB streaming transfers (40/44-pin devices only)

Power-Managed Modes:

- Run: CPU on, Peripherals on
- Idle: CPU off, Peripherals on
- Sleep: CPU off, Peripherals off
- Idle mode Currents Down to 5.8 μA Typical
- Sleep mode Currents Down to 0.1 μA Typical
- Timer1 Oscillator: 1.1 μA Typical, 32 kHz, 2V
- Watchdog Timer: 2.1 μA Typical
- Two-Speed Oscillator Start-up

Flexible Oscillator Structure:

- Four Crystal modes, including High-Precision PLL for USB
- Two External Clock modes, Up to 48 MHz
- Internal Oscillator Block:
  - 8 user-selectable frequencies, from 31 kHz to 8 MHz
  - User-tunable to compensate for frequency drift
- Secondary Oscillator using Timer1 @ 32 kHz
- Dual Oscillator Options allow Microcontroller and USB module to Run at Different Clock Speeds
- Fail-Safe Clock Monitor:
  - Allows for safe shutdown if any clock stops

Peripheral Highlights:

- High-Current Sink/Source: 25 mA/25 mA
- Three External Interrupts
- Four Timer modules (Timer0 to Timer3)
- Up to 2 Capture/Compare/PWM (CCP) modules:
  - Capture is 16-bit, max. resolution 5.2 ns (TCY/16)
  - Compare is 16-bit, max. resolution 83.3 ns (TCY)
  - PWM output: PWM resolution is 1 to 10-bit
- Enhanced Capture/Compare/PWM (ECCP) module:
  - Multiple output modes
  - Selectable polarity
  - Programmable dead time
  - Auto-shutdown and auto-restart
- Enhanced USART module:
  - LIN bus support
- Master Synchronous Serial Port (MSSP) module Supporting 3-Wire SPI (all 4 modes) and I^2C™ Master and Slave modes
- 10-Bit, Up to 13-Channel Analog-to-Digital Converter (A/D) module with Programmable Acquisition Time
- Dual Analog Comparators with Input Multiplexing

Special Microcontroller Features:

- C Compiler Optimized Architecture with Optional Extended Instruction Set
- 100,000 Erase/Write Cycle Enhanced Flash Program Memory Typical
- 1,000,000 Erase/Write Cycle Data EEPROM Memory Typical
- Flash/Data EEPROM Retention: > 40 Years
- Self-Programmable under Software Control
- Priority Levels for Interrupts
- 8 x 8 Single-Cycle Hardware Multiplier
- Extended Watchdog Timer (WDT):
  - Programmable period from 41 ms to 131s
- Programmable Code Protection
- Single-Supply 5V In-Circuit Serial Programming™ (ICSP™) via Two Pins
- In-Circuit Debug (ICD) via Two Pins
- Optional Dedicated ICD/ICSP Port (44-pin, TQFP package only)
- Wide Operating Voltage Range (2.0V to 5.5V)

Device	Program Memory		Data Memory		I/O	10-Bit A/D (ch)	CCP/ECCP (PWM)	SPP	MSSP		EUSART	Comparators	Timers 8/16-Bit
	Flash (bytes)	# Single-Word Instructions	SRAM (bytes)	EEPROM (bytes)					SPI	Master I^2C™			
PIC18F2455	24K	12288	2048	256	24	10	2/0	No	Y	Y	1	2	1/3
PIC18F2550	32K	16384	2048	256	24	10	2/0	No	Y	Y	1	2	1/3
PIC18F4455	24K	12288	2048	256	35	13	1/1	Yes	Y	Y	1	2	1/3
PIC18F4550	32K	16384	2048	256	35	13	1/1	Yes	Y	Y	1	2	1/3

© 2009 Microchip Technology Inc.

Pin Diagrams

28-Pin PDIP, SOIC

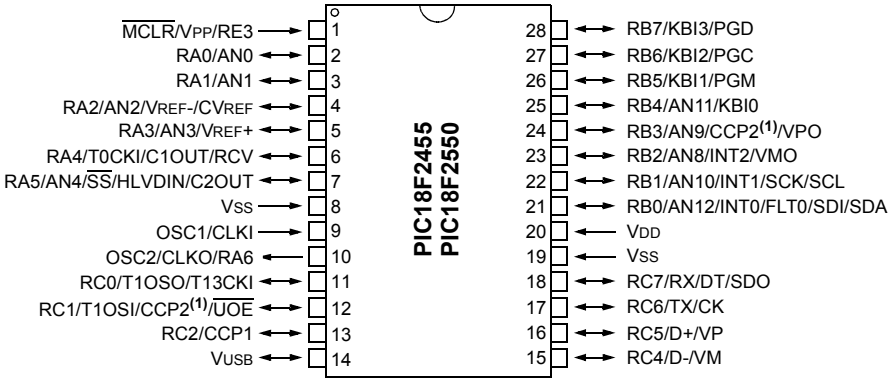

40-Pin PDIP

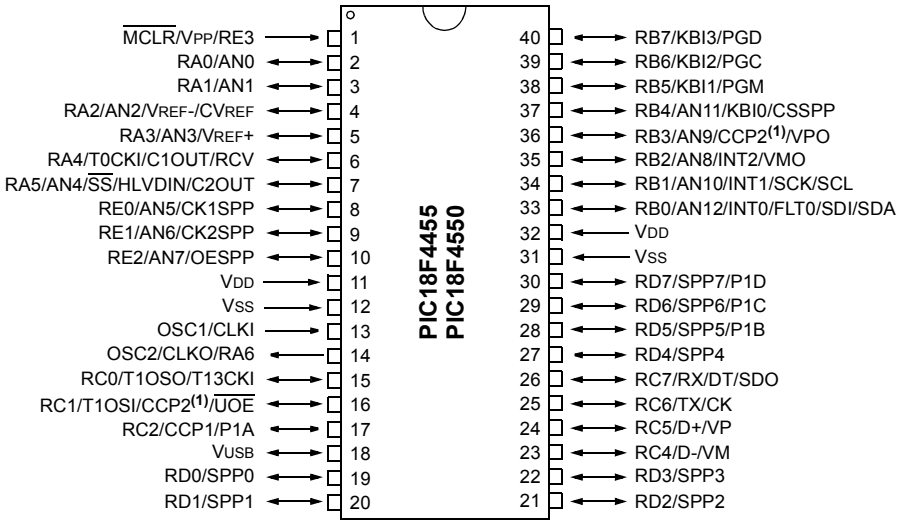

Note 1: RB3 is the alternate pin for CCP2 multiplexing.

© 2009 Microchip Technology Inc.

1.0 DEVICE OVERVIEW

This document contains device-specific information for the following devices:

- PIC18F2455
- PIC18F2550
- PIC18F4455
- PIC18F4550
- PIC18LF2455
- PIC18LF2550
- PIC18LF4455
- PIC18LF4550

This family of devices offers the advantages of all PIC18 microcontrollers – namely, high computational performance at an economical price – with the addition of high-endurance, Enhanced Flash program memory. In addition to these features, the PIC18F2455/2550/4455/4550 family introduces design enhancements that make these microcontrollers a logical choice for many high-performance, power sensitive applications.

1.1 New Core Features

1.1.1 nanoWatt TECHNOLOGY

All of the devices in the PIC18F2455/2550/4455/4550 family incorporate a range of features that can significantly reduce power consumption during operation. Key items include:

- **Alternate Run Modes:** By clocking the controller from the Timer1 source or the internal oscillator block, power consumption during code execution can be reduced by as much as 90%.
- **Multiple Idle Modes:** The controller can also run with its CPU core disabled but the peripherals still active. In these states, power consumption can be reduced even further, to as little as 4%, of normal operation requirements.
- **On-the-Fly Mode Switching:** The power-managed modes are invoked by user code during operation, allowing the user to incorporate power-saving ideas into their application's software design.
- **Low Consumption in Key Modules:** The power requirements for both Timer1 and the Watchdog Timer are minimized. See **Section 28.0 "Electrical Characteristics"** for values.

1.1.2 UNIVERSAL SERIAL BUS (USB)

Devices in the PIC18F2455/2550/4455/4550 family incorporate a fully featured Universal Serial Bus communications module that is compliant with the USB Specification Revision 2.0. The module supports both low-speed and full-speed communication for all supported data transfer types. It also incorporates its own on-chip transceiver and 3.3V regulator and supports the use of external transceivers and voltage regulators.

1.1.3 MULTIPLE OSCILLATOR OPTIONS AND FEATURES

All of the devices in the PIC18F2455/2550/4455/4550 family offer twelve different oscillator options, allowing users a wide range of choices in developing application hardware. These include:

- Four Crystal modes using crystals or ceramic resonators.
- Four External Clock modes, offering the option of using two pins (oscillator input and a divide-by-4 clock output) or one pin (oscillator input, with the second pin reassigned as general I/O).
- An internal oscillator block which provides an 8 MHz clock (±2% accuracy) and an INTRC source (approximately 31 kHz, stable over temperature and V_{DD}), as well as a range of 6 user-selectable clock frequencies, between 125 kHz to 4 MHz, for a total of 8 clock frequencies. This option frees an oscillator pin for use as an additional general purpose I/O.
- A Phase Lock Loop (PLL) frequency multiplier, available to both the High-Speed Crystal and External Oscillator modes, which allows a wide range of clock speeds from 4 MHz to 48 MHz.
- Asynchronous dual clock operation, allowing the USB module to run from a high-frequency oscillator while the rest of the microcontroller is clocked from an internal low-power oscillator.

Besides its availability as a clock source, the internal oscillator block provides a stable reference source that gives the family additional features for robust operation:

- **Fail-Safe Clock Monitor:** This option constantly monitors the main clock source against a reference signal provided by the internal oscillator. If a clock failure occurs, the controller is switched to the internal oscillator block, allowing for continued low-speed operation or a safe application shutdown.
- **Two-Speed Start-up:** This option allows the internal oscillator to serve as the clock source from Power-on Reset, or wake-up from Sleep mode, until the primary clock source is available.

TABLE 1-2: PIC18F2455/2550 PINOUT I/O DESCRIPTIONS

Pin Name	Pin Number PDIP, SOIC	Pin Type	Buffer Type	Description
$\overline{MCLR}$/VPP/RE3	1			Master Clear (input) or programming voltage (input).
$\overline{MCLR}$		I	ST	Master Clear (Reset) input. This pin is an active-low Reset to the device.
VPP		P		Programming voltage input.
RE3		I	ST	Digital input.
OSC1/CLKI	9			Oscillator crystal or external clock input.
OSC1		I	Analog	Oscillator crystal input or external clock source input.
CLKI		I	Analog	External clock source input. Always associated with pin function OSC1. (See OSC2/CLKO pin.)
OSC2/CLKO/RA6	10			Oscillator crystal or clock output.
OSC2		O	—	Oscillator crystal output. Connects to crystal or resonator in Crystal Oscillator mode.
CLKO		O	—	In select modes, OSC2 pin outputs CLKO which has 1/4 the frequency of OSC1 and denotes the instruction cycle rate.
RA6		I/O	TTL	General purpose I/O pin.

Legend: TTL = TTL compatible input; CMOS = CMOS compatible input or output; ST = Schmitt Trigger input with CMOS levels; I = Input; O = Output; P = Power

Note 1: Alternate assignment for CCP2 when CCP2MX Configuration bit is cleared.

2: Default assignment for CCP2 when CCP2MX Configuration bit is set.

© 2009 Microchip Technology Inc.

TABLE 1-2: PIC18F2455/2550 PINOUT I/O DESCRIPTIONS (CONTINUED)

Pin Name	Pin Number PDIP, SOIC	Pin Type	Buffer Type	Description
				PORTA is a bidirectional I/O port.
RA0/AN0	2			
RA0		I/O	TTL	Digital I/O.
AN0		I	Analog	Analog input 0.
RA1/AN1	3			
RA1		I/O	TTL	Digital I/O.
AN1		I	Analog	Analog input 1.
RA2/AN2/VREF-/CVREF	4			
RA2		I/O	TTL	Digital I/O.
AN2		I	Analog	Analog input 2.
VREF-		I	Analog	A/D reference voltage (low) input.
CVREF		O	Analog	Analog comparator reference output.
RA3/AN3/VREF+	5			
RA3		I/O	TTL	Digital I/O.
AN3		I	Analog	Analog input 3.
VREF+		I	Analog	A/D reference voltage (high) input.
RA4/T0CKI/C1OUT/RCV	6			
RA4		I/O	ST	Digital I/O.
T0CKI		I	ST	Timer0 external clock input.
C1OUT		O	—	Comparator 1 output.
RCV		I	TTL	External USB transceiver RCV input.
RA5/AN4/$\overline{SS}$/HLVDIN/C2OUT	7			
RA5		I/O	TTL	Digital I/O.
AN4		I	Analog	Analog input 4.
$\overline{SS}$		I	TTL	SPI slave select input.
HLVDIN		I	Analog	High/Low-Voltage Detect input.
C2OUT		O	—	Comparator 2 output.
RA6	—	—	—	See the OSC2/CLKO/RA6 pin.

Legend: TTL = TTL compatible input; CMOS = CMOS compatible input or output; ST = Schmitt Trigger input with CMOS levels; I = Input; O = Output; P = Power

Note 1: Alternate assignment for CCP2 when CCP2MX Configuration bit is cleared.

2: Default assignment for CCP2 when CCP2MX Configuration bit is set.

TABLE 1-2: PIC18F2455/2550 PINOUT I/O DESCRIPTIONS (CONTINUED)

Pin Name	Pin Number PDIP, SOIC	Pin Type	Buffer Type	Description
				PORTB is a bidirectional I/O port. PORTB can be software programmed for internal weak pull-ups on all inputs.
RB0/AN12/INT0/FLT0/SDI/SDA	21			
RB0		I/O	TTL	Digital I/O.
AN12		I	Analog	Analog input 12.
INT0		I	ST	External interrupt 0.
FLT0		I	ST	PWM Fault input (CCP1 module).
SDI		I	ST	SPI data in.
SDA		I/O	ST	I^2C™ data I/O.
RB1/AN10/INT1/SCK/SCL	22			
RB1		I/O	TTL	Digital I/O.
AN10		I	Analog	Analog input 10.
INT1		I	ST	External interrupt 1.
SCK		I/O	ST	Synchronous serial clock input/output for SPI mode.
SCL		I/O	ST	Synchronous serial clock input/output for I^2C mode.
RB2/AN8/INT2/VMO	23			
RB2		I/O	TTL	Digital I/O.
AN8		I	Analog	Analog input 8.
INT2		I	ST	External interrupt 2.
VMO		O	—	External USB transceiver VMO output.
RB3/AN9/CCP2/VPO	24			
RB3		I/O	TTL	Digital I/O.
AN9		I	Analog	Analog input 9.
CCP2(1)		I/O	ST	Capture 2 input/Compare 2 output/PWM2 output.
VPO		O	—	External USB transceiver VPO output.
RB4/AN11/KBI0	25			
RB4		I/O	TTL	Digital I/O.
AN11		I	Analog	Analog input 11.
KBI0		I	TTL	Interrupt-on-change pin.
RB5/KBI1/PGM	26			
RB5		I/O	TTL	Digital I/O.
KBI1		I	TTL	Interrupt-on-change pin.
PGM		I/O	ST	Low-Voltage ICSP™ Programming enable pin.
RB6/KBI2/PGC	27			
RB6		I/O	TTL	Digital I/O.
KBI2		I	TTL	Interrupt-on-change pin.
PGC		I/O	ST	In-Circuit Debugger and ICSP programming clock pin.
RB7/KBI3/PGD	28			
RB7		I/O	TTL	Digital I/O.
KBI3		I	TTL	Interrupt-on-change pin.
PGD		I/O	ST	In-Circuit Debugger and ICSP programming data pin.

Legend: TTL = TTL compatible input; CMOS = CMOS compatible input or output; ST = Schmitt Trigger input with CMOS levels; I = Input; O = Output; P = Power

Note 1: Alternate assignment for CCP2 when CCP2MX Configuration bit is cleared.

2: Default assignment for CCP2 when CCP2MX Configuration bit is set.

© 2009 Microchip Technology Inc.

TABLE 1-2: PIC18F2455/2550 PINOUT I/O DESCRIPTIONS (CONTINUED)

Pin Name	Pin Number PDIP, SOIC	Pin Type	Buffer Type	Description
				PORTC is a bidirectional I/O port.
RC0/T1OSO/T13CKI	11			
RC0		I/O	ST	Digital I/O.
T1OSO		O	—	Timer1 oscillator output.
T13CKI		I	ST	Timer1/Timer3 external clock input.
RC1/T1OSI/CCP2/$\overline{UOE}$	12			
RC1		I/O	ST	Digital I/O.
T1OSI		I	CMOS	Timer1 oscillator input.
CCP2(2)		I/O	ST	Capture 2 input/Compare 2 output/PWM2 output.
$\overline{UOE}$		O	—	External USB transceiver $\overline{OE}$ output.
RC2/CCP1	13			
RC2		I/O	ST	Digital I/O.
CCP1		I/O	ST	Capture 1 input/Compare 1 output/PWM1 output.
RC4/D-/VM	15			
RC4		I	TTL	Digital input.
D-		I/O	—	USB differential minus line (input/output).
VM		I	TTL	External USB transceiver VM input.
RC5/D+/VP	16			
RC5		I	TTL	Digital input.
D+		I/O	—	USB differential plus line (input/output).
VP		O	TTL	External USB transceiver VP input.
RC6/TX/CK	17			
RC6		I/O	ST	Digital I/O.
TX		O	—	EUSART asynchronous transmit.
CK		I/O	ST	EUSART synchronous clock (see RX/DT).
RC7/RX/DT/SDO	18			
RC7		I/O	ST	Digital I/O.
RX		I	ST	EUSART asynchronous receive.
DT		I/O	ST	EUSART synchronous data (see TX/CK).
SDO		O	—	SPI data out.
RE3	—	—	—	See $\overline{MCLR}$/VPP/RE3 pin.
VUSB	14	P	—	Internal USB 3.3V voltage regulator output, positive supply for internal USB transceiver.
VSS	8, 19	P	—	Ground reference for logic and I/O pins.
VDD	20	P	—	Positive supply for logic and I/O pins.

Legend: TTL = TTL compatible input; CMOS = CMOS compatible input or output; ST = Schmitt Trigger input with CMOS levels; I = Input; O = Output; P = Power

Note 1: Alternate assignment for CCP2 when CCP2MX Configuration bit is cleared.

2: Default assignment for CCP2 when CCP2MX Configuration bit is set.

TABLE 1-3: PIC18F4455/4550 PINOUT I/O DESCRIPTIONS

Pin Name	Pin Number			Pin Type	Buffer Type	Description
	PDIP	QFN	TQFP			
$\overline{\text{MCLR}}$/VPP/RE3	1	18	18			Master Clear (input) or programming voltage (input).
$\overline{\text{MCLR}}$				I	ST	Master Clear (Reset) input. This pin is an active-low Reset to the device.
VPP				P		Programming voltage input.
RE3				I	ST	Digital input.
OSC1/CLKI	13	32	30			Oscillator crystal or external clock input.
OSC1				I	Analog	Oscillator crystal input or external clock source input.
CLKI				I	Analog	External clock source input. Always associated with pin function OSC1. (See OSC2/CLKO pin.)
OSC2/CLKO/RA6	14	33	31			Oscillator crystal or clock output.
OSC2				O	—	Oscillator crystal output. Connects to crystal or resonator in Crystal Oscillator mode.
CLKO				O	—	In RC mode, OSC2 pin outputs CLKO which has 1/4 the frequency of OSC1 and denotes the instruction cycle rate.
RA6				I/O	TTL	General purpose I/O pin.

Legend: TTL = TTL compatible input; CMOS = CMOS compatible input or output; ST = Schmitt Trigger input with CMOS levels; I = Input; O = Output; P = Power

Note 1: Alternate assignment for CCP2 when CCP2MX Configuration bit is cleared.

2: Default assignment for CCP2 when CCP2MX Configuration bit is set.

3: These pins are No Connect unless the ICPRT Configuration bit is set. For NC/ICPORTS, the pin is No Connect unless ICPRT is set and the $\overline{\text{DEBUG}}$ Configuration bit is cleared.

© 2009 Microchip Technology Inc.

TABLE 1-3: PIC18F4455/4550 PINOUT I/O DESCRIPTIONS (CONTINUED)

Pin Name	Pin Number			Pin Type	Buffer Type	Description
	PDIP	QFN	TQFP			
						PORTA is a bidirectional I/O port.
RA0/AN0	2	19	19			
RA0				I/O	TTL	Digital I/O.
AN0				I	Analog	Analog input 0.
RA1/AN1	3	20	20			
RA1				I/O	TTL	Digital I/O.
AN1				I	Analog	Analog input 1.
RA2/AN2/VREF-/CVREF	4	21	21			
RA2				I/O	TTL	Digital I/O.
AN2				I	Analog	Analog input 2.
VREF-				I	Analog	A/D reference voltage (low) input.
CVREF				O	Analog	Analog comparator reference output.
RA3/AN3/VREF+	5	22	22			
RA3				I/O	TTL	Digital I/O.
AN3				I	Analog	Analog input 3.
VREF+				I	Analog	A/D reference voltage (high) input.
RA4/T0CKI/C1OUT/RCV	6	23	23			
RA4				I/O	ST	Digital I/O.
T0CKI				I	ST	Timer0 external clock input.
C1OUT				O	—	Comparator 1 output.
RCV				I	TTL	External USB transceiver RCV input.
RA5/AN4/$\overline{SS}$/HLVDIN/C2OUT	7	24	24			
RA5				I/O	TTL	Digital I/O.
AN4				I	Analog	Analog input 4.
$\overline{SS}$				I	TTL	SPI slave select input.
HLVDIN				I	Analog	High/Low-Voltage Detect input.
C2OUT				O	—	Comparator 2 output.
RA6	—	—	—	—	—	See the OSC2/CLKO/RA6 pin.

Legend: TTL = TTL compatible input; CMOS = CMOS compatible input or output; ST = Schmitt Trigger input with CMOS levels; I = Input; O = Output; P = Power

Note 1: Alternate assignment for CCP2 when CCP2MX Configuration bit is cleared.

2: Default assignment for CCP2 when CCP2MX Configuration bit is set.

3: These pins are No Connect unless the ICPRT Configuration bit is set. For NC/ICPORTS, the pin is No Connect unless ICPRT is set and the $\overline{DEBUG}$ Configuration bit is cleared.

TABLE 1-3: PIC18F4455/4550 PINOUT I/O DESCRIPTIONS (CONTINUED)

Pin Name	Pin Number			Pin Type	Buffer Type	Description
	PDIP	QFN	TQFP			
						PORTB is a bidirectional I/O port. PORTB can be software programmed for internal weak pull-ups on all inputs.
RB0/AN12/INT0/FLT0/SDI/SDA	33	9	8			
RB0				I/O	TTL	Digital I/O.
AN12				I	Analog	Analog input 12.
INT0				I	ST	External interrupt 0.
FLT0				I	ST	Enhanced PWM Fault input (ECCP1 module).
SDI				I	ST	SPI data in.
SDA				I/O	ST	I^2C™ data I/O.
RB1/AN10/INT1/SCK/SCL	34	10	9			
RB1				I/O	TTL	Digital I/O.
AN10				I	Analog	Analog input 10.
INT1				I	ST	External interrupt 1.
SCK				I/O	ST	Synchronous serial clock input/output for SPI mode.
SCL				I/O	ST	Synchronous serial clock input/output for I^2C mode.
RB2/AN8/INT2/VMO	35	11	10			
RB2				I/O	TTL	Digital I/O.
AN8				I	Analog	Analog input 8.
INT2				I	ST	External interrupt 2.
VMO				O	—	External USB transceiver VMO output.
RB3/AN9/CCP2/VPO	36	12	11			
RB3				I/O	TTL	Digital I/O.
AN9				I	Analog	Analog input 9.
CCP2(1)				I/O	ST	Capture 2 input/Compare 2 output/PWM2 output.
VPO				O	—	External USB transceiver VPO output.
RB4/AN11/KBI0/CSSPP	37	14	14			
RB4				I/O	TTL	Digital I/O.
AN11				I	Analog	Analog input 11.
KBI0				I	TTL	Interrupt-on-change pin.
CSSPP				O	—	SPP chip select control output.
RB5/KBI1/PGM	38	15	15			
RB5				I/O	TTL	Digital I/O.
KBI1				I	TTL	Interrupt-on-change pin.
PGM				I/O	ST	Low-Voltage ICSP™ Programming enable pin.
RB6/KBI2/PGC	39	16	16			
RB6				I/O	TTL	Digital I/O.
KBI2				I	TTL	Interrupt-on-change pin.
PGC				I/O	ST	In-Circuit Debugger and ICSP programming clock pin.
RB7/KBI3/PGD	40	17	17			
RB7				I/O	TTL	Digital I/O.
KBI3				I	TTL	Interrupt-on-change pin.
PGD				I/O	ST	In-Circuit Debugger and ICSP programming data pin.

Legend: TTL = TTL compatible input; CMOS = CMOS compatible input or output; ST = Schmitt Trigger input with CMOS levels; I = Input; O = Output; P = Power

Note 1: Alternate assignment for CCP2 when CCP2MX Configuration bit is cleared.

2: Default assignment for CCP2 when CCP2MX Configuration bit is set.

3: These pins are No Connect unless the ICPRT Configuration bit is set. For NC/ICPORTS, the pin is No Connect unless ICPRT is set and the $\overline{\text{DEBUG}}$ Configuration bit is cleared.

© 2009 Microchip Technology Inc.

TABLE 1-3: PIC18F4455/4550 PINOUT I/O DESCRIPTIONS (CONTINUED)

Pin Name	Pin Number			Pin Type	Buffer Type	Description
	PDIP	QFN	TQFP			
						PORTC is a bidirectional I/O port.
RC0/T1OSO/T13CKI	15	34	32			
RC0				I/O	ST	Digital I/O.
T1OSO				O	—	Timer1 oscillator output.
T13CKI				I	ST	Timer1/Timer3 external clock input.
RC1/T1OSI/CCP2/$\overline{\text{UOE}}$	16	35	35			
RC1				I/O	ST	Digital I/O.
T1OSI				I	CMOS	Timer1 oscillator input.
CCP2(2)				I/O	ST	Capture 2 input/Compare 2 output/PWM2 output.
$\overline{\text{UOE}}$				O	—	External USB transceiver $\overline{\text{OE}}$ output.
RC2/CCP1/P1A	17	36	36			
RC2				I/O	ST	Digital I/O.
CCP1				I/O	ST	Capture 1 input/Compare 1 output/PWM1 output.
P1A				O	TTL	Enhanced CCP1 PWM output, channel A.
RC4/D-/VM	23	42	42			
RC4				I	TTL	Digital input.
D-				I/O	—	USB differential minus line (input/output).
VM				I	TTL	External USB transceiver VM input.
RC5/D+/VP	24	43	43			
RC5				I	TTL	Digital input.
D+				I/O	—	USB differential plus line (input/output).
VP				I	TTL	External USB transceiver VP input.
RC6/TX/CK	25	44	44			
RC6				I/O	ST	Digital I/O.
TX				O	—	EUSART asynchronous transmit.
CK				I/O	ST	EUSART synchronous clock (see RX/DT).
RC7/RX/DT/SDO	26	1	1			
RC7				I/O	ST	Digital I/O.
RX				I	ST	EUSART asynchronous receive.
DT				I/O	ST	EUSART synchronous data (see TX/CK).
SDO				O	—	SPI data out.

Legend: TTL = TTL compatible input; CMOS = CMOS compatible input or output; ST = Schmitt Trigger input with CMOS levels; I = Input; O = Output; P = Power

Note 1: Alternate assignment for CCP2 when CCP2MX Configuration bit is cleared.

2: Default assignment for CCP2 when CCP2MX Configuration bit is set.

3: These pins are No Connect unless the $\overline{\text{ICPRT}}$ Configuration bit is set. For NC/ICPORTS, the pin is No Connect unless ICPRT is set and the $\overline{\text{DEBUG}}$ Configuration bit is cleared.

TABLE 1-3: PIC18F4455/4550 PINOUT I/O DESCRIPTIONS (CONTINUED)

Pin Name	Pin Number			Pin Type	Buffer Type	Description
	PDIP	QFN	TQFP			
						PORTD is a bidirectional I/O port or a Streaming Parallel Port (SPP). These pins have TTL input buffers when the SPP module is enabled.
RD0/SPP0	19	38	38			
RD0				I/O	ST	Digital I/O.
SPP0				I/O	TTL	Streaming Parallel Port data.
RD1/SPP1	20	39	39			
RD1				I/O	ST	Digital I/O.
SPP1				I/O	TTL	Streaming Parallel Port data.
RD2/SPP2	21	40	40			
RD2				I/O	ST	Digital I/O.
SPP2				I/O	TTL	Streaming Parallel Port data.
RD3/SPP3	22	41	41			
RD3				I/O	ST	Digital I/O.
SPP3				I/O	TTL	Streaming Parallel Port data.
RD4/SPP4	27	2	2			
RD4				I/O	ST	Digital I/O.
SPP4				I/O	TTL	Streaming Parallel Port data.
RD5/SPP5/P1B	28	3	3			
RD5				I/O	ST	Digital I/O.
SPP5				I/O	TTL	Streaming Parallel Port data.
P1B				O	—	Enhanced CCP1 PWM output, channel B.
RD6/SPP6/P1C	29	4	4			
RD6				I/O	ST	Digital I/O.
SPP6				I/O	TTL	Streaming Parallel Port data.
P1C				O	—	Enhanced CCP1 PWM output, channel C.
RD7/SPP7/P1D	30	5	5			
RD7				I/O	ST	Digital I/O.
SPP7				I/O	TTL	Streaming Parallel Port data.
P1D				O	—	Enhanced CCP1 PWM output, channel D.

Legend: TTL = TTL compatible input; CMOS = CMOS compatible input or output; ST = Schmitt Trigger input with CMOS levels; I = Input; O = Output; P = Power

Note 1: Alternate assignment for CCP2 when CCP2MX Configuration bit is cleared.

2: Default assignment for CCP2 when CCP2MX Configuration bit is set.

3: These pins are No Connect unless the ICPRT Configuration bit is set. For NC/ICPORTS, the pin is No Connect unless ICPRT is set and the $\overline{\text{DEBUG}}$ Configuration bit is cleared.

© 2009 Microchip Technology Inc.

TABLE 1-3: PIC18F4455/4550 PINOUT I/O DESCRIPTIONS (CONTINUED)

Pin Name	Pin Number			Pin Type	Buffer Type	Description
	PDIP	QFN	TQFP			
						PORTE is a bidirectional I/O port.
RE0/AN5/CK1SPP	8	25	25			
RE0				I/O	ST	Digital I/O.
AN5				I	Analog	Analog input 5.
CK1SPP				O	—	SPP clock 1 output.
RE1/AN6/CK2SPP	9	26	26			
RE1				I/O	ST	Digital I/O.
AN6				I	Analog	Analog input 6.
CK2SPP				O	—	SPP clock 2 output.
RE2/AN7/OESPP	10	27	27			
RE2				I/O	ST	Digital I/O.
AN7				I	Analog	Analog input 7.
OESPP				O	—	SPP output enable output.
RE3	—	—	—	—	—	See $\overline{\text{MCLR}}$/VPP/RE3 pin.
VSS	12, 31	6, 30, 31	6, 29	P	—	Ground reference for logic and I/O pins.
VDD	11, 32	7, 8, 28, 29	7, 28	P	—	Positive supply for logic and I/O pins.
VUSB	18	37	37	P	—	Internal USB 3.3V voltage regulator output, positive supply for the USB transceiver.
NC/ICCK/ICPGC(3)	—	—	12			No Connect or dedicated ICD/ICSP™ port clock.
ICCK				I/O	ST	In-Circuit Debugger clock.
ICPGC				I/O	ST	ICSP programming clock.
NC/ICDT/ICPGD(3)	—	—	13			No Connect or dedicated ICD/ICSP port clock.
ICDT				I/O	ST	In-Circuit Debugger data.
ICPGD				I/O	ST	ICSP programming data.
NC/$\overline{\text{ICRST}}$/ICVPP(3)	—	—	33			No Connect or dedicated ICD/ICSP port Reset.
$\overline{\text{ICRST}}$				I	—	Master Clear (Reset) input.
ICVPP				P	—	Programming voltage input.
NC/ICPORTS(3)	—	—	34	P	—	No Connect or 28-pin device emulation.
ICPORTS						Enable 28-pin device emulation when connected to VSS.
NC	—	13	—	—	—	No Connect.

Legend: TTL = TTL compatible input; CMOS = CMOS compatible input or output; ST = Schmitt Trigger input with CMOS levels; I = Input; O = Output; P = Power

Note 1: Alternate assignment for CCP2 when CCP2MX Configuration bit is cleared.

2: Default assignment for CCP2 when CCP2MX Configuration bit is set.

3: These pins are No Connect unless the $\overline{\text{ICPRT}}$ Configuration bit is set. For NC/ICPORTS, the pin is No Connect unless ICPRT is set and the $\overline{\text{DEBUG}}$ Configuration bit is cleared.

3.2. EEPROM 24LC256

24AA256/24LC256/24FC256

256K I²C™ CMOS Serial EEPROM

Device Selection Table

Part Number	Vcc Range	Max. Clock Frequency	Temp. Ranges
24AA256	1.8-5.5V	400 kHz(1)	I
24LC256	2.5-5.5V	400 kHz	I, E
24FC256	1.8-5.5V	1 MHz(2)	I

Note 1: 100 kHz for Vcc < 2.5V.
2: 400 kHz for Vcc < 2.5V.

Features

- Low-power CMOS technology:
  - Maximum write current 3 mA at 5.5V
  - Maximum read current 400 μA at 5.5V
  - Standby current 100 nA typical at 5.5V
- 2-wire serial interface bus, I²C™ compatible
- Cascadable for up to eight devices
- Self-timed erase/write cycle
- 64-byte Page Write mode available
- 5 ms max. write cycle time
- Hardware write-protect for entire array
- Output slope control to eliminate ground bounce
- Schmitt Trigger inputs for noise suppression
- 1,000,000 erase/write cycles
- Electrostatic discharge protection > 4000V
- Data retention > 200 years
- 8-pin PDIP, SOIC, TSSOP, MSOP and DFN packages, 14-lead TSSOP package
- Standard and Pb-free finishes available
- Temperature ranges:
  - Industrial (I): -40°C to +85°C
  - Automotive (E): -40°C to +125°C

Description

The Microchip Technology Inc. 24AA256/24LC256/24FC256 (24XX256*) is a 32K x 8 (256 Kbit) Serial Electrically Erasable PROM, capable of operation across a broad voltage range (1.8V to 5.5V). It has been developed for advanced, low-power applications such as personal communications or data acquisition. This device also has a page write capability of up to 64 bytes of data. This device is capable of both random and sequential reads up to the 256K boundary. Functional address lines allow up to eight devices on the same bus, for up to 2 Mbit address space. This device is available in the standard 8-pin plastic DIP, SOIC, TSSOP, MSOP, DFN and 14-lead TSSOP packages.

Block Diagram

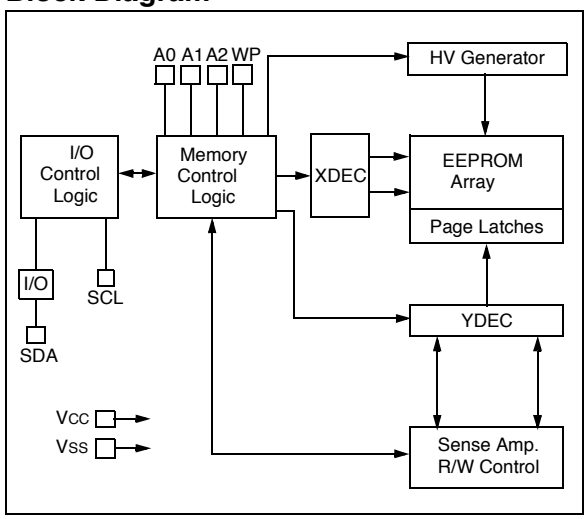

Package Types

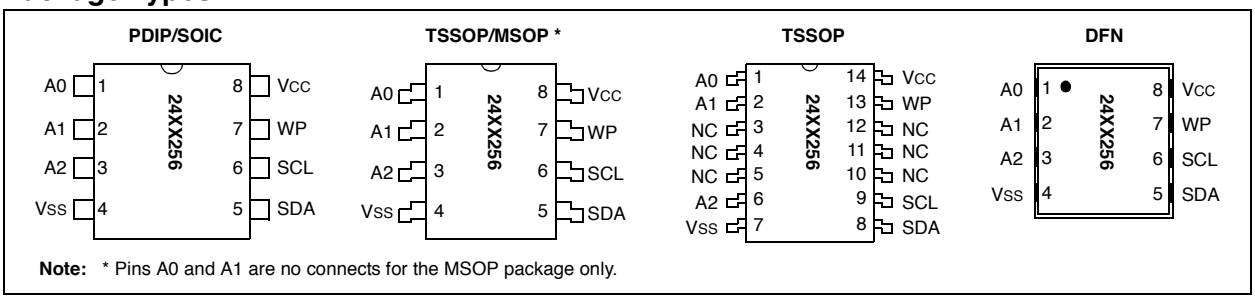

Note: * Pins A0 and A1 are no connects for the MSOP package only.

*24XX256 is used in this document as a generic part number for the 24AA256/24LC256/24FC256 devices.

© 2004 Microchip Technology Inc.

1.0 ELECTRICAL CHARACTERISTICS

Absolute Maximum Ratings(†)

V_{CC} 6.5V

All inputs and outputs w.r.t. V_{SS} ..... -0.6V to V_{CC} +1.0V

Storage temperature ..... -65°C to +150°C

Ambient temperature with power applied ..... -40°C to +125°C

ESD protection on all pins ..... ≥ 4 kV

† NOTICE: Stresses above those listed under “Absolute Maximum Ratings” may cause permanent damage to the device. This is a stress rating only and functional operation of the device at these or any other conditions above those indicated in the operational listings of this specification is not implied. Exposure to Absolute Maximum Rating conditions for extended periods may affect device reliability.

TABLE 1-1: DC CHARACTERISTICS

DC CHARACTERISTICS			Electrical Characteristics: Industrial (I): V_{CC} = +1.8V to 5.5V T_A = -40°C to +85°C Automotive (E): V_{CC} = +2.5V to 5.5V T_A = -40°C to +125°C			
Param. No.	**Sym**	**Characteristic**	**Min**	**Max**	**Units**	**Conditions**
D1	—	A0, A1, A2, SCL, SDA and WP pins:	—	—	—	—
D2	V_{IH}	High-level input voltage	0.7 V_{CC}	—	V	—
D3	V_{IL}	Low-level input voltage	— —	0.3 V_{CC} 0.2 V_{CC}	V V	V_{CC} ≥ 2.5V V_{CC} < 2.5V
D4	V_{HYS}	Hysteresis of Schmitt Trigger inputs (SDA, SCL pins)	0.05 V_{CC}	—	V	V_{CC} ≥ 2.5V **(Note)**
D5	V_{OL}	Low-level output voltage	—	0.40	V	I_{OL} = 3.0 ma @ V_{CC} = 4.5V I_{OL} = 2.1 ma @ V_{CC} = 2.5V
D6	I_{LI}	Input leakage current	—	±1	μA	V_{IN} = V_{SS} or V_{CC}, WP = V_{SS} V_{IN} = V_{SS} or V_{CC}, WP = V_{CC}
D7	I_{LO}	Output leakage current	—	±1	μA	V_{OUT} = V_{SS} or V_{CC}
D8	C_{IN}, C_{OUT}	Pin capacitance (all inputs/outputs)	—	10	pF	V_{CC} = 5.0V **(Note)** T_A = 25°C, f_C = 1 MHz
D9	I_{CC} Read	Operating current	—	400	μA	V_{CC} = 5.5V, SCL = 400 kHz
	I_{CC} Write		—	3	mA	V_{CC} = 5.5V
D10	I_{CCS}	Standby current	— —	1 5	μA μA	T_A = -40°C to +85°C SCL = SDA = V_{CC} = 5.5V A0, A1, A2, WP = V_{SS} T_A = -40°C to +125°C SCL = SDA = V_{CC} = 5.5V A0, A1, A2, WP = V_{SS}

Note: This parameter is periodically sampled and not 100% tested.

© 2004 Microchip Technology Inc.

2.0 PIN DESCRIPTIONS

The descriptions of the pins are listed in Table 2-1.

TABLE 2-1: PIN FUNCTION TABLE

Name	8-pin PDIP	8-pin SOIC	8-pin TSSOP	14-pin TSSOP	8-pin MSOP	8-pin DFN	Function
A0	1	1	1	1	—	1	User Configurable Chip Select
A1	2	2	2	2	—	2	User Configurable Chip Select
(NC)	—	—	—	3, 4, 5	1, 2	—	Not Connected
A2	3	3	3	6	3	3	User Configurable Chip Select
VSS	4	4	4	7	4	4	Ground
SDA	5	5	5	8	5	5	Serial Data
SCL	6	6	6	9	6	6	Serial Clock
(NC)	—	—	—	10, 11, 12	—	—	Not Connected
WP	7	7	7	13	7	7	Write-Protect Input
VCC	8	8	8	14	8	8	+1.8V to 5.5V (24AA256) +2.5V to 5.5V (24LC256) +1.8V to 5.5V (24FC256)

2.1 A0, A1, A2 Chip Address Inputs

The A0, A1 and A2 inputs are used by the 24XX256 for multiple device operations. The levels on these inputs are compared with the corresponding bits in the slave address. The chip is selected if the compare is true.

For the MSOP package only, pins A0 and A1 are not connected.

Up to eight devices (two for the MSOP package) may be connected to the same bus by using different Chip Select bit combinations. If these pins are left unconnected, the inputs will be pulled down internally to VSS. If they are tied to VCC or driven high, the internal pull-down circuitry is disabled.

In most applications, the chip address inputs A0, A1 and A2 are hard-wired to logic '0' or logic '1'. For applications in which these pins are controlled by a microcontroller or other programmable device, the chip address pins must be driven to logic '0' or logic '1' before normal device operation can proceed.

2.2 Serial Data (SDA)

This is a bidirectional pin used to transfer addresses and data into and out of the device. It is an open drain terminal. Therefore, the SDA bus requires a pull-up resistor to VCC (typical 10 kΩ for 100 kHz, 2 kΩ for 400 kHz and 1 MHz).

For normal data transfer, SDA is allowed to change only during SCL low. Changes during SCL high are reserved for indicating the Start and Stop conditions.

2.3 Serial Clock (SCL)

This input is used to synchronize the data transfer to and from the device.

2.4 Write-Protect (WP)

This pin can be connected to either VSS, VCC or left floating. Internal pull-down circuitry on this pin will keep the device in the unprotected state if left floating. If tied to VSS or left floating, normal memory operation is enabled (read/write the entire memory 0000-7FFF).

If tied to VCC, write operations are inhibited. Read operations are not affected.

3.0 FUNCTIONAL DESCRIPTION

The 24XX256 supports a bidirectional 2-wire bus and data transmission protocol. A device that sends data onto the bus is defined as a transmitter and a device receiving data as a receiver. The bus must be controlled by a master device which generates the serial clock (SCL), controls the bus access, and generates the Start and Stop conditions while the 24XX256 works as a slave. Both master and slave can operate as a transmitter or receiver, but the master device determines which mode is activated.

FIGURE 4-1: DATA TRANSFER SEQUENCE ON THE SERIAL BUS

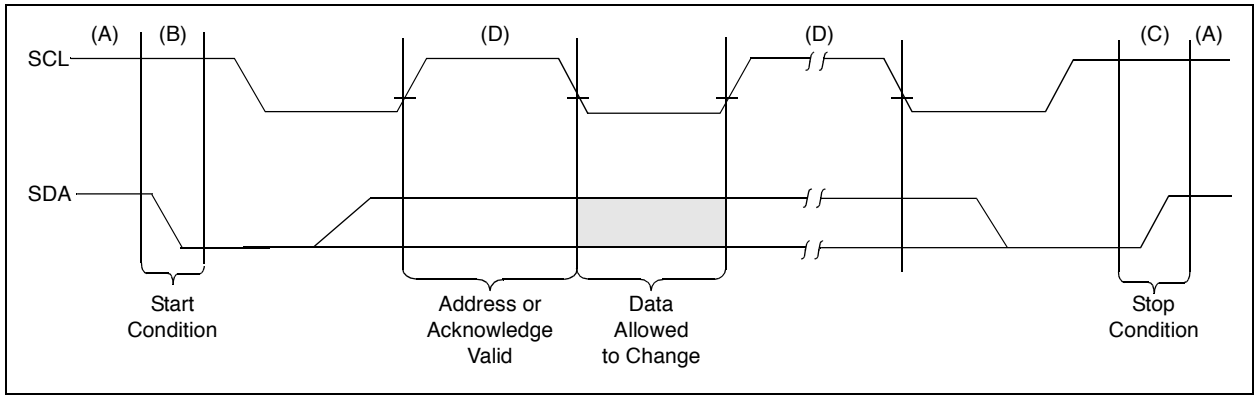

FIGURE 4-2: ACKNOWLEDGE TIMING

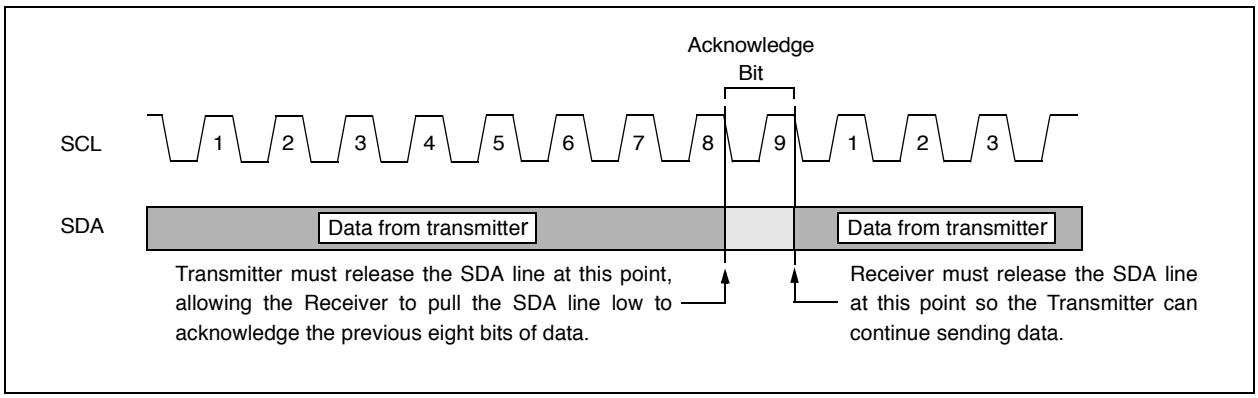

6.0 WRITE OPERATIONS

6.1 Byte Write

Following the Start condition from the master, the control code (four bits), the Chip Select (three bits) and the R/$\overline{W}$ bit (which is a logic low) are clocked onto the bus by the master transmitter. This indicates to the addressed slave receiver that the address high byte will follow after it has generated an Acknowledge bit during the ninth clock cycle. Therefore, the next byte transmitted by the master is the high-order byte of the word address and will be written into the address pointer of the 24XX256. The next byte is the Least Significant Address Byte. After receiving another Acknowledge signal from the 24XX256, the master device will transmit the data word to be written into the addressed memory location. The 24XX256 acknowledges again and the master generates a Stop condition. This initiates the internal write cycle and during this time, the 24XX256 will not generate Acknowledge signals (Figure 6-1). If an attempt is made to write to the array with the WP pin held high, the device will acknowledge the command but no write cycle will occur, no data will be written, and the device will immediately accept a new command. After a byte Write command, the internal address counter will point to the address location following the one that was just written.

6.2 Page Write

The write control byte, word address and the first data byte are transmitted to the 24XX256 in much the same way as in a byte write. The exception is that instead of generating a Stop condition, the master transmits up to 63 additional bytes, which are temporarily stored in the on-chip page buffer, and will be written into memory once the master has transmitted a Stop condition. Upon receipt of each word, the six lower address pointer bits are internally incremented by one. If the master should transmit more than 64 bytes prior to generating the Stop condition, the address counter will roll over and the previously received data will be overwritten. As with the byte write operation, once the Stop condition is received, an internal write cycle will begin (Figure 6-2). If an attempt is made to write to the array with the WP pin held high, the device will acknowledge the command, but no write cycle will occur, no data will be written and the device will immediately accept a new command.

6.3 Write-Protection

The WP pin allows the user to write-protect the entire array (0000-7FFF) when the pin is tied to VCC. If tied to VSS or left floating, the write protection is disabled. The WP pin is sampled at the Stop bit for every Write command (Figure 1-1). Toggling the WP pin after the Stop bit will have no effect on the execution of the write cycle.

Note:	Page write operations are limited to writing bytes within a single physical page, **regardless** of the number of bytes actually being written. Physical page boundaries start at addresses that are integer multiples of the page buffer size (or 'page size') and end at addresses that are integer multiples of [page size - 1]. If a Page Write command attempts to write across a physical page boundary, the result is that the data wraps around to the beginning of the current page (overwriting data previously stored there), instead of being written to the next page, as might be expected. It is, therefore, necessary for the application software to prevent page write operations that would attempt to cross a page boundary.

FIGURE 6-1: BYTE WRITE

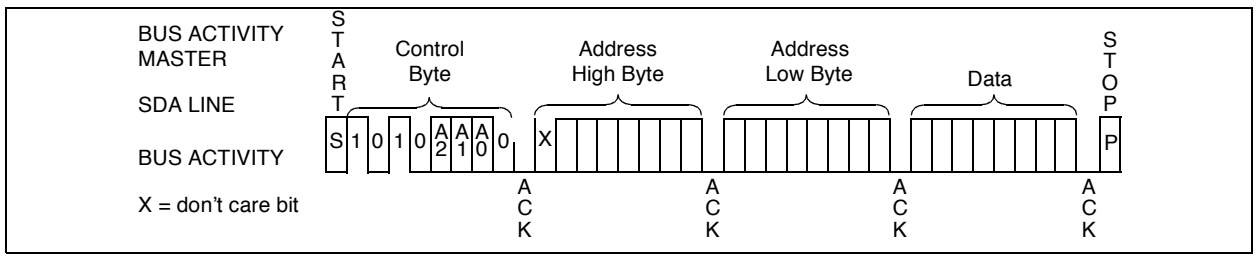

FIGURE 6-2: PAGE WRITE

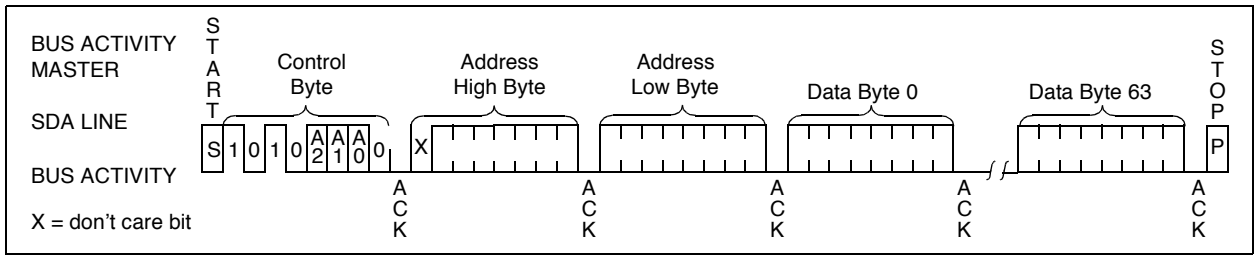

7.0 ACKNOWLEDGE POLLING

Since the device will not acknowledge during a write cycle, this can be used to determine when the cycle is complete (This feature can be used to maximize bus throughput). Once the Stop condition for a Write command has been issued from the master, the device initiates the internally timed write cycle. ACK polling can be initiated immediately. This involves the master sending a Start condition, followed by the control byte for a Write command (R/$\overline{W}$ = 0). If the device is still busy with the write cycle, then no ACK will be returned. If no ACK is returned, the Start bit and control byte must be resent. If the cycle is complete, then the device will return the ACK and the master can then proceed with the next Read or Write command. See Figure 7-1 for flow diagram.

FIGURE 7-1: ACKNOWLEDGE POLLING FLOW

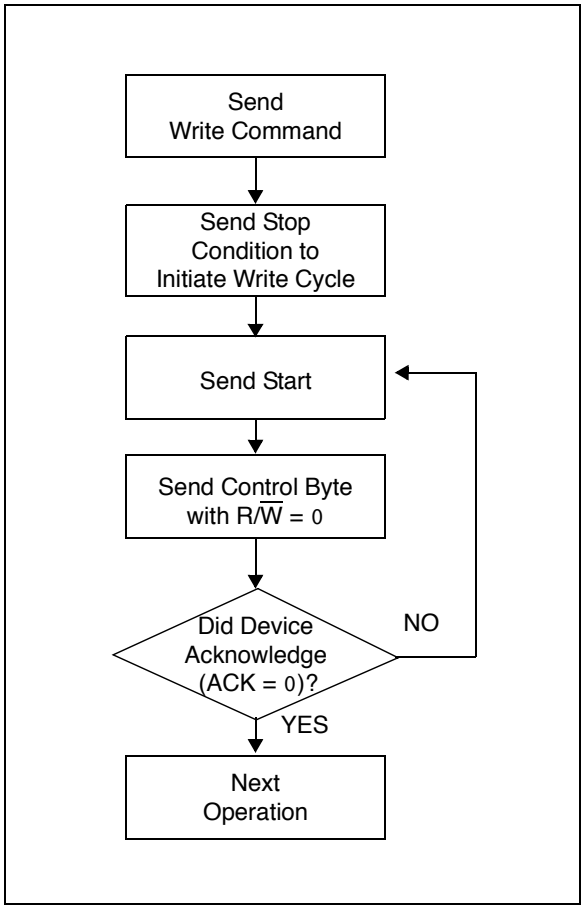

© 2004 Microchip Technology Inc.

4.3. REAL CLOCK TIME DS1307

DS1307
64 x 8, Serial, I²C Real-Time Clock

GENERAL DESCRIPTION

The DS1307 serial real-time clock (RTC) is a low-power, full binary-coded decimal (BCD) clock/calendar plus 56 bytes of NV SRAM. Address and data are transferred serially through an I²C, bidirectional bus. The clock/calendar provides seconds, minutes, hours, day, date, month, and year information. The end of the month date is automatically adjusted for months with fewer than 31 days, including corrections for leap year. The clock operates in either the 24-hour or 12-hour format with AM/PM indicator. The DS1307 has a built-in power-sense circuit that detects power failures and automatically switches to the backup supply. Timekeeping operation continues while the part operates from the backup supply.

TYPICAL OPERATING CIRCUIT

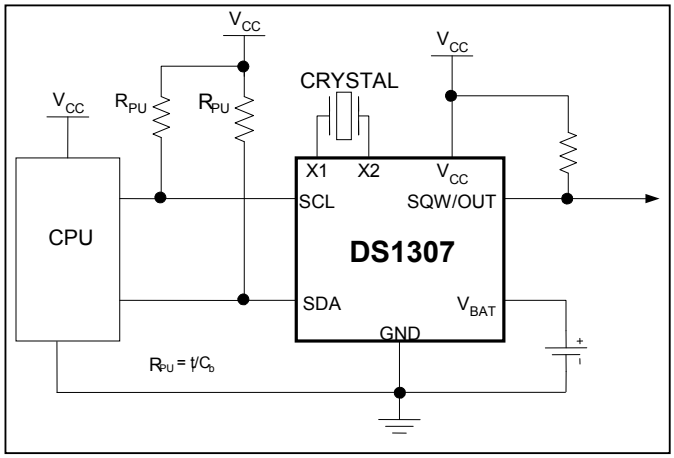

BENEFITS AND FEATURES

- Completely Manages All Timekeeping Functions
  - Real-Time Clock Counts Seconds, Minutes, Hours, Date of the Month, Month, Day of the Week, and Year with Leap-Year Compensation Valid Up to 2100
  - 56-Byte, Battery-Backed, General-Purpose RAM with Unlimited Writes
  - Programmable Square-Wave Output Signal
- Simple Serial Port Interfaces to Most Microcontrollers
  - I²C Serial Interface
- Low Power Operation Extends Battery Backup Run Time
  - Consumes Less than 500nA in Battery-Backup Mode with Oscillator Running
  - Automatic Power-Fail Detect and Switch Circuitry
- 8-Pin DIP and 8-Pin SO Minimizes Required Space
- Optional Industrial Temperature Range: -40°C to +85°C Supports Operation in a Wide Range of Applications
- Underwriters Laboratories® (UL) Recognized

PIN CONFIGURATIONS

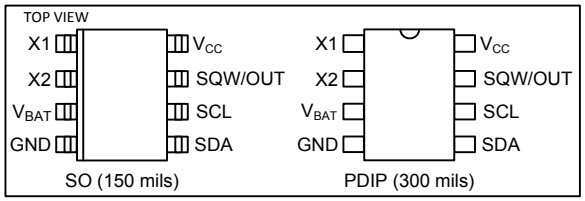

ORDERING INFORMATION

PART	TEMP RANGE	VOLTAGE (V)	PIN-PACKAGE	TOP MARK*
DS1307+	0°C to +70°C	5.0	8 PDIP (300 mils)	DS1307
DS1307N+	-40°C to +85°C	5.0	8 PDIP (300 mils)	DS1307N
DS1307Z+	0°C to +70°C	5.0	8 SO (150 mils)	DS1307
DS1307ZN+	-40°C to +85°C	5.0	8 SO (150 mils)	DS1307N
DS1307Z+T&R	0°C to +70°C	5.0	8 SO (150 mils) Tape and Reel	DS1307
DS1307ZN+T&R	-40°C to +85°C	5.0	8 SO (150 mils) Tape and Reel	DS1307N

+Denotes a lead-free/RoHS-compliant package.
**A "+" anywhere on the top mark indicates a lead-free package. An "N" anywhere on the top mark indicates an industrial temperature range device.*
Underwriters Laboratories, Inc. is a registered certification mark of Underwriters Laboratories, Inc.

ABSOLUTE MAXIMUM RATINGS

Voltage Range on Any Pin Relative to Ground .....-0.5V to +7.0V
Operating Temperature Range (Noncondensing)
Commercial.....0°C to +70°C
Industrial .....-40°C to +85°C
Storage Temperature Range ..... -55°C to +125°C
Soldering Temperature (DIP, leads).....+260°C for 10 seconds
Soldering Temperature (surface mount) .. .Refer to the JPC/JEDEC J-STD-020 Specification.

Stresses beyond those listed under "Absolute Maximum Ratings" may cause permanent damage to the device. These are stress ratings only, and functional operation of the device at these or any other conditions beyond those indicated in the operational sections of the specifications is not implied. Exposure to the absolute maximum rating conditions for extended periods may affect device reliability.

RECOMMENDED DC OPERATING CONDITIONS

(T_A = 0°C to +70°C, T_A = -40°C to +85°C.) (Notes 1, 2)

PARAMETER	SYMBOL	CONDITIONS	MIN	TYP	MAX	UNITS
Supply Voltage	V_{CC}		4.5	5.0	5.5	V
Logic 1 Input	V_{IH}		2.2		V_{CC} + 0.3	V
Logic 0 Input	V_{IL}		-0.3		+0.8	V
V_{BAT} Battery Voltage	V_{BAT}		2.0	3	3.5	V

DC ELECTRICAL CHARACTERISTICS

(V_{CC} = 4.5V to 5.5V; T_A = 0°C to +70°C, T_A = -40°C to +85°C.) (Notes 1, 2)

PARAMETER	SYMBOL	CONDITIONS	MIN	TYP	MAX	UNITS
Input Leakage (SCL)	I_{LI}		-1		1	µA
I/O Leakage (SDA, SQW/OUT)	I_{LO}		-1		1	µA
Logic 0 Output (I_{OL} = 5mA)	V_{OL}				0.4	V
Active Supply Current (f_{SCL} = 100kHz)	I_{CCA}				1.5	mA
Standby Current	I_{CCS}	(Note 3)			200	µA
V_{BAT} Leakage Current	I_{BATLKG}			5	50	nA
Power-Fail Voltage (V_{BAT} = 3.0V)	V_{PF}		1.216 x V_{BAT}	1.25 x V_{BAT}	1.284 x V_{BAT}	V

DC ELECTRICAL CHARACTERISTICS

(V_{CC} = 0V, V_{BAT} = 3.0V; T_A = 0°C to +70°C, T_A = -40°C to +85°C.) (Notes 1, 2)

PARAMETER	SYMBOL	CONDITIONS	MIN	TYP	MAX	UNITS
V_{BAT} Current (OSC ON); SQW/OUT OFF	I_{BAT1}			300	500	nA
V_{BAT} Current (OSC ON); SQW/OUT ON (32kHz)	I_{BAT2}			480	800	nA
V_{BAT} Data-Retention Current (Oscillator Off)	I_{BATDR}			10	100	nA

WARNING: Negative undershoots below -0.3V while the part is in battery-backed mode may cause loss of data.

4.4. LCD 16X2 I2C

Datasheet

I2C 1602 Serial LCD Module

Product features:

The I2C 1602 LCD module is a 2 line by 16 character display interfaced to an I2C daughter board. The I2C interface only requires 2 data connections, +5 VDC and GND to operate

For in depth information on I2C interface and history, visit: http://www.wikipedia/wiki/i2c

Specifications:

	2 lines by 16 character
I2C Address Range	0x20 to 0x27 (Default=0x27, addressable)
Operating Voltage	5 Vdc
Backlight	White
Contrast	Adjustable by potentiometer on I2c interface
Size	80mm x 36mm x 20 mm
Viewable area	66mm x 16mm

Power:

The device is powered by a single 5Vdc connection.

Pinout Diagram:

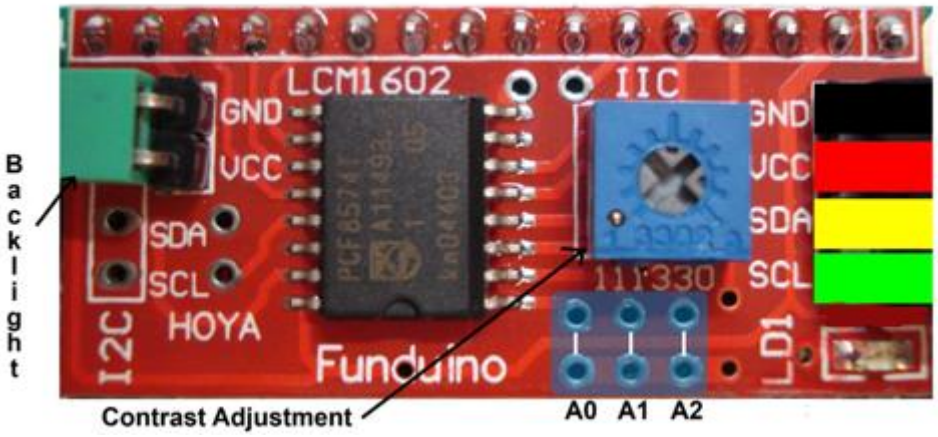

Pin/Control Descriptions:

Pin #	Name	Type	Description
1	GND	Power	Supply & Logic ground
2	VCC	Power	Digital I/O 0 or RX (serial receive)
3	SDA	I/O	Serial Data line
4	SCL	CLK	Serial Clock line
A0	A0	Jumper	Optional address selection A0 - see below
A1	A1	Jumper	Optional address selection A1 - see below
A2	A2	Jumper	Optional address selection A2 - see below
Backlight		Jumper	Jumpered - enable backlight, Open - disable backlight
Contrast		Pot	Adjust for best viewing

Addressing:

A0	A1	A2	Address
Open	Open	Open	0x27
Jumper	Open	Open	0x26
Open	Jumper	Open	0x25
Jumper	Jumper	Open	0x24
Open	Open	Jumper	0x23
Jumper	Open	Jumper	0x22
Open	Jumper	Jumper	0x21
Jumper	Jumper	Jumper	0x20

4.5. TC084

TL08xx JFET-Input Operational Amplifiers

1 Features

- Low Power Consumption: 1.4 mA/ch Typical
- Wide Common-Mode and Differential Voltage Ranges
- Low Input Bias Current: 30 pA Typical
- Low Input Offset Current: 5 pA Typical
- Output Short-Circuit Protection
- Low Total Harmonic Distortion: 0.003% Typical
- High Input Impedance: JFET Input Stage
- Latch-Up-Free Operation
- High Slew Rate: 13 V/μs Typical
- Common-Mode Input Voltage Range Includes V_{CC+}

2 Applications

- Tablets
- White goods
- Personal electronics
- Computers

3 Description

The TL08xx JFET-input operational amplifier family is designed to offer a wider selection than any previously developed operational amplifier family. Each of these JFET-input operational amplifiers incorporates well-matched, high-voltage JFET and bipolar transistors in a monolithic integrated circuit. The devices feature high slew rates, low input bias and offset currents, and low offset-voltage temperature coefficient.

Device Information(1)

PART NUMBER	PACKAGE	BODY SIZE (NOM)
TL084xD	SOIC (14)	8.65 mm × 3.91 mm
TL08xxFK	LCCC (20)	8.89 mm × 8.89 mm
TL084xJ	CDIP (14)	19.56 mm × 6.92 mm
TL084xN	PDIP (14)	19.3 mm × 6.35 mm
TL084xNS	SO (14)	10.3 mm × 5.3 mm
TL084xPW	TSSOP (14)	5.0 mm × 4.4 mm

(1) For all available packages, see the orderable addendum at the end of the data sheet.

Schematic Symbol

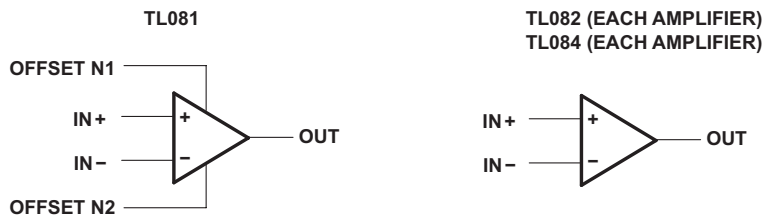

An IMPORTANT NOTICE at the end of this data sheet addresses availability, warranty, changes, use in safety-critical applications, intellectual property matters and other important disclaimers. PRODUCTION DATA.

5 Pin Configuration and Functions

TL082 FK Package
20-Pin LCCC
Top View

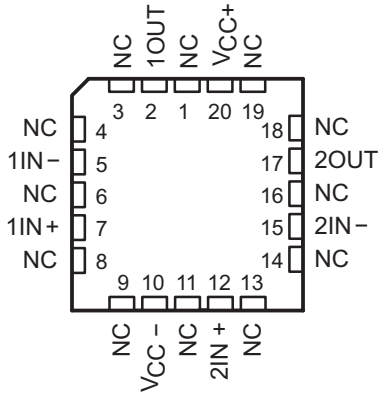

TL081 and TL081x D, P, and PS Package
8-Pin SOIC, PDIP, and SO
Top View

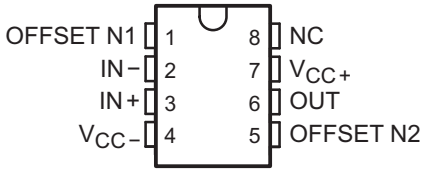

TL082 and TL082x D, JG, P, PS and PW Package
8-Pin SOIC, CDIP, PDIP, SO, and TSSOP
Top View

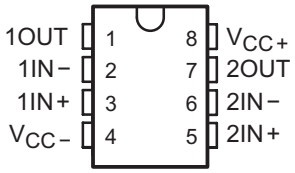

TL084 FK Package
20-Pin LCCC
Top View

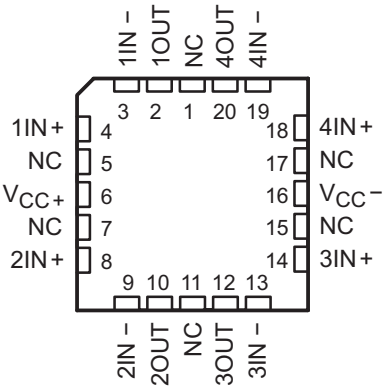

TL084 and TL084x D, J, N, NS and PW Package
14-Pin SOIC, CDIP, PDIP, SO, and TSSOP
Top View

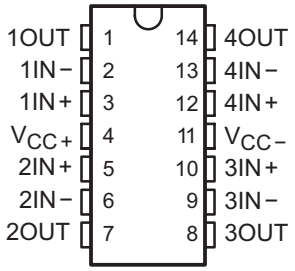

Pin Functions

PIN						I/O	DESCRIPTION
NAME	TL081	TL082		TL084			
	SOIC, PDIP, SO	SOIC, CDIP, PDIP, SO, TSSOP	LCCC	SOIC, CDIP, PDIP, SO, TSSOP	LCCC		
1IN–	—	2	5	2	3	I	Negative input
1IN+	—	3	7	3	4	I	Positive input
1OUT	—	1	2	1	2	O	Output
2IN–	—	6	15	6	9	I	Negative input
2IN+	—	5	12	5	8	I	Positive input
2OUT	—	7	17	7	10	O	Output
3IN–	—	—	—	9	13	I	Negative input
3IN+	—	—	—	10	14	I	Positive input
3OUT	—	—	—	8	12	O	Output
4IN–	—	—	—	13	19	I	Negative input
4IN+	—	—	—	12	18	I	Positive input
4OUT	—	—	—	14	20	O	Output

Copyright © 1977–2015, Texas Instruments Incorporated

Pin Functions (continued)

PIN						I/O	DESCRIPTION
NAME	TL081	TL082		TL084			
	SOIC, PDIP, SO	SOIC, CDIP, PDIP, SO, TSSOP	LCCC	SOIC, CDIP, PDIP, SO, TSSOP	LCCC		
IN–	2	—	—	—	—	I	Negative input
IN+	3	—	—	—	—	I	Positive input
NC	8	—	1	—	1	—	Do not connect
			3				
			4		5		
			6				
			8		7		
			9				
			11		11		
			13				
			14		15		
			16				
			18		17		
OFFSET N1	1	—	—	—	—	—	Input offset adjustment
OFFSET N2	5	—	—	—	—	—	Input offset adjustment
OUT	6	—	—	—	—	O	Output
V_{CC-}	4	4	10	11	16	—	Power supply
V_{CC+}	7	8	20	4	6	—	Power supply

Copyright © 1977–2015, Texas Instruments Incorporated

6 Specifications

6.1 Absolute Maximum Ratings

over operating free-air temperature range (unless otherwise noted)[1]

				MIN	MAX	UNIT
V_{CC+}	Supply voltage[2]				18	V
V_{CC-}					–18	
V_{ID}	Differential input voltage[3]				±30	V
V_I	Input voltage[2][4]				±15	V
	Duration of output short circuit[5]			Unlimited		
	Continuous total power dissipation			See *Dissipation Rating Table*		
T_A	Operating free-air temperature		TL08_C TL08_AC TL08_BC	0	70	°C
			TL08_I	–40	85	
			TL084Q	–40	125	
			TL08_M	–55	125	
	Operating virtual junction temperature				150	°C
T_C	Case temperature for 60 seconds	FK package	TL08_M		260	°C
	Lead temperature 1,6 mm (1/16 inch) from case for 10 seconds	J or JG package	TL08_M		300	°C
T_{stg}	Storage temperature			–65	150	°C

(1) Stresses beyond those listed under *Absolute Maximum Ratings* may cause permanent damage to the device. These are stress ratings only, and functional operation of the device at these or any other conditions beyond those indicated under *Recommended Operating Conditions* is not implied. Exposure to absolute-maximum-rated conditions for extended periods may affect device reliability.
(2) All voltage values, except differential voltages, are with respect to the midpoint between V_{CC+} and V_{CC-}.
(3) Differential voltages are at IN+, with respect to IN−.
(4) The magnitude of the input voltage must never exceed the magnitude of the supply voltage or 15 V, whichever is less.
(5) The output may be shorted to ground or to either supply. Temperature and/or supply voltages must be limited to ensure that the dissipation rating is not exceeded.

6.2 ESD Ratings

			VALUE	UNIT
$V_{(ESD)}$	Electrostatic discharge	Human body model (HBM), per ANSI/ESDA/JEDEC JS-001[1]	1000	V
		Charged-device model (CDM), per JEDEC specification JESD22-C101[2]	1500	

(1) JEDEC document JEP155 states that 500-V HBM allows safe manufacturing with a standard ESD control process.
(2) JEDEC document JEP157 states that 250-V CDM allows safe manufacturing with a standard ESD control process.

6.3 Recommended Operating Conditions

over operating free-air temperature range (unless otherwise noted)

			MIN	MAX	UNIT
V_{CC+}	Supply voltage		5	15	V
V_{CC-}	Supply voltage		–5	–15	V
V_{CM}	Common-mode voltage		V_{CC-} + 4	V_{CC+} – 4	V
T_A	Ambient temperature	TL08xM	–55	125	°C
		TL08xQ	–40	125	
		TL08xI	–40	85	
		TL08xC	0	70	

Copyright © 1977–2015, Texas Instruments Incorporated

4.6. PCF8574

PCF8574 Remote 8-Bit I/O Expander for I²C Bus

1 Features

- Low Standby-Current Consumption of 10 μA Max
- I²C to Parallel-Port Expander
- Open-Drain Interrupt Output
- Compatible With Most Microcontrollers
- Latched Outputs With High-Current Drive Capability for Directly Driving LEDs
- Latch-Up Performance Exceeds 100 mA Per JESD 78, Class II

2 Applications

- Telecom Shelters: Filter Units
- Servers
- Routers (Telecom Switching Equipment)
- Personal Computers
- Personal Electronics
- Industrial Automation
- Products with GPIO-Limited Processors

3 Description

This 8-bit input/output (I/O) expander for the two-line bidirectional bus (I²C) is designed for 2.5-V to 6-V V_{CC} operation.

The PCF8574 device provides general-purpose remote I/O expansion for most microcontroller families by way of the I²C interface [serial clock (SCL), serial data (SDA)].

The device features an 8-bit quasi-bidirectional I/O port (P0–P7), including latched outputs with high-current drive capability for directly driving LEDs. Each quasi-bidirectional I/O can be used as an input or output without the use of a data-direction control signal. At power on, the I/Os are high. In this mode, only a current source to V_{CC} is active.

Device Information(1)

PART NUMBER	PACKAGE (PIN)	BODY SIZE (NOM)
PCF8574	TVSOP (20)	5.00 mm × 4.40 mm
	SOIC (16)	10.30 mm × 7.50 mm
	PDIP (16)	19.30 mm × 6.35 mm
	TSSOP (20)	6.50 mm × 4.40 mm
	QFN (16)	3.00 mm × 3.00 mm
	VQFN (20)	4.50 mm × 3.50 mm

(1) For all available packages, see the orderable addendum at the end of the data sheet.

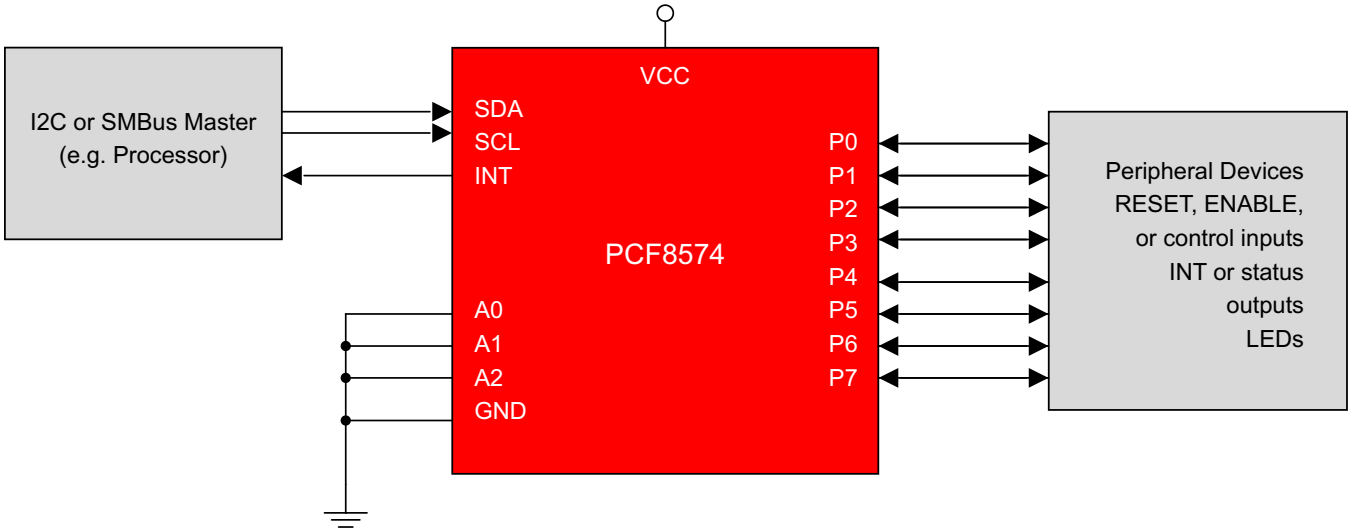

An IMPORTANT NOTICE at the end of this data sheet addresses availability, warranty, changes, use in safety-critical applications, intellectual property matters and other important disclaimers. PRODUCTION DATA.

5 Pin Configuration and Functions

RGT PACKAGE (TOP VIEW)

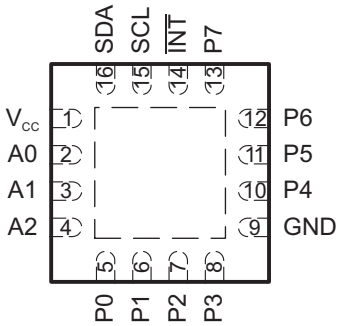

RGY PACKAGE (TOP VIEW)

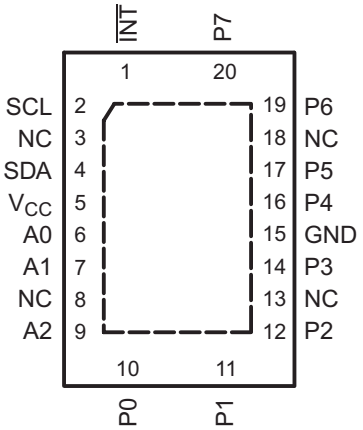

DGV OR PW PACKAGE (TOP VIEW)

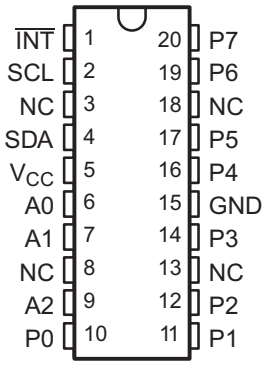

DW OR N PACKAGE (TOP VIEW)

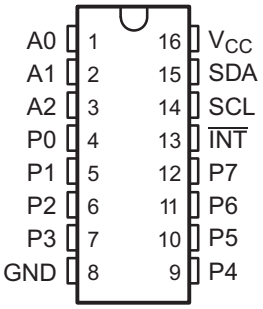

Pin Functions

PIN					TYPE	DESCRIPTION
NAME	RGT	RGY	DGV or PW	DW or N		
A [0..2]	2, 3, 4	6, 7, 9	6, 7, 9	1, 2, 3	I	Address inputs 0 through 2. Connect directly to V_{CC} or ground. Pullup resistors are not needed.
GND	9	15	15	8	—	Ground
$\overline{INT}$	14	1	1	13	O	Interrupt output. Connect to V_{CC} through a pullup resistor.
NC	-	3, 8, 13, 18	3, 8, 13, 18	-	—	Do not connect
P[0..7]	5, 6, 7, 8, 10, 11, 12, 13	10, 11, 12, 14, 16, 17, 19, 20	10, 11, 12, 14, 16, 17, 19, 20	4, 5, 6, 7, 9, 10, 11, 12	I/O	P-port input/output. Push-pull design structure.
SCL	15	2	2	14	I	Serial clock line. Connect to V_{CC} through a pullup resistor
SDA	16	4	4	15	I/O	Serial data line. Connect to V_{CC} through a pullup resistor.
V_{CC}	1	5	5	16	—	Voltage supply

Copyright © 2001–2015, Texas Instruments Incorporated

6 Specifications

6.1 Absolute Maximum Ratings

over operating free-air temperature range (unless otherwise noted)[1]

			MIN	MAX	UNIT
V_{CC}	Supply voltage range		–0.5	7	V
V_I	Input voltage range[2]		–0.5	V_{CC} + 0.5	V
V_O	Output voltage range[2]		–0.5	V_{CC} + 0.5	V
I_{IK}	Input clamp current	$V_I < 0$		–20	mA
I_{OK}	Output clamp current	$V_O < 0$		–20	mA
I_{OK}	Input/output clamp current	$V_O < 0$ or $V_O > V_{CC}$		±400	µA
I_{OL}	Continuous output low current	V_O = 0 to V_{CC}		50	mA
I_{OH}	Continuous output high current	V_O = 0 to V_{CC}		–4	mA
	Continuous current through V_{CC} or GND			±100	mA
T_J	Junction temperature			150	°C
T_{stg}	Storage temperature range		–65	150	°C

(1) Stresses beyond those listed under *Absolute Maximum Ratings* may cause permanent damage to the device. These are stress ratings only, and functional operation of the device at these or any other conditions beyond those indicated under *Recommended Operating Conditions* is not implied. Exposure to absolute-maximum-rated conditions for extended periods may affect device reliability.
(2) The input negative-voltage and output voltage ratings may be exceeded if the input and output current ratings are observed.

6.2 ESD Ratings

			VALUE	UNIT
$V_{(ESD)}$	Electrostatic discharge	Human-body model (HBM), per ANSI/ESDA/JEDEC JS-001[1]	1500	V
		Charged-device model (CDM), per JEDEC specification JESD22-C101[2]	2000	

(1) JEDEC document JEP155 states that 500-V HBM allows safe manufacturing with a standard ESD control process. Manufacturing with less than 500-V HBM is possible with the necessary precautions.
(2) JEDEC document JEP157 states that 250-V CDM allows safe manufacturing with a standard ESD control process. Manufacturing with less than 250-V CDM is possible with the necessary precautions.

6.3 Recommended Operating Conditions

		MIN	MAX	UNIT
V_{CC}	Supply voltage	2.5	6	V
V_{IH}	High-level input voltage	0.7 × V_{CC}	V_{CC} + 0.5	V
V_{IL}	Low-level input voltage	–0.5	0.3 × V_{CC}	V
I_{OH}	High-level output current		–1	mA
I_{OL}	Low-level output current		25	mA
T_A	Operating free-air temperature	–40	85	°C

6.4 Thermal Information

THERMAL METRIC[1]		PCF8574						UNIT
		DGV	DW	N	PW	RGT	RGY	
		20 PINS	16 PINS	16 PINS	20 PINS	16 PINS	20 PINS	
θ_{JA}	Junction-to-ambient thermal resistance	92	57	67	83	53	37	°C/W

(1) For more information about traditional and new thermal metrics, see the *IC Package Thermal Metrics* application report (SPRA953).

Copyright © 2001–2015, Texas Instruments Incorporated

6.5 Electrical Characteristics

over recommended operating free-air temperature range (unless otherwise noted)

PARAMETER		TEST CONDITIONS	V_{CC}	MIN	TYP(1)	MAX	UNIT
V_{IK}	Input diode clamp voltage	I_I = –18 mA	2.5 V to 6 V	–1.2			V
V_{POR}	Power-on reset voltage(2)	$V_I = V_{CC}$ or GND, I_O = 0	6 V		1.3	2.4	V
I_{OH}	P port	V_O = GND	2.5 V to 6 V	30		300	μA
I_{OHT}	P port transient pullup current	High during acknowledge, V_{OH} = GND	2.5 V		–1		mA
I_{OL}	SDA	V_O = 0.4 V	2.5 V to 6 V	3			mA
	P port	V_O = 1 V	5 V	10	25		
	$\overline{INT}$	V_O = 0.4 V	2.5 V to 6 V	1.6			
I_I	SCL, SDA	$V_I = V_{CC}$ or GND	2.5 V to 6 V			±5	μA
	$\overline{INT}$					±5	
	A0, A1, A2					±5	
I_{IHL}	P port	$V_I \geq V_{CC}$ or $V_I \leq$ GND	2.5 V to 6 V			±400	μA
I_{CC}	Operating mode	$V_I = V_{CC}$ or GND, I_O = 0, f_{SCL} = 100 kHz	6 V		40	100	μA
	Standby mode	$V_I = V_{CC}$ or GND, I_O = 0			2.5	10	
C_i	SCL	$V_I = V_{CC}$ or GND	2.5 V to 6 V		1.5	7	pF
C_{io}	SDA	$V_{IO} = V_{CC}$ or GND	2.5 V to 6 V		3	7	pF
	P port				4	10	

(1) All typical values are at V_{CC} = 5 V, T_A = 25°C.
(2) The power-on reset circuit resets the I²C-bus logic with $V_{CC} < V_{POR}$ and sets all I/Os to logic high (with current source to V_{CC}).

6.6 I²C Interface Timing Requirements

over recommended operating free-air temperature range (unless otherwise noted) (see Figure 12)

			MIN	MAX	UNIT
f_{scl}	I²C clock frequency			100	kHz
t_{sch}	I²C clock high time		4		μs
t_{scl}	I²C clock low time		4.7		μs
t_{sp}	I²C spike time			100	ns
t_{sds}	I²C serial data setup time		250		ns
t_{sdh}	I²C serial data hold time		0		ns
t_{icr}	I²C input rise time			1	μs
t_{icf}	I²C input fall time			0.3	μs
t_{ocf}	I²C output fall time (10-pF to 400-pF bus)			300	ns
t_{buf}	I²C bus free time between stop and start		4.7		μs
t_{sts}	I²C start or repeated start condition setup		4.7		μs
t_{sth}	I²C start or repeated start condition hold		4		μs
t_{sps}	I²C stop condition setup		4		μs
t_{vd}	Valid data time	SCL low to SDA output valid		3.4	μs
C_b	I²C bus capacitive load			400	pF

6.7 Switching Characteristics

over recommended operating free-air temperature range, $C_L \leq$ 100 pF (unless otherwise noted) (see Figure 13)

PARAMETER		FROM (INPUT)	TO (OUTPUT)	MIN	MAX	UNIT
t_{pv}	Output data valid	SCL	P port		4	μs
t_{su}	Input data setup time	P port	SCL	0		μs
t_h	Input data hold time	P port	SCL	4		μs
t_{iv}	Interrupt valid time	P port	$\overline{INT}$		4	μs
t_{ir}	Interrupt reset delay time	SCL	$\overline{INT}$		4	μs

Copyright © 2001–2015, Texas Instruments Incorporated

8 Detailed Description

8.1 Overview

The PCF8574 device is an 8-bit I/O expander for the two-line bidirectional bus (I2C) is designed for 2.5-V to 5.5-V V_{CC} operation. It provides general-purpose remote I/O expansion for most micro-controller families via the I2C interface (serial clock, SCL, and serial data, SDA, pins).

The PCF8574 device provides an open-drain output ($\overline{INT}$) that can be connected to the interrupt input of a microcontroller. An interrupt is generated by any rising or falling edge of the port inputs in the input mode. After time, t_{iv}, $\overline{INT}$ is valid. Resetting and reactivating the interrupt circuit is achieved when data on the port is changed to the original setting or data is read from, or written to, the port that generated the interrupt. Resetting occurs in the read mode at the acknowledge bit after the rising edge of the SCL signal, or in the write mode at the acknowledge bit after the high-to-low transition of the SCL signal. Interrupts that occur during the acknowledge clock pulse can be lost (or be very short) due to the resetting of the interrupt during this pulse. Each change of the I/Os after resetting is detected and, after the next rising clock edge, is transmitted as $\overline{INT}$. Reading from, or writing to, another device does not affect the interrupt circuit. This device does not have internal configuration or status registers. Instead, read or write to the device I/Os directly after sending the device address (see Figure 16 and Figure 17).

By sending an interrupt signal on this line, the remote I/O can inform the microcontroller if there is incoming data on its ports without having to communicate by way of the I^2C bus. Therefore, PCF8574 can remain a simple slave device.

An additional strong pullup to V_{CC} allows fast rising edges into heavily loaded outputs. This device turns on when an output is written high and is switched off by the negative edge of SCL. The I/Os should be high before being used as inputs.

8.2 Functional Block Diagram

8.2.1 Simplified Block Diagram of Device

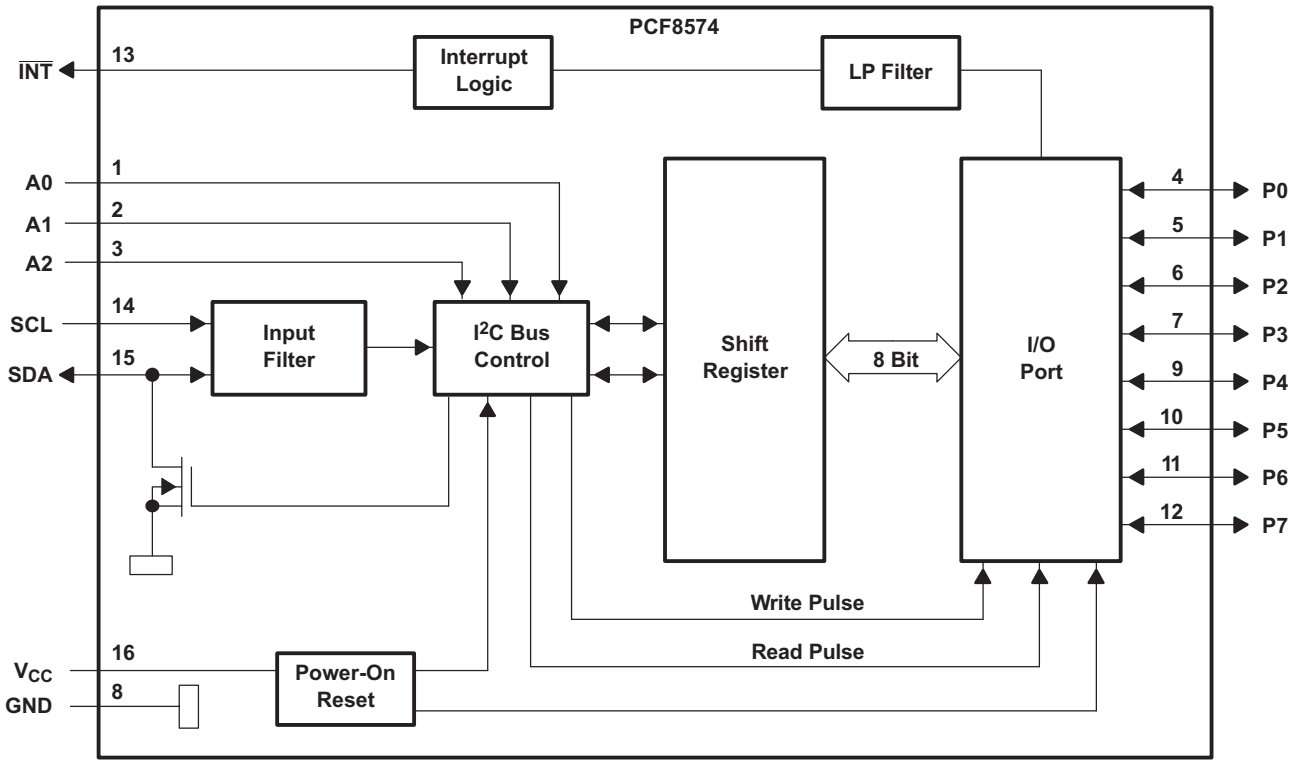

Pin numbers shown are for the DW and N packages.

8.3.3 Address Reference

INPUTS			I²C BUS SLAVE 8-BIT READ ADDRESS	I²C BUS SLAVE 8-BIT WRITE ADDRESS
A2	A1	A0		
L	L	L	65 (decimal), 41 (hexadecimal)	64 (decimal), 40 (hexadecimal)
L	L	H	67 (decimal), 43 (hexadecimal)	66 (decimal), 42 (hexadecimal)
L	H	L	69 (decimal), 45 (hexadecimal)	68 (decimal), 44 (hexadecimal)
L	H	H	71 (decimal), 47 (hexadecimal)	70 (decimal), 46 (hexadecimal)
H	L	L	73 (decimal), 49 (hexadecimal)	72 (decimal), 48 (hexadecimal)
H	L	H	75 (decimal), 4B (hexadecimal)	74 (decimal), 4A (hexadecimal)
H	H	L	77 (decimal), 4D (hexadecimal)	76 (decimal), 4C (hexadecimal)
H	H	H	79 (decimal), 4F (hexadecimal)	78 (decimal), 4E (hexadecimal)

8.4 Device Functional Modes

Figure 16 and Figure 17 show the address and timing diagrams for the write and read modes, respectively.

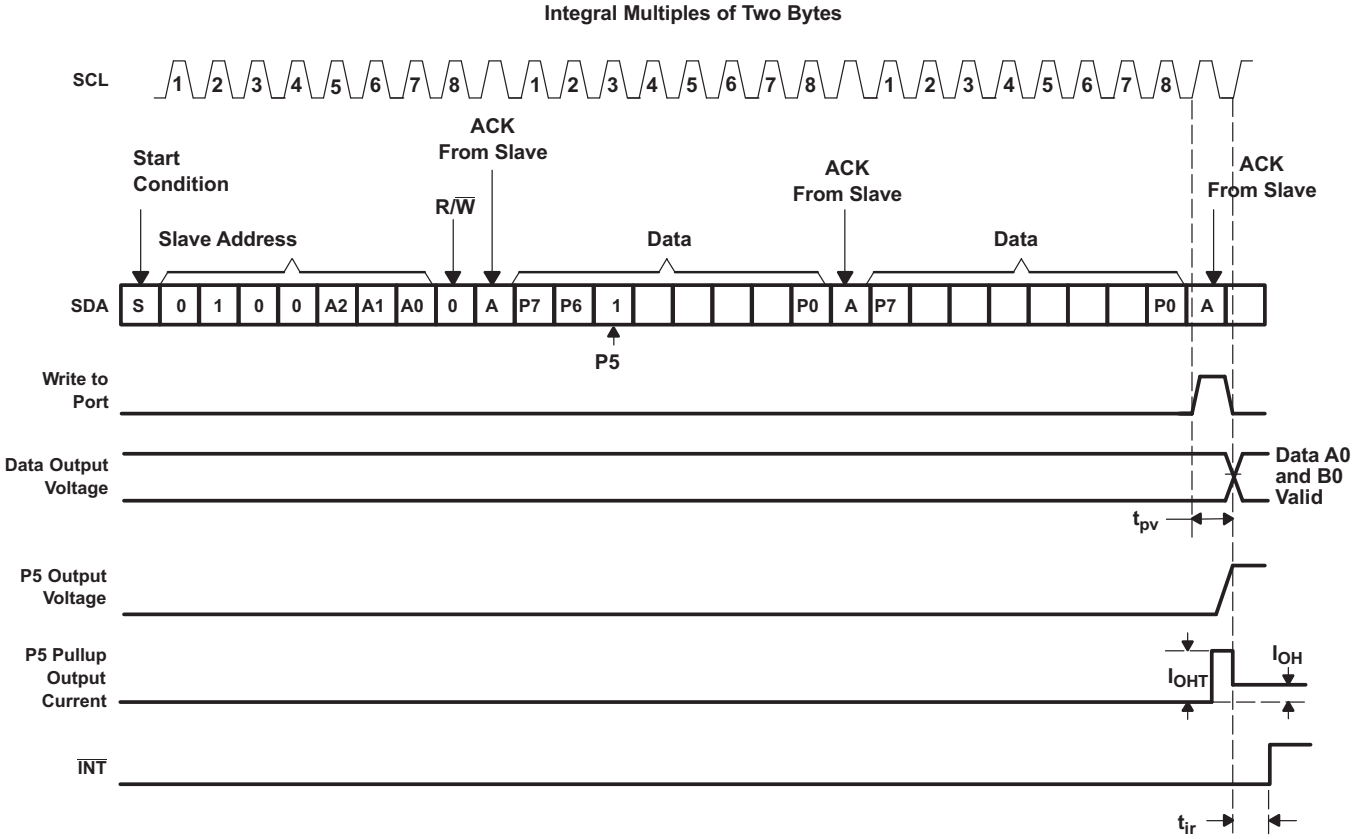

Figure 16. Write Mode (Output)

4.7. ULN2803

ULN2803A Darlington Transistor Arrays

1 Features

- 500-mA-Rated Collector Current (Single Output)
- High-Voltage Outputs: 50 V
- Output Clamp Diodes
- Inputs Compatible With Various Types of Logic

2 Applications

- Relay Drivers
- Hammer Drivers
- Lamp Drivers
- Display Drivers (LED and Gas Discharge)
- Line Drivers
- Logic Buffers
- Stepper Motors
- IP Camera
- HVAC Valve and LED Dot Matrix

3 Description

The ULN2803A device is a 50 V, 500 mA Darlington transistor array. The device consists of eight NPN Darlington pairs that feature high-voltage outputs with common-cathode clamp diodes for switching inductive loads. The collector-current rating of each Darlington pair is 500 mA. The Darlington pairs may be connected in parallel for higher current capability.

Applications include relay drivers, hammer drivers, lamp drivers, display drivers (LED and gas discharge), line drivers, and logic buffers. The ULN2803A device has a 2.7-kΩ series base resistor for each Darlington pair for operation directly with TTL or 5-V CMOS devices.

Device Information(1)

PART NUMBER	PACKAGE	BODY SIZE (NOM)
ULN2803ADW	SOIC (18)	11.55 mm × 7.50 mm

(1) For all available packages, see the orderable addendum at the end of the data sheet.

Logic Diagram

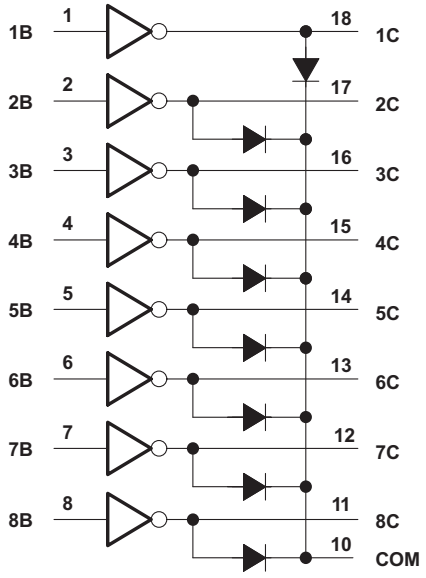

An IMPORTANT NOTICE at the end of this data sheet addresses availability, warranty, changes, use in safety-critical applications, intellectual property matters and other important disclaimers. PRODUCTION DATA.

Table of Contents

1 **Features** ... 1
2 **Applications** ... 1
3 **Description** ... 1
4 **Revision History** ... 2
5 **Pin Configuration and Functions** ... 3
6 **Specifications** ... 4
6.1 Absolute Maximum Ratings ... 4
6.2 ESD Ratings ... 4
6.3 Recommended Operating Conditions ... 4
6.4 Thermal Information ... 4
6.5 Electrical Characteristics ... 5
6.6 Switching Characteristics ... 5
6.7 Typical Characteristics ... 5
7 **Parameter Measurement Information** ... 6
8 **Detailed Description** ... 9
8.1 Overview ... 9
8.2 Functional Block Diagram ... 9
8.3 Feature Description ... 9
8.4 Device Functional Modes ... 9
9 **Application and Implementation** ... 10
9.1 Application Information ... 10
9.2 Typical Application ... 10
10 **Power Supply Recommendations** ... 12
11 **Layout** ... 12
11.1 Layout Guidelines ... 12
11.2 Layout Example ... 12
12 **Device and Documentation Support** ... 13
12.1 Receiving Notification of Documentation Updates 13
12.2 Community Resources ... 13
12.3 Trademarks ... 13
12.4 Electrostatic Discharge Caution ... 13
12.5 Glossary ... 13
13 **Mechanical, Packaging, and Orderable Information** ... 13

4 Revision History

NOTE: Page numbers for previous revisions may differ from page numbers in the current version.

Changes from Revision G (January 2015) to Revision H	Page
• Deleted obsolete orderable ULN2803AN and removed all references to N package	1
• Added Storage temperature, T_{stg} in *Absolute Maximum Ratings*	4
• Deleted V_I from *Recommended Operating Conditions*	4
• Added Ambient temperature, T_A in *Recommended Operating Conditions*	4
• Changed coil supply voltage specifications in *Design Parameters*	11
• Added *Receiving Notification of Documentation Updates* section and *Community Resources* section	13

Changes from Revision F (January 2014) to Revision G	Page
• Added *Applications*, *Device Information* table, *Pin Functions* table, *ESD Ratings* table, *Thermal Information* table, *Typical Characteristics*, *Feature Description* section, *Device Functional Modes*, *Application and Implementation* section, *Power Supply Recommendations* section, *Layout* section, *Device and Documentation Support* section, and *Mechanical, Packaging, and Orderable Information* section.	1

Changes from Revision E (July 2006) to Revision F	Page
• Updated document to new TI data sheet format - no specification changes.	1
• Deleted *Ordering Information* table.	1

Copyright © 1997–2017, Texas Instruments Incorporated

8 Detailed Description

8.1 Overview

This standard device has proven ubiquity and versatility across a wide range of applications. This is due to its integration of 8 Darlington transistors that are capable of sinking up to 500 mA and wide GPIO range capability.

The ULN2803A is comprised of eight high voltage, high current NPN Darlington transistor pairs. All units feature a common emitter and open collector outputs. To maximize their effectiveness, these units contain suppression diodes for inductive loads. The ULN2803A has a series base resistor to each Darlington pair, thus allowing operation directly with TTL or CMOS operating at supply voltages of 5 V or 3.3 V. The ULN2803A offers solutions to a great many interface needs, including solenoids, relays, lamps, small motors, and LEDs. Applications requiring sink currents beyond the capability of a single output may be accommodated by paralleling the outputs.

8.2 Functional Block Diagram

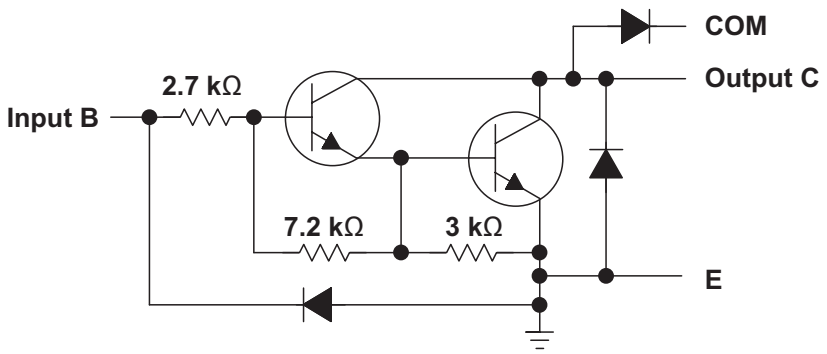

8.3 Feature Description

Each channel of ULN2803A consists of Darlington connected NPN transistors. This connection creates the effect of a single transistor with a very-high current gain. The very high β allows for high output current drive with a very-low input current, essentially equating to operation with low GPIO voltages.

The GPIO voltage is converted to base current through the 2.7-kΩ resistor connected between the input and base of the predriver Darlington NPN.

The diodes connected between the output and COM pin are used to suppress the kick-back voltage from an inductive load that is excited when the NPN drivers are turned off (stop sinking) and the stored energy in the coils causes a reverse current to flow into the coil supply through the kick-back diode.

In normal operation, the diodes on base and collector pins to emitter will be reverse biased. If these diode are forward biased, internal parasitic NPN transistors will draw (a nearly equal) current from other (nearby) device pins.

8.4 Device Functional Modes

8.4.1 Inductive Load Drive

When the COM pin is tied to the coil supply voltage, ULN2803A is able to drive inductive loads and suppress the kick-back voltage through the internal free wheeling diodes.

8.4.2 Resistive Load Drive

When driving resistive loads, COM can be left unconnected or connected to the load voltage supply. If multiple supplies are used, connect to the highest voltage supply.

Copyright © 1997–2017, Texas Instruments Incorporated

4.8. MODUL BUETOOTH HC-06

1. Product's picture

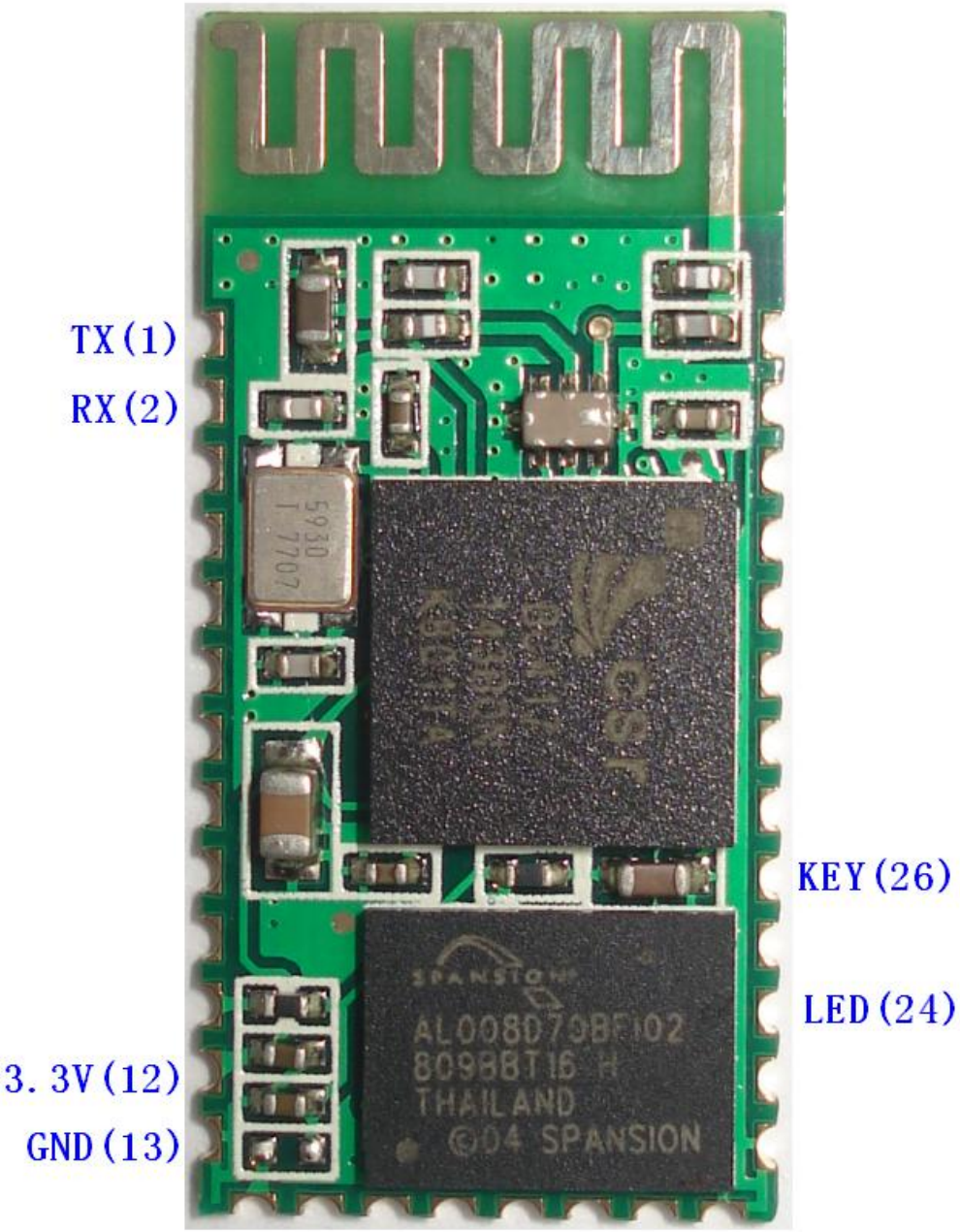

Figure 1 A Bluetooth module

2. Feature

- Wireless transceiver
  - Sensitivity (Bit error rate) can reach -80dBm.
  - The change range of output's power: -4 - +6dBm.
- Function description (perfect Bluetooth solution)
  - Has an EDR module; and the change range of modulation depth: 2Mbps - 3Mbps.
  - Has a build-in 2.4GHz antenna; user needn't test antenna.
  - Has the external 8Mbit FLASH
  - Can work at the low voltage (3.1V~4.2V). The current in pairing is in the range of 30～40mA. The current in communication is 8mA.
  - Standard HCI Port (UART or USB)
  - USB Protocol: Full Speed USB1.1, Compliant With 2.0
  - This module can be used in the SMD.
  - It's made through RoHS process.
  - The board PIN is half hole size.
  - Has a 2.4GHz digital wireless transceiver.
  - Bases at CSR BC04 Bluetooth technology.
  - Has the function of adaptive frequency hopping.
  - Small (27mm×13mm×2mm)
  - Peripherals circuit is simple.
  - It's at the Bluetooth class 2 power level.
  - Storage temperature range: -40 ℃ - 85℃，work temperature range: -25 ℃ - +75℃
  - Any wave inter Interference: 2.4MHz，the power of emitting: 3 dBm.
  - Bit error rate: 0. Only the signal decays at the transmission link, bit error may be produced. For example, when RS232 or TTL is being processed, some signals may decay.

- Low power consumption
- Has high-performance wireless transceiver system
- Low Cost

- Application fields:
  - Bluetooth Car Handsfree Device
  - Bluetooth GPS
  - Bluetooth PCMCIA , USB Dongle
  - Bluetooth Data Transfer
- Software
  - CSR

3. PINs description

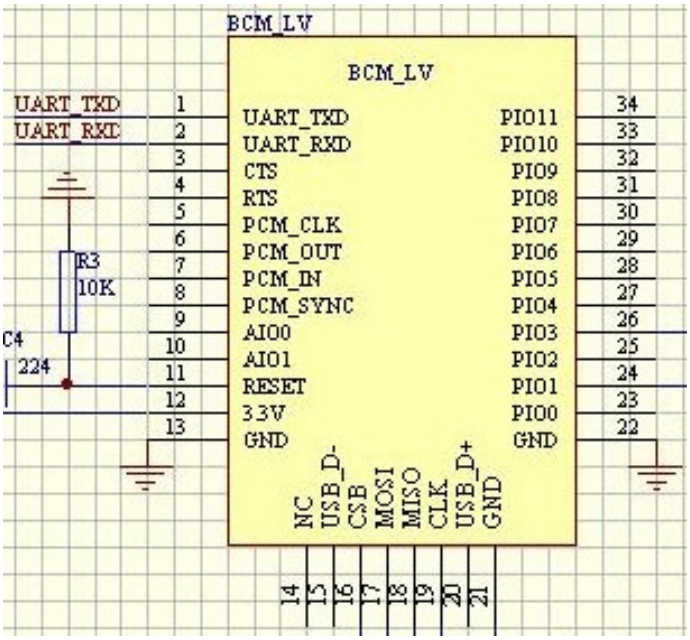

Figure 3 PIN configuration

The PINs at this block diagram is as same as the physical one.

PIN Name	PIN #	Pad type	Description	Note
GND	13 21 22	VSS	Ground pot	
1V8	14	VDD	Integrated 1.8V (+) supply with On-chip linear regulator output within 1.7-1.9V	
VCC	12	3.3V		
AIO0	9	Bi-Directional	Programmable input/output line	
AIO1	10	Bi-Directional	Programmable input/output line	

PIO0	23	Bi-Directional RX EN	Programmable input/output line, control output for LNA(if fitted)	
PIO1	24	Bi-Directional TX EN	Programmable input/output line, control output for PA(if fitted)	
PIO2	25	Bi-Directional	Programmable input/output line	
PIO3	26	Bi-Directional	Programmable input/output line	
PIO4	27	Bi-Directional	Programmable input/output line	
PIO5	28	Bi-Directional	Programmable input/output line	
PIO6	29	Bi-Directional	Programmable input/output line	CLK_REQ
PIO7	30	Bi-Directional	Programmable input/output line	CLK_OUT
PIO8	31	Bi-Directional	Programmable input/output line	
PIO9	32	Bi-Directional	Programmable input/output line	
PIO10	33	Bi-Directional	Programmable input/output line	
PIO11	34	Bi-Directional	Programmable input/output line	
RESETB	11	CMOS Input with weak intemal pull-down		
UART_RTS	4	CMOS output, tri-stable with weak internal pull-up	UART request to send, active low	
UART_CTS	3	CMOS input with weak internal pull-down	UART clear to send, active low	
UART_RX	2	CMOS input with weak internal pull-down	UART Data input	
UART_TX	1	CMOS output, Tri-stable with weak internal pull-up	UART Data output	
SPI_MOSI	17	CMOS input with weak internal pull-down	Serial peripheral interface data input	
SPI_CSB	16	CMOS input with weak internal	Chip select for serial peripheral interface, active low	

		pull-up		
SPI_CLK	19	CMOS input with weak internal pull-down	Serial peripheral interface clock	
SPI_MISO	18	CMOS input with weak internal pull-down	Serial peripheral interface data Output	
USB_-	15	Bi-Directional		
USB_+	20	Bi-Directional		
1.8V	14		1.8V external power supply input	Default : 1.8V internal powe r supply.
PCM_CLK	5	Bi-Directional		
PCM_OUT	6	CMOS output		
PCM_IN	7	CMOS Input		
PCM_SYNC	8	Bi-Directional		

4.9. TC1047

TC1047/TC1047A

Precision Temperature-to-Voltage Converter

Features

- Supply Voltage Range:
  - **TC1047:** 2.7V to 4.4V
  - **TC1047A:** 2.5V to 5.5V
- Wide Temperature Measurement Range:
  - -40°C to +125°C
- High Temperature Converter Accuracy:
  - ± 2°C, Max, at 25°C
- Linear Temperature Slope: 10 mV/°C (typ.)
- Available in 3-Pin SOT-23B Package
- Very Low Supply Current:
  - 35 µA Typical

Applications

- Cellular Phones
- Power Supply Thermal Shutdown
- Temperature-Controlled Fans
- Temperature Measurement/Instrumentation
- Temperature Regulators
- Consumer Electronics
- Portable Battery-Powered Equipment

Block Diagram

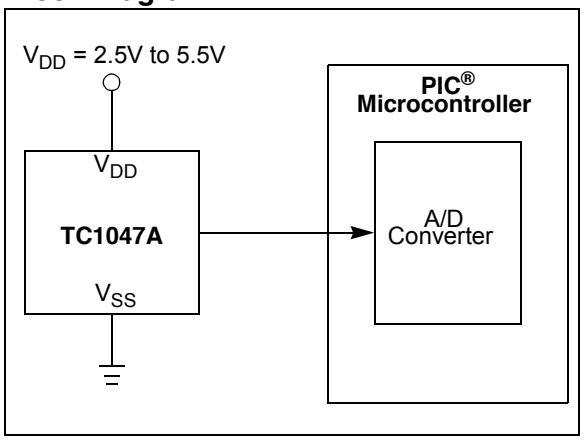

General Description

The TC1047 and TC1047A are linear voltage output temperature sensors whose output voltage is directly proportional to the measured temperature. The TC1047 and TC1047A can accurately measure temperature from -40°C to +125°C. With the TC1047, the supply voltage can vary between 2.7V and 4.4V. The power supply range of the TC1047A is from 2.5V to 5.5V.

The output voltage range for these devices is typically 100 mV at -40°C, 500 mV at 0°C, 750 mV at +25°C and 1.75V at +125°C. A 10 mV/°C voltage slope output response allows for a predictable temperature measurement over a wide temperature range. The TC1047 and TC1047A are packaged in 3-pin SOT-23B packages, making them ideal for space-critical applications.

Package Type

3-Pin SOT-23B(NOTE)

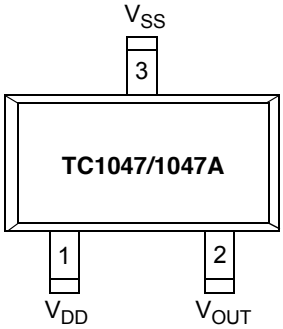

Note: 3-Pin SOT-23B is equivalent to JEDEC TO-236

© 2001-2012 Microchip Technology Inc.

1.0 ELECTRICAL CHARACTERISTICS

Absolute Maximum Ratings*

Supply Voltage .....+7V

Voltage on Any Pin with Respect to Supplies:
.....V_{SS} -0.3 to V_{DD} +0.3V

Operating Temperature .....-40°C to +125°C

Storage Temperature Range .....-55°C to +150°C

*Stresses above those listed under "Absolute Maximum Ratings" may cause permanent damage to the device. These are stress ratings only and functional operation of the device at these or any other conditions above those indicated in the operation sections of the specifications is not implied. Exposure to Absolute Maximum Rating conditions for extended periods may affect device reliability.

ELECTRICAL CHARACTERISTICS

Electrical Specifications: Unless otherwise indicated, these specifications apply for the entire supply voltage range and for T_A = -40°C to +125°C.

Parameters	Sym	Min	Typ	Max	Units	Conditions
Supply Voltage	V_{DD}	2.7	—	4.4	V	TC1047
		2.5	—	5.5	V	TC1047A
Supply Current, Operating	I_Q	—	35	60	µA	
Average Slope of Output Voltage	A_V	—	10	—	mV/°C	
Temperature Accuracy	TMP_{ACY}	-2	±0.5	+2	°C	T_A = 25°C
		-3	±0.5	+3	°C	T_A = +125°C
		—	1.0	—	°C	T_A = -40°C
Output Voltage	V_{OUT}	—	100	—	mV	T_A = -40°C
		730	750	770	mV	T_A = 25°C
		1720	1750	1780	mV	T_A = +125°C
Output Source and Sink Current	I_{OUT}	100	—	—	µA	

TEMPERATURE CHARACTERISTICS

Electrical Specifications: Unless otherwise indicated, V_{DD} = +2.3V to +5.5V and V_{SS} = GND.

Parameters	Sym	Min	Typ	Max	Units	Conditions
Temperature Ranges						
Specified Temperature Range	T_A	-40	—	+85	°C	
Operating Temperature Range	T_A	-40	—	+125	°C	**Note 1**
Storage Temperature Range	T_A	-65	—	+150	°C	
Thermal Package Resistances						
Thermal Resistance, 3L-SOT-23B	θ_{JA}	—	336	—	°C/W	

Note 1: The TC1047/TC1047A operate over this extended temperature range, but with reduced performance. In any case, the Junction Temperature (T_J) must not exceed the Absolute Maximum specification of +150°C.

© 2001-2012 Microchip Technology Inc.

3.0 PIN DESCRIPTIONS

The descriptions of the pins are listed in Table 3-1.

TABLE 3-1: PIN FUNCTION TABLE

Pin No.	Symbol	Description
1	V_{DD}	Input Supply Voltage
2	V_{OUT}	Temperature Sensor Output Terminal
3	V_{SS}	Ground Terminal

4.0 DETAILED DESCRIPTION

The TC1047 and TC1047A have an output voltage that varies linearly with temperature in degrees Celsius. Figure 4-1 shows a plot of the output voltage versus temperature for the TC1047 and TC1047A. The temperature slope is fixed at 10 mV/°C and the output voltage at 0°C is 500 mV.

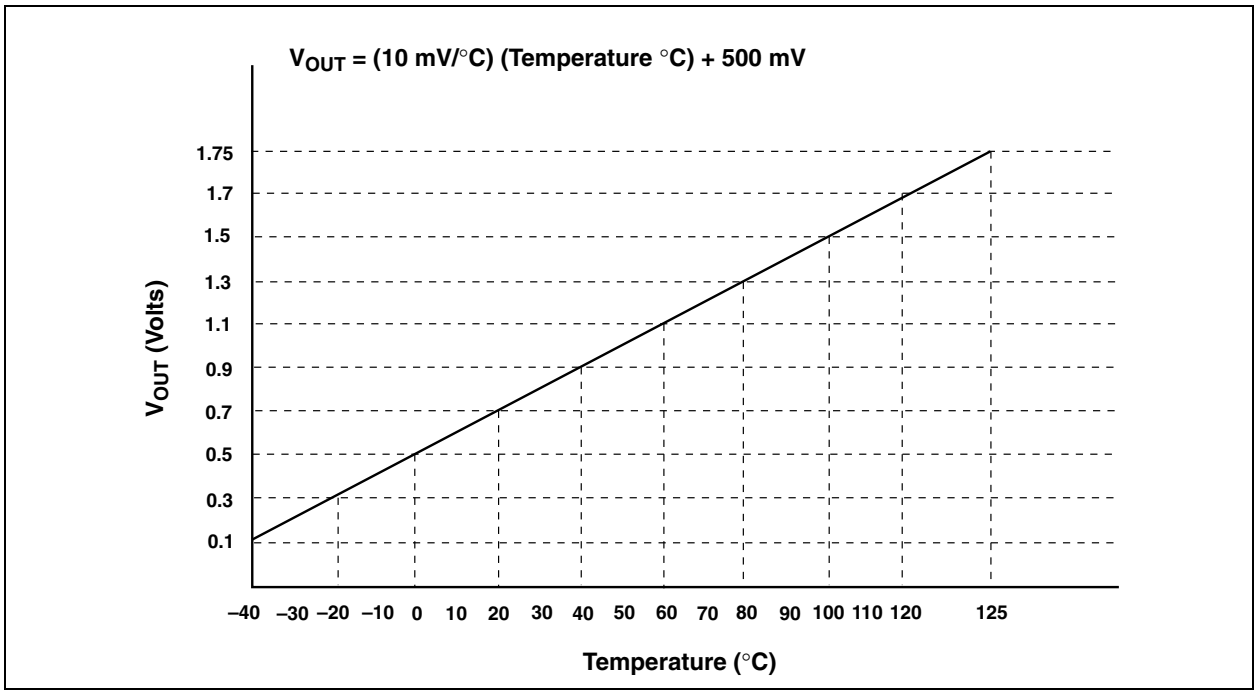

FIGURE 4-1: *Output Voltage vs. Temperature.*

© 2001-2012 Microchip Technology Inc.

4.10. ACS712

Fully Integrated, Hall Effect-Based Linear Current Sensor with 2.1 kVRMS Voltage Isolation and a Low-Resistance Current Conductor

Features and Benefits

- Low-noise analog signal path
- Device bandwidth is set via the new FILTER pin
- 5 µs output rise time in response to step input current
- 80 kHz bandwidth
- Total output error 1.5% at T_A = 25°C
- Small footprint, low-profile SOIC8 package
- 1.2 mΩ internal conductor resistance
- 2.1 kV_{RMS} minimum isolation voltage from pins 1-4 to pins 5-8
- 5.0 V, single supply operation
- 66 to 185 mV/A output sensitivity
- Output voltage proportional to AC or DC currents
- Factory-trimmed for accuracy
- Extremely stable output offset voltage
- Nearly zero magnetic hysteresis
- Ratiometric output from supply voltage

TÜV America
Certificate Number:
U8V 06 05 54214 010

Package: 8 Lead SOIC (suffix LC)

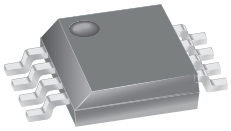

Approximate Scale 1:1

Description

The Allegro® ACS712 provides economical and precise solutions for AC or DC current sensing in industrial, commercial, and communications systems. The device package allows for easy implementation by the customer. Typical applications include motor control, load detection and management, switched-mode power supplies, and overcurrent fault protection.

The device consists of a precise, low-offset, linear Hall sensor circuit with a copper conduction path located near the surface of the die. Applied current flowing through this copper conduction path generates a magnetic field which is sensed by the integrated Hall IC and converted into a proportional voltage. Device accuracy is optimized through the close proximity of the magnetic signal to the Hall transducer. A precise, proportional voltage is provided by the low-offset, chopper-stabilized BiCMOS Hall IC, which is programmed for accuracy after packaging.

The output of the device has a positive slope (>$V_{IOUT(Q)}$) when an increasing current flows through the primary copper conduction path (from pins 1 and 2, to pins 3 and 4), which is the path used for current sensing. The internal resistance of this conductive path is 1.2 mΩ typical, providing low power

Continued on the next page…

Typical Application

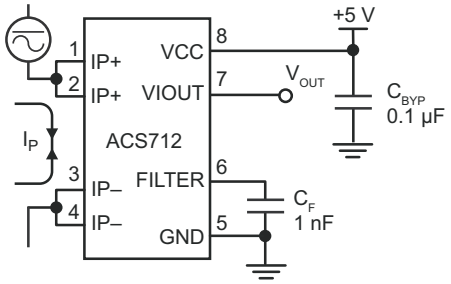

Application 1. The ACS712 outputs an analog signal, V_{OUT}, that varies linearly with the uni- or bi-directional AC or DC primary sensed current, I_P, within the range specified. C_F is recommended for noise management, with values that depend on the application.

Description (continued)

loss. The thickness of the copper conductor allows survival of the device at up to 5× overcurrent conditions. The terminals of the conductive path are electrically isolated from the sensor leads (pins 5 through 8). This allows the ACS712 current sensor to be used in applications requiring electrical isolation without the use of opto-isolators or other costly isolation techniques.

The ACS712 is provided in a small, surface mount SOIC8 package. The leadframe is plated with 100% matte tin, which is compatible with standard lead (Pb) free printed circuit board assembly processes. Internally, the device is Pb-free, except for flip-chip high-temperature Pb-based solder balls, currently exempt from RoHS. The device is fully calibrated prior to shipment from the factory.

Selection Guide

Part Number	Packing*	T_A (°C)	Optimized Range, I_P (A)	Sensitivity, Sens (Typ) (mV/A)
ACS712ELCTR-05B-T	Tape and reel, 3000 pieces/reel	–40 to 85	±5	185
ACS712ELCTR-20A-T	Tape and reel, 3000 pieces/reel	–40 to 85	±20	100
ACS712ELCTR-30A-T	Tape and reel, 3000 pieces/reel	–40 to 85	±30	66

*Contact Allegro for additional packing options.

Absolute Maximum Ratings

Characteristic	Symbol	Notes	Rating	Units
Supply Voltage	V_{CC}		8	V
Reverse Supply Voltage	V_{RCC}		–0.1	V
Output Voltage	V_{IOUT}		8	V
Reverse Output Voltage	V_{RIOUT}		–0.1	V
Reinforced Isolation Voltage	V_{ISO}	Pins 1-4 and 5-8; 60 Hz, 1 minute, T_A=25°C	2100	V
		Voltage applied to leadframe (Ip+ pins), based on IEC 60950	184	V_{peak}
Basic Isolation Voltage	$V_{ISO(bsc)}$	Pins 1-4 and 5-8; 60 Hz, 1 minute, T_A=25°C	1500	V
		Voltage applied to leadframe (Ip+ pins), based on IEC 60950	354	V_{peak}
Output Current Source	$I_{IOUT(Source)}$		3	mA
Output Current Sink	$I_{IOUT(Sink)}$		10	mA
Overcurrent Transient Tolerance	I_P	1 pulse, 100 ms	100	A
Nominal Operating Ambient Temperature	T_A	Range E	–40 to 85	ºC
Maximum Junction Temperature	T_J(max)		165	ºC
Storage Temperature	T_{stg}		–65 to 170	ºC

Parameter	Specification
Fire and Electric Shock	CAN/CSA-C22.2 No. 60950-1-03 UL 60950-1:2003 EN 60950-1:2001