A REVIEW AND GAP ANALYSIS OF EXPLOITING AERODYNAMIC FORCES AS A MEANS TO CONTROL SATELLITE FORMATION FLIGHT

C. Traub[*] [a], F. Romano[a], T. Binder[a], A. Boxberger[a], G. Herdrich[a], S. Fasoulas[a], P. Roberts[b], K. Smith[b], S. Edmondson[b], S. Haigh[b], N. Crisp[b], V. T. A. Oiko[b], R. Lyons[b], S. D. Worrall[b], S. Livadiotti[b], J. Becedas[c], G. González[c], R. M. Dominguez[c], D. González[c], L. Ghizoni[d], V. Jungnell[d], K. Bay[d], J. Morsbøl[d], D. Garcia-Almiñana[e], S. Rodriguez-Donaire[e], M. Sureda[e], D. Kataria[f], R. Outlaw[g], R. Villain[h], J. S. Perez[h], A. Conte[h], B. Belkouchi[h], A. Schwalber[i], B. Heißerer[i]

[a] *Institute of Space Systems (IRS), University of Stuttgart, Pfaffenwaldring 29, 70569, Stuttgart, Germany*
[b] *School of Mechanical, Aerospace and Civil Engineering, The University of Manchester, George Begg Building, Sackville Street, Manchester, M13 9PL, UK*
[c] *Elecnor Deimos Satellite Systems, C/Francia 9, 13500, Puertollano, Spain*
[d] *GomSpace AS, Alfred Nobels Vej, 21A 1., Aalborg, Denmark*
[e] *UPC-BarcelonaTECH, Colom 11, TR5 – 08222 Terrassa, Spain*
[f] *Mullard Space Science Laboratory, University College London, Holmbury St. Mary, Dorking, Surrey, RH5 6NT, UK*
[g] *Cristopher Newport University, Newport News, Virginia 23606, US*
[h] *Euroconsult, 86 Boulevard de Sébastopol, Paris, France*
[i] *Concentris Research Management GmbH, Ludwigstrasse 4, 82256 Fürstenfeldbruck, Germany*

Abstract

Using several small, unconnected satellites flying in formation rather than a single monolithic satellite has many advantages. As an example, separate optical systems can be combined to function as a single larger (synthetic) aperture. When the aperture is synthesized, the independent optical systems are phased to form a common image field with its resolution determined by the maximum dimension of the array. Hence, a formation is capable of much finer resolution than it could be accomplished by any single element. In order for the formation to maintain its intended design despite present perturbations (formation keeping), to perform rendezvous maneuvers or to change the formation design (reconfiguration) control forces need to be generated. To this day, using chemical and/or electric thrusters are the methods of choice. However, their utilization has detrimental effects on small satellites' limited mass, volume and power budgets. In the mid-eighties, Caroline Lee Leonard published her pioneering work [1] proving the potential of using differential drag as a means of propellant-less source of control for satellite formation flight. This method consists of varying the aerodynamic drag experienced by different spacecraft, thus generating differential accelerations between them. Since its control authority is limited to the in-plane motion, Horsley [2] proposed to use differential lift as a means to control the out-of-plane motion. Due to its promising benefits, a variety of studies from researches around the world have enhanced Leonard's work over past decades which results in a multitude of available literature. Besides giving an introduction into the method the major contributions of this paper is twofold: first, an extensive literature review of the major contributions which led to the current state-of-the-art of different lift and drag based satellite formation control is presented. Second, based on these insights key knowledge gaps that need to be addressed in order to enhance the current state-of-the-art are revealed and discussed. In closer detail, the interdependence between the feasibility domain and advanced satellite surface materials as well as the necessity of robust control methods able to cope with the occurring uncertainties is assessed.

Keywords

Satellite aerodynamic; differential lift; differential drag; formation flight; rendezvous; propellant less control.

1. INTRODUCTION

Formation Flight (FF) of small satellites is a frequently discussed and investigated concept of distributing sensing applications such as atmospheric sampling, distributed antennas, and synthetic apertures required for a significant mission among small satellites to address complicated scientific objectives. Mission scenarios entailing multiple satellites offer significant enhancements and improvements in flexibility, robustness, and redundancy [3]. An up-to-date review of impending small satellite formation flying missions listing almost 40 missions can be found in [4].

Scharf defines formation flying as: *"a set of more than one spacecraft whose dynamic states are coupled through a common control law" [5, p.1]*. Furthermore, he declares that in particular, at least one member of the set has to track a desired state relative to another member and the tracking control law must depend upon the state of this other member and defines the second point as critical: e.g. even though specific relative positions are actively maintained, the GPS satellites form a constellation since their orbit corrections only require an individual satellite's position and velocity (state) [5]. In *Planetary Orbital Environments* (POE), one cannot define an arbitrary formation design but only one that is *legal*, i.e. permitted by the law of physics: *"To give an example: one cannot require two satellites to 'fly' side by side infinitely. Their*

[*] Corresponding author, PhD candidate, ctraub@irs.uni-stuttgart.de

paths will cross before they finish the first orbit. Nor can one require a satellite to 'fly' above or below another at the same speed. Satellites do not fly, they orbit" [6, p.384]. Legal satellite formation flying designs can be derived by using the linearized equations of relative motion for two objects under the influence of nothing but a point-mass gravitational field, commonly known as *Hill's equations* [7] or the *Clohessy-Wiltshire equations* (CW) [8] and expressed in the Local Vertical Local Horizontal (LVLH) rotating coordinate system centered at the reference spacecraft (also referred to as *target* or *chief*). In the course of this paper the LVLH coordinate system is defined following the definition of Vallado [9]: the $\hat{x}$-axis points from the Earth's center along the radius vector towards the chief satellite as it moves through the orbit. The $\hat{y}$-axis points in the direction of (not necessarily parallel to (in the case of non-circular orbits)) the velocity vector and is perpendicular to the radius vector. The $\hat{z}$-axis is normal to the orbital plane. A detailed derivation of the CW equations can be found in [9, p.394 - 398].

For the sake of simplicity, the derivation of the CW equations completely neglected natural perturbations. In reality, though, every orbital element dependent perturbation pulls the formation apart (invariant relative orbits exist [10] but they remain an exception). In order for the formation to keep its intended design despite the present perturbation (commonly referred to as *formation keeping* or *formation maintenance*), to perform *rendezvous maneuvers* or to change the formation design (*reconfiguration*) control forces need to be generated. Up until now the method of choice is to use chemical/electrical or cold gas thrusters. However, the limited availability of the propellant shortens the expected lifetime of a mission. This is especially critical in the case of CubeSats, which are subjected to very stringent mass and volume constraints. In addition, since they are frequently launched as 'secondary payloads', constraints on volumes and pressures of stored propellant, nominally to protect the primary payload, can limit the capability and/or availability of on-board propulsion systems [11]. Also, the related propellant exhaust might affect sensitive on-board sensors. As a consequence, propellant less techniques to generate control forces are of greatest interest for the CubeSat community. As will be shown in the next chapter, lift and drag forces experienced by satellites travelling through Earth's atmosphere in Low-Earth Orbit (LEO) as well as Very Low-Earth Orbit (VLEO, referring to altitudes < 450 km within the course of this paper) can be exploited as a means to control satellite formation flight. Moreover, other propellant less techniques, e.g. solar radiation pressure [12], the geomagnetic Lorentz force [13, 14] or inter-vehicle coulomb forces [15, 16], are envisaged as possible solutions to either reduce or even remove the need for an on-board propellant. However, the latter are not further considered in the course of this paper.

1.1. Differential Lift and Drag

The *Aerodynamic Drag* acting on a satellite can be expressed as a specific force (or acceleration) as [9]:

$$\vec{a}_{drag} = -\frac{1}{2}\frac{c_D A}{m}\rho v_{rel}{}^2 \frac{\vec{v}_{rel}}{|\vec{v}_{rel}|} \tag{1}$$

Here, c_D is the drag coefficient, ρ the atmospheric density, m the mass of the spacecraft and A the cross-sectional area normal to the satellite's velocity vector. The velocity vector $\vec{v}_{rel}$ is measured relative to the atmosphere taking the Earth's rotation and winds into account [8].

In orbital mechanics, the semi-major axis of a satellite orbiting around a central body defines its potential energy. As atmospheric drag dissipates energy from the system it inevitably causes orbital decay and eventually re-entry[1]. Therefore, it is usually considered a perturbation. Besides the environmental properties the magnitude of the drag acceleration strongly depends on the design of the satellite, which can be expressed by the so-called *ballistic coefficient* (BC) defined as $m/(c_D A)$. If the BCs of two spacecraft differ, both experience different drag accelerations and the formation deteriorates. Vice versa, a desired differential acceleration between formation flying satellites can be intentionally commanded via a respective delta in their BCs. This method is commonly referred to as *differential drag* and was first introduced by Leonard in 1986 [1]. Varying the mass is in general an irreversible process and therefore considered no option in the further course of this paper (however, see [18] for further insights). However, there are several options available to reversibly adjust the surface area exposed to the residual atmosphere. Leonard proposed to use dedicated drag plates (which could be e.g. solar panels) and to adjust the magnitude of the drag acceleration by rotating the plates. In this case, the satellites are assumed to have a constant attitude which is controlled by other means. A second option frequently discussed is to rotate the satellite itself e.g. by using reaction wheels. The latter postulates that the satellite is asymmetrically shaped such that a noticeable difference in the corresponding surface area can be created. The reaction wheels are expected to be powered by solar panels and thus not to consume propellant. The third possible solution is to use a dedicated drag sail similar to commercially available de-orbit sails. However, the sail needs to be opened and closed multiple times (see e.g. [19]). Despite its promising benefits the method entails several limitations:

1) The method is limited to VLEO and/or low LEO operations. As the density decreases with altitude, there is inevitably a maximum height for which a meaningful control authority is available.
2) The disturbance force caused by the J_2 effect of the Earth's oblateness[2] increases with the inter-satellite distance. Consequently, there exists a maximum separation distance up to which the formation is controllable.
3) Every control action inevitable cause orbital decay and there is no option available to reverse this process.
4) The extended maneuver times make the method infeasible for some applications.

[1] At the same time, its kinetic energy is increased. This phenomena is often referred to as satellite drag paradox [17]

[2] J_2 is the second order harmonic of Earth's gravitational potential field (Earth oblateness)

Its main disadvantage, however, is that its control authority is limited to the in-plane motion. The drag force in the out-of-plane direction (occurring for inclinations $i \neq 0$ due to the rotating atmosphere) is shown to be two orders of magnitude smaller even for highly inclined orbits [20] and unable to provide meaningful control authority. To bypass this disadvantage, Horsley [2] proposed to use *differential lift* as a means to control the out-of-plane relative motion in 2011. Most frequently, satellite lift (which acts perpendicular to drag) is assumed to be negligible (e.g. [21]). This is because satellites that are spinning/tumbling or satellites with certain symmetrical shapes tend to have the effect of aerodynamic lift cancel out. In addition, the lift coefficients c_L experienced so far are noticeably smaller than the drag coefficients [2]. However, by intentionally maintaining a constant attitude of the satellite relative to the velocity vector, the effects of aerodynamic lift is shown to essentially build up over time and generate measurable effects on the satellite orbit. This was first experienced during the analysis of the inclination of the S3-1 satellite in 1977 [22]. Moore studied the effects of aerodynamic lift on near circular satellite orbits in closer detail in 1985 [23].

Here, c is the SS coefficient which takes the J_2 influence into account. A, B and D are auxiliary variables used to simplify the equations (see (9)). R_E is the Earth's mean radius, ω is the angular velocity of the chief spacecraft's orbit, i_c its inclination and r_c its radius. x_0, y_0, z_0, $\frac{\dot{z}_0}{D\omega}$, α_0 and $\frac{\beta_0}{\sqrt{2cA}}$ are the initial conditions. a_x , a_y , a_z are the accelerations due to differential lift and drag.

The equations are expressed in the LVLH coordinate as previously defined.

In the linearized model, the in-plane motion ($\hat{x}$-$\hat{y}$-plane) is completely decoupled from the out-of-plane motion ($\hat{z}$-direction) and can be decomposed into a *double integrator* modelling the *average location* of the deputy with respect to the chief ($\bar{x}, \bar{y}$) as well as a *harmonic oscillator* modelling its *eccentricity* e ($e = \sqrt{\alpha^2 + \beta^2/2cA}$). The out-of-plane motion solely consists of a non-secular harmonic oscillator.

$$x = \bar{x} + \alpha \tag{2}$$

$$y = \bar{y} + \beta \tag{3}$$

$$z = \left(z_0 - \frac{a_z}{D^2\omega^2}\right)\cos(D\omega t) + \frac{\dot{z}_0}{D\omega}\sin(D\omega t) + \frac{a_z}{D^2\omega^2} \tag{4}$$

with $\bar{x}$, $\bar{y}$, α and β being defined as:

$$\bar{x} = \bar{x}_0 + \frac{A}{\omega}a_y t \tag{5}$$

$$\bar{y} = \bar{y}_0 + B\omega\bar{x}_0 t - \frac{A}{\omega}a_x t + \frac{AB}{2}a_y t^2 \tag{6}$$

$$\alpha = \left(\alpha_0 - \frac{Aa_x}{2c\omega^2}\right)\cos\left(\sqrt{\frac{2c}{A}}\omega t\right) + \left(\frac{\beta_0}{\sqrt{2cA}} - \frac{A^2 a_y}{2\omega^2}\right)\sin\left(\sqrt{\frac{2c}{A}}\omega t\right) + \frac{Aa_x}{2c\omega^2} \tag{7}$$

$$\frac{\beta}{\sqrt{2cA}} = \left(\frac{\beta_0}{\sqrt{2cA}} - \frac{A^2 a_y}{2\omega^2}\right)\cos\left(\sqrt{\frac{2c}{A}}\omega t\right) + \left(\frac{Aa_x}{2c\omega^2} - \alpha_0\right)\sin\left(\sqrt{\frac{2c}{A}}\omega t\right) + \frac{A^2 a_y}{2\omega^2} \tag{8}$$

The coefficients are defined as follows:

$$c = \sqrt{1 + \frac{3J_2R_E^2}{8r_c^2}(1 + 3\cos(2i_c))}, \qquad A = \frac{2c}{2-c^2}, \qquad B = \frac{2-5c^2}{2c} \qquad \text{and} \qquad D = \sqrt{3c^2 - 2} \tag{9}$$

Thus, by using differential drag and lift, the relative motion of spacecraft becomes controllable in all three translational degrees of freedom. This can be mathematically expressed using the *Schweighardt-Sedwig* (SS) model [24, 25]. Although being surprisingly similar in form to the CW equations, the linearized and constant-coefficient SS model is able to capture the influence of the J_2 potential. The solutions to an intermediate set of SS equations including differential lift and drag accelerations (equations (2)-(4)) are taken from [26] presented in the notation given by Smith [27].

The influence of differential lift and drag on the phase planes is displayed Fig. 1 to Fig. 3 (the figure design is taken from [26] but with adapted variable designation). Positive differential accelerations causes the state to move along the trajectories represented by the solid lines, negative differential accelerations along the dashed lines. Since the out-of-plane relative motion is completely decoupled from the in-plane motion, a differential lift in the $\hat{z}$-direction does not interfere with the in-plane motion at all (and vice versa aerodynamic forces in the $\hat{x}$- and $\hat{y}$-direction have no effects on the out-of-plane motion).

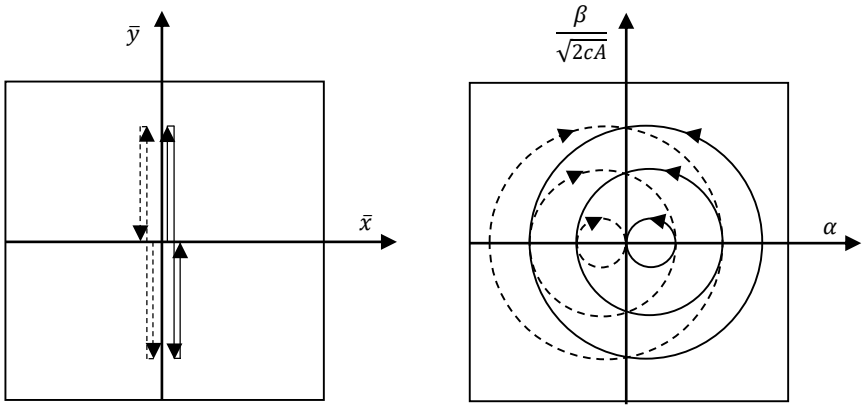

Fig. 1: Phase plane for differential lift in the $\hat{x}$-direction. A positive (negative) acceleration causes the state to move along the solid (dashed) trajectories.

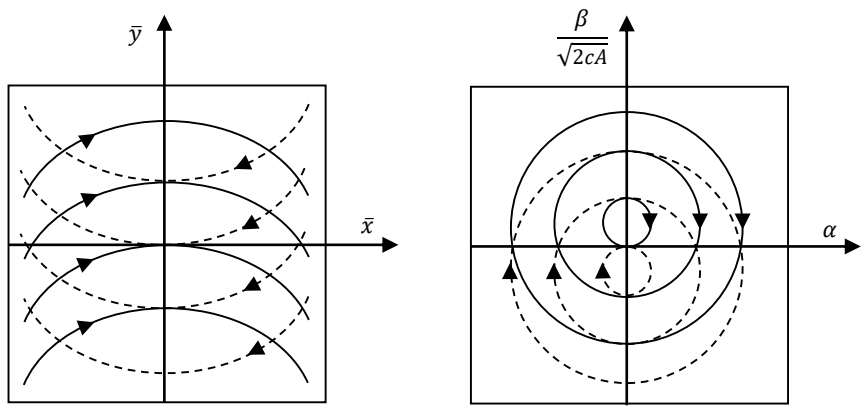

Fig. 2: Phase plane for differential drag in the $\hat{y}$-direction. A positive (negative) acceleration causes the state to move along the solid (dashed) trajectories.

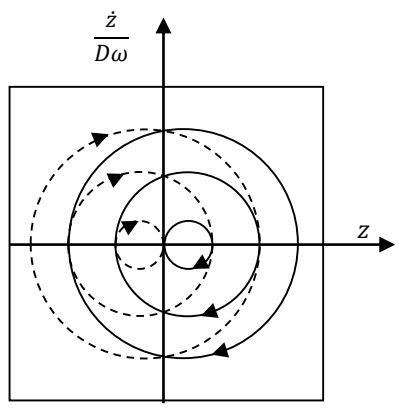

Fig. 3: Phase plane for differential lift in the $\hat{z}$-direction. A positive (negative) acceleration causes the state to move along the solid (dashed) trajectories.

2. LITERATURE REVIEW

Because of its promising benefits, differential drag methods were studied by a number of researchers for formation keeping / formation maintenance, rendezvous scenarios and re-phasing / reconfiguration purposes. In order to get a full picture of the developments and the current state-of-the-art, an extensive literature review was conducted and the main contributions leading to the state-of-the art are presented in the next sub-chapter. On a first level, the developments are sorted according to their formation flight scenario. Within the respective subcategories, the developments are listed chronologically. This review focusses on the theoretic developments of the control theories and does not include mainly project related publications. Also, using BC modifications for *reentry point targeting* [28–32] is not further discussed since it does not belong in the classical field of differential lift and drag.

Due to the ongoing research efforts and the multitude of available publications, the author can at no means guarantee for the completeness of the presented set of literature. However, the provided review most certainly covers the main efforts and provides a valuable overview of the progressions made. Unfortunately, some topic related articles were found but not accessible to the author [33–38].

2.1. Differential Drag

2.1.1. Rendezvous Scenario

In 1986, Leonard [1] published her pioneering work in which she used the CW equations to decompose the in-plane motion into a double integrator as well as a harmonic oscillator. The time-optimal control solution for each system alone is well known, using switch curves in the phase plane. Leonard combined both control laws in such way that all states are driven to the origin simultaneously [39]. The main control law drives the average position of the slave to the target while minimizing the eccentricity (phase one). The eccentricity-minimizing control scheme is activated once the average position of the slave is at the target (phase two); its purpose is to reduce the eccentricity of the slave as much as possible without jeopardizing its final average position. In 2008 B. Kumar [40] published a first attempt to rework Leonard's controller so that it is applicable in reality. In the same year, Bevilacqua and Romano [41, 42] proposed to improve Leonard's algorithm by replacing the CW equations by the recently developed SS equations. Furthermore, they developed an entirely analytic maneuver routine which is able to deal with an arbitrary number of spacecraft. In a follow up publication [43] published in 2010, the same authors introduced a two-phase hybrid controller. In 2011, Pérez [44] presented a Lyapunov control approach inspired by the previous work of one of the authors [45] to force the non-linear system to track the analytically created guidance trajectory. Furthermore, the authors enhanced the method in two follow-up publications in 2013 and 2014 [21, 46] making the Lyapunov control adaptive. In 2012 Lambert built upon B. Kumar's work [40] and further increased the applicability of Leonard's approach under practical conditions [47]. In the same year, Dell'Elce and Kerschen [48, 49] presented a two-step off-line optimal control strategy for a rendezvous maneuver in the course of the QB50 project proposed by *Von Karman Institute for Fluid Dynamics* [50]. Though achieved with a completely different approach, the solution is consistent with the oscillation reduction controller implemented by Lambert [47]. In the years 2014-2015, Dell'Elce and Kerschen improved their optimal control algorithm for the rendezvous scenario of two spacecraft in three successive publications [51–53]. In 2015, Spiller proposed an approach to search the suitable solution space using Inverse Particle Swarm Optimization (iPSO) [54–56]. Mazal [57] included (bounded) uncertainties in the drag acceleration in the development of controller for rendezvous maneuvers in 2016. Cho [58] developed a new chattering free sliding mode controller for the rendezvous scenario based on the insights from [53] in 2016. In the same year, Peréz [59] proposed using artificial neuronal networks to predict the future behavior of the density. The developments on the adaptive Lyapunov control strategies [21, 46] combined with the work on using artificial neuronal networks resulted in the PhD dissertation of one of the authors [60]. The method was further advanced in a follow-up publication [61] in the same year. For his achievements in the field of optimal control using swarm intelligence, Spiller received his PhD in 2018 [62].

2.1.2. Formation Keeping / Maintenance

In a follow-up paper to her master's thesis, Leonard addressed orbital formation keeping in 1987 [39]. Similar analysis was presented 1988 by Mathews and Leszkiewicz [63] as well as by Folta in 1996 [64]. In 2004, Fourcade analyzed using differential drag to control the mean nodal elongation between several satellites [65]. Jigang [66] developed a control method for the maintenance of co-plane formation based on a phase-plane analysis in 2006. Further progress in the field was made in the same year by a thesis from the *Air Force Institute of Technology* in which Wedekind [67] studied the effect of drag on different (uncontrolled) formation geometries. In a second part of the thesis, these effects were mitigated by using a simple proportional/integral (P/I) controller. With regard to the JC2Sat-FF mission, B. Kumar [68] investigated the feasibility of using differential drag and included a detailed analysis of the affecting parameters (2007). In his master's thesis from 2011, Bellefeuille compared different control techniques for the formation maintenance using differential drag [69]. Zeng proposed a new control scheme for formation keeping, including the triple-impulse strategy for the in-plane motion, the single- impulse manoeuvre for the cross-track motion, and the time-optimal aerodynamic control for the along-track separation in 2012 [70]. K. Kumar analyzed using aerodynamic forces as well as solar radiation pressure as a means of control for formation maintenance in 2014 [71].

2.1.3. Reconfiguration

Hajovsky [72] used the CW equations to develop a linear-quadratic terminal controller for reconfiguration purposes in 2007. In his dissertation published in 2011 [73], Varma addressed using aerodynamic drag as well as solar radiation pressure to control satellite formation flight. He developed control algorithms based on adaptive sliding mode control techniques and validates them for formation maintenance as well as reconfiguration using dynamic simulations. In addition,

he investigated the feasibility of multiple satellite formation flying and reconfiguration. In 2013, Pérez transferred the adaptive Lyapunov control approach used for rendezvous scenarios ([21, 46]) to be applicable for the control of fly-around and re-phasing maneuvers [74]. In 2014, Bevilacqua presented a framework combining analytical guidance solutions for short distance re-phasing based on along track, on-off control (developed in [75]) with the adaptive Lyapunov control method presented in ([21, 46]) [76]. The guidance is created using input-shaping. In 2015, Pastorelli [77] proposed a novel technique to perform chaser-target spacecraft relative maneuvers while simultaneously stabilizing the chaser's attitude with respect to the LVLH coordinate system centered at its body center of mass. His analysis contained rendezvous as well as re-phasing maneuvers. In 2017, Spiller presented an approach of exploiting atmospheric drag and solar radiation pressure. Again, iPSO is used. The method is shown to be applicable for circular formation reconfiguration as well as an along-track reconfiguration [78].

2.2. Differential Lift and Drag

2.2.1. Rendezvous Scenario

Even though the method of differential drag is being actively researched since 1986, it was not until 2011 that Horsley proposed atmospheric lift as a means to control the out-of-plane motion [2, 79] in order to achieve rendezvous. In his first publication [2] Horsley assumed the in-plane motion to have already been controlled by other means and focusses on controlling the residual harmonic motion in the out-of-plane direction ($\hat{z}$-direction). Combining the results from [1, 39] and the insights presented in [2], three successive phases are necessary to achieve a rendezvous solely by exploiting aerodynamic forces. These three phases are referred to as follows in the further course of this paper:

1) In the *first phase*, the double integrator of the in-plane motion is controlled (average position)
2) In the *second phase*, the harmonic-oscillator of the in-plane relative motion is controlled (eccentricity)
3) In the *third phase*, the harmonic-oscillator of the out of plane motion is controlled.

Since the in-plane relative motion is coupled, the eccentricity (phase two) can be controlled by either differential drag or lift (see Fig. 3 and 4). In a follow up publication [79], Horsley compares both possible control options. For his set of initial condition analyzed, differential lift lead to a 40% shorter maneuver time. This is because, in this case, the symmetric nature of the drag-only maneuver requires an excessive coast period whereas the in-plane differential lift maneuver does not require any coasting time and the control can be executed immediately. In addition, the effect of drag in terms of orbital decay could be reduced by about 30%.

In 2015, Shao [26] enhanced Horsley's algorithm by replacing the CW equations with an intermediate set of the SS equations (see equations (2) to (8)). Thereby, the influence of the J_2 effect is taken into account. The general structure of the control algorithm remained unchanged.

Only recently (2017), when analyzing the practicability of the just described control algorithms, Smith [27] revealed that the control sequence inevitably leads to a collision which could cause catastrophic damage to the spacecraft and thus describes the existing differential lift-based rendezvous algorithms as impractical. He solved the issue by rearranging the order in which rendezvous is achieved: In the reworked order, the out-of-plane motion is zeroed out before the eccentricity in the in-plane is. By doing so, collisions are eliminated. In addition, the author analyzed the feasibility of achieving the rendezvous condition for a variety of different initial conditions via a Monte Carlo approach. The analysis showed that Horsley's statement, according to which the maneuver time of phase two can be reduced by using lift rather than drag, is only true for a very limited set of initial conditions. And even if, the ability to perform the second phase faster does not guarantee that the overall rendezvous time will be faster. In addition, the performed MC analysis revealed that even though it is possible to use differential lift for the second phase, it is generally an inferior process compared to the use of differential drag both in terms of maximum range as well as total rendezvous maneuver time. Therefore, the author concludes that in planning practical spacecraft rendezvous, differential drag should be considered for in-plane components of rendezvous due to its higher reliability, larger practical range, and generally faster maneuver times [27].

2.2.2. Formation Keeping / Maintenance

In 2017, Shao [80] presented an Lyapunov-based control approach for formation keeping using aerodynamic drag and lift (controller design taken from [3]). The presented controller forces the satellite relative motion to track a analytically generated formation geometry using the CW equations. In addition, the paper analyses the feasibility domain of the method. The two limits considered, resulting from a trade-off between disturbing J_2 force and available control authority, are the maximum altitude of the formation and the maximum inter-satellite distance (the formation size). In the same year, Sun [81] investigated the problem of controlling both translational and rotational motions for small-satellite formation using aerodynamic drag and lift. In an example test case, the orbit control is implemented to maintain the formation during the maneuver whereas the attitude has to be constantly adjusted in order to accurately point in the direction of the chief. In follow-up publications [82, 83], the same author presented a neural network-based adaptive sliding mode controller which accounts for system uncertainties and external perturbations.

2.2.3. Re-Phasing / Reconfiguration

In 2018, Ivanov presented a Linear-Quadratic Regulator based control algorithm for satellite formation flying using aerodynamic forces. The satellite attitude relative to the incoming flow that provides the required aerodynamic forces is calculated using a simple aerodynamic model. For given model parameters the acceptable control region is obtained. The ability of the controller to transit the formation from one closed relative trajectories into another is validated via numerical simulations [84].

3. GAP ANALYSIS

The research effort so far was mainly focusing on differential drag and only very little insight into differential lift is available. This chapter reveals key gaps in the field of differential lift which have to be addressed in order to make progress in the current state-of-the-art and eventually to make the method an applicable option for propellant-less rendezvous in a real mission scenario.

3.1. Feasibility Domain

Differential lift is a promising method since it not only enables to control all three translational degrees of freedom (in combination with differential drag) but also to mitigate a main disadvantage of differential drag, which is the accompanying and often unwanted orbital decay. However, as the analysis conducted by Smith [27] has shown, using differential lift for controlling the eccentricity of the in-plane motion is an inferior approach compared to using differential drag both in terms of maximum range as well as of resulting maneuver time. Its reduced control authority limits the feasibility domain of initial conditions that lead to a successful rendezvous. As Smith states: *"The condition for successful rendezvous using Horsley's or Shao's et al.'s algorithm for phase 2 is dependent on the magnitude of the α and $\beta/\sqrt{2cA}$ components at the start of phase 2. [...] the maximum range for the magnitude of the α and $\beta/\sqrt{2cA}$ components at the start of phase 2 is approximately 35 m for successful rendezvous for both Horsley's and Shao's algorithm."* [27, p. 2685]. Therefore, when planning practical spacecraft rendezvous Smith recommends that differential drag should be used for controlling the eccentricity due to its higher reliability, larger practical range, and generally faster maneuver time.

Whereas these insights are certainly true for the analyzed boundary conditions, there are different options available to increase the feasibility domain. The term feasibility domain, as it is referred to in the further course of this paper is defined as the maximum inter-satellite distance and/or maneuver altitude for which the control algorithm leads to a successful rendezvous. Two different options will be discussed in the following.

3.1.1. Sawtooth Pattern

A first option is to refine the rendezvous algorithm during phase one so that it decreases the magnitude of the α and $\beta/\sqrt{2cA}$ components at the beginning of phase two. Since the latter is the key criterion for the maneuver success, this would inevitably increase the feasibility domain.

A suitable option is to implement a so called *sawtooth pattern* (originally developed by Leonard [1, 39] using the CW equations) during phase one. The basic idea behind is as follows: once the average position is moving towards the origin, the control law differs from the minimum time solution of a double integrator in order to reduce the eccentricity. In the case of the SS equations, the rate of change of the eccentricity slightly deviates from Leonard's solution (see (10)), but her general statement according to which: *"[...] the eccentricity is reduced whenever the control a_y has the same sign as α* " [39, p. 110] is still valid:

$$\frac{d(e^2)}{dt} = -\frac{\sqrt{2cA^3}}{\omega} a_y \alpha \tag{10}$$

For both values to have the same sign, a_y must change sign when α changes sign, which is twice each orbit. Thus, the state moves in a sawtooth pattern towards the appropriate switch curve in the ($\hat{x}$, $\hat{y}$) plane. Obviously, since the commanded control differs from the time-optimal solution, this leads to higher maneuver times.

Both, Horsley and Shao so far completely neglected a sawtooth pattern so that there is currently no insight on how this method could increase the feasibility domain.

3.1.2. Increased Lift Forces

A second possible option to enlarge the feasibility domain is to increase the control authority of differential lift by developing enhanced materials targeting to increase the magnitude of the available lift forces.

The DISCOVERER project[§] [85], a Horizon 2020 funded research project consisting of nine international partners including those in the author list, aims to radically redesign Earth observation satellites for sustained operation at much lower altitudes than the current state of the art [86] by using a combination of new aerodynamic materials, aerodynamic control and atmosphere-breathing electric propulsion (ABEP) for drag-compensation [87]. A main goal is to identify and develop materials which encourage specular or quasi-specular reflection (see Fig. 4) [85].
The residual atmosphere above 200 km is so rarefied that the mean free path of the gas molecules greatly exceeds the typical dimensions of a satellite. Thus, it cannot be considered a continuous fluid but rather a free molecular flow (FMF). In this FMF regime, the residual atmospheric gas needs to be considered particulate in nature and features very few collisions between constituent molecules.
The forces and torques occurring on a free body under FMF conditions are principally produced by the energy exchange taking place between the incident gas particles and the external surfaces. These Gas-Surface-Interactions (GSI) are dominated by the material chemistry with the predominant gas species in the VLEO range (<250 km), atomic oxygen, adsorbing to, and possibly eroding, the surface.
The nature of this interaction is known to be dependent on surface roughness/cleanliness, surface molecular composition and lattice configuration, surface temperature, incident gas composition and velocity and angle [85].

When the incoming molecules strike a clean surface, they are emitted near the specular angle with a partial loss of their

[§] *Disruptive Technologies for Very Low Earth Orbit Platforms*, https://discoverer.space/

kinetic energy. However, when the surface becomes heavily contaminated with adsorbed molecules (the term adsorption refers to the trapping of molecules on surfaces), the incident molecules are reemitted in a diffuse distribution, losing a large portion of their incident kinetic energy [88].

In order to describe this phenomena in its entirety, different coefficients need to be introduced. How close the kinetic energy of the incoming molecules are adjusted to the thermal energy of the surface is expressed in the *energy/thermal accommodation coefficient* α, which is defined as:

$$\alpha = \frac{E_i - E_r}{E_i - E_w}, \tag{11}$$

where E_i is the kinetic energy of the incident molecule, E_r is the kinetic energy of the reemitted molecule; and E_w is the kinetic energy the reemitted molecule would have if it left the surface at the surface (wall) temperature. The *tangential* (eq. (12)) and *normal* (eq. (13)) *momentum accommodation coefficients* are used to parametrize the momentum transfer in GSI [89]. They are defined as: [90]:

$$\sigma = \frac{\tau_i - \tau_r}{\tau_i - \tau_w}, \qquad (\tau_w = 0) \tag{12}$$

$$\sigma' = \frac{p_i - p_r}{p_i - p_w}, \tag{13}$$

where τ and p are the tangential and normal momentum coefficients. The subscripts $_i$ and $_r$ refer to the incident and reflected flux while τ_w and p_w denote the tangential and normal momentum coefficients of the molecules which are reemitted with a Maxwellian distribution at the surface temperature T_w.

For the hypothetical case of an entirely specular reflection with vanishing energy exchange one would have $\alpha = \sigma = \sigma' = 0$ while for the entirely diffuse reflection which hase been completely accommodated to the surface temperature T_w one would have $\alpha = \sigma = \sigma' = 1$ [90]. Whilst the fundamental molecular interactions of atomic oxygen with spacecraft surfaces are poorly understood, its impact on the aerodynamic performance of a surface is significant: Adsorbed molecules increase energy accommodation and broaden the angular distribution of molecules reemitted from the surfaces [91]. In addition, the surface erosion due to the collision with energetic and reactive particles (primarily atomic oxygen) can also increase the energy accommodation.

.

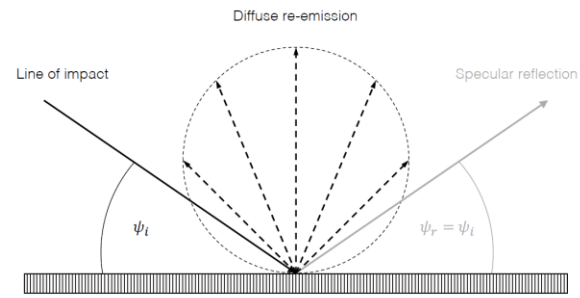

Fig. 4: Specular ($\sigma = 0$) anddiffuse ($\sigma = 1$) reemitted particle fluxes

Typical energy accommodation coefficients experienced in LEO are in the range 0.85 to 1.00 [88, 92]. Therefore, it is expected that the application of specular or quasi-specular reflecting materials will provide higher lift-to-drag ratios. Fig. 5 depicts how the lift and drag coefficients of a plate at different incidence angles are affected by the accommodation coefficient at an altitude of 400 km and a wall temperature T_w of 300 K according to Sentman's model [93], which assumes diffuse reflection ($\sigma = 1$). Even though the drag coefficient moderately increases with decreasing energy accommodation coefficients (especially for low incidence angles), too, the increase in the lift coefficient is way more significant. Consequently, higher lift-to-drag ratios are achievable if energy accommodation can be reduced (see Fig. 6). To provide an upper limit of what could be feasible with advanced materials Fig. 7 depicts the lift to drag ratio of a flat plate using a model which assumes ideal reflection ($\alpha = 0$, no energy transfer) for both fully specular ($\sigma = 0$) and fully diffuse ($\sigma = 1$) reflection [94, p. 170]. For fully diffuse reflections the maximum lift to drag ratio is limited to $C_L/C_D < 0{,}2$. For fully specular reflections, though, lift to drag ratios $C_L/C_D > 2$ could be achieved [95].

So far, the limiting factor preventing research in this area has been the lack of experimental data. There has been neither systematic campaigns to obtain data from on-orbit experiments nor a facility capable of reproducing and measuring these interactions on the ground. Whilst hyperthermal atomic oxygen sources exist for accelerated material erosion testing, these are typically performed at much higher flow rates, use a carrier gas, or are pulsed, all of which change the flow regime and the fundamental nature of the interaction with the surface for aerodynamics. DISCOVERER proposes a two-fold approach to the problem: Firstly, an entirely novel hyperthermal atomic oxygen wind tunnel will be developed, built, commissioned and operated allowing the testing of materials in a representative flow environment. Secondly, a small test spacecraft will be developed and flown to provide truth data for the ground-based experimental results [85].

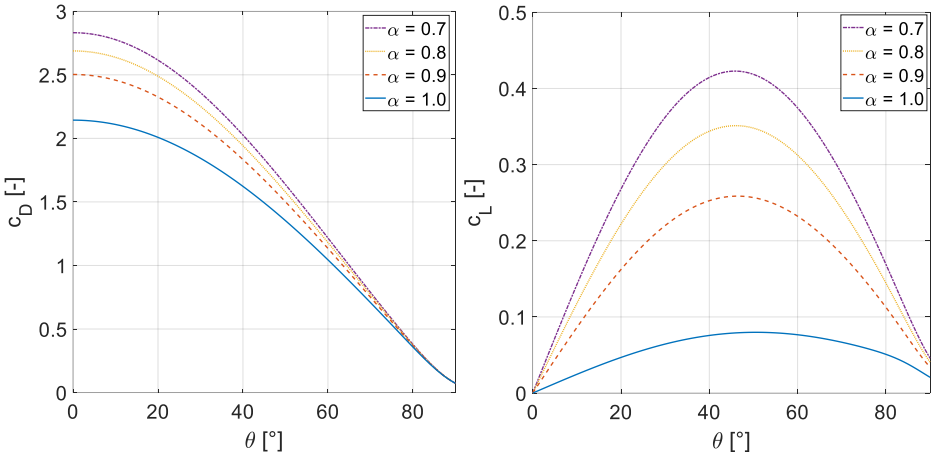

Fig. 5: Drag and lift coefficients for a flat plate at different incidence angles θ and energy accommodation coefficients α calculated using Sentman's GSI model [93], which assumes diffuse reflection, at an altitude of 400 km and a wall temperature T_w of 300 K

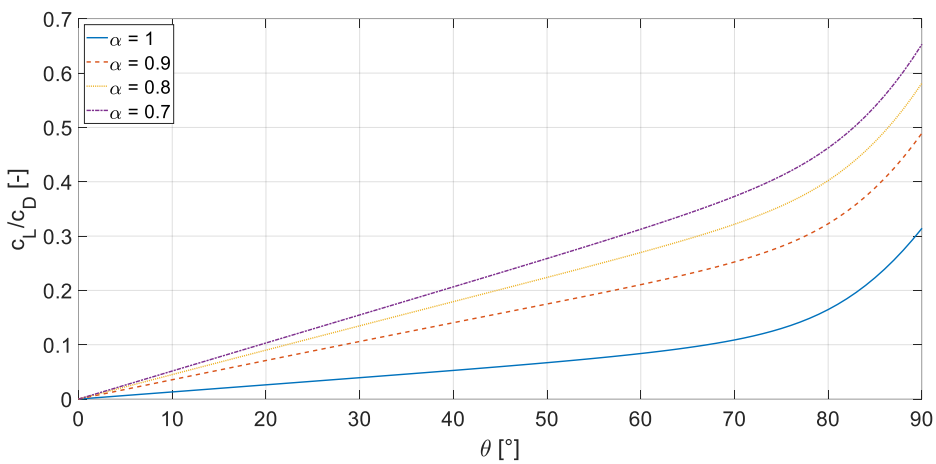

Fig. 6: *Lift to drag ratio for a flat plate at different incidence angles θ and energy accommodation coefficients α calculated using Sentman's GSI model [93], which assumes diffuse reflection, at an altitude of 400 km and a wall temperature T_w of 300 K*

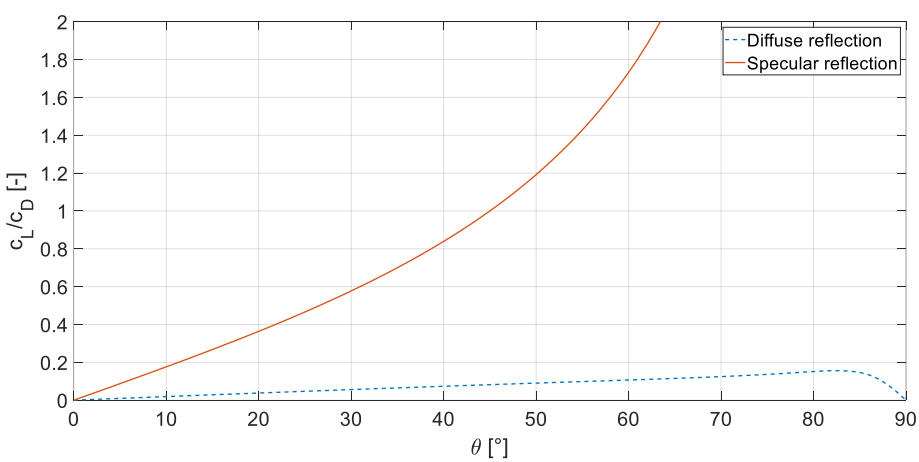

Fig. 7: Lift to drag ratio for a flat plate at different incidence angles θ calculated using a GSI model which assumes ideal ($\alpha = 0$, no energy transfer) and fully specular ($\sigma = 0$) or fully diffuse ($\sigma = 1$) reflection [94, p.170] at an altitude of 400 km

The expected increase in the magnitude of the available lift force due to enhanced materials would drastically increase the feasibility domain of differential lift but at the same time also decrease the respective maneuver times. Thus, Smith's [27] statement according to which differential lift for the in-plane relative motion control of a rendezvous scenario is an inferior approach compared to differential drag needs to be re-evaluated for materials specifically optimized to create large-lift-to-drag ratios. Besides the feasibility domain and the maneuver time, the orbital decay can be used as a third trade-off criteria. In addition, the interdependence of the available lift-forces and the maneuver times for the out-of-plane relative motion control has not yet been analyzed at all.

3.2. Coping with Uncertainties

A major challenge in exploiting environmental forces for satellite relative motion control is that exact values for the available drag and lift forces are hard to predict. Both are functions of the atmospheric density, atmospheric winds, the velocity of the spacecraft relative to the medium, the spacecraft's geometry, its attitude, its drag coefficient and its mass. The interdependence of these parameters (e.g. the drag coefficient is affected by the temperature of the medium which also influences its density) and the lack of knowledge in some of their dynamics make the controller design, the modelling of the available control forces and therefore the design of realistic guidance trajectories a challenging problem [21]. In the field of differential drag, effort was done by several researchers to cope with the occurring uncertainties. The most promising approaches will be presented and shortly discussed in the following. They can function as a guiding principle for the controller developments in the field of differential lift.

3.2.1. Development of Robust Control Techniques

The analytic rendezvous controllers proposed so far [2, 26] are not at all able to cope with the occurring uncertainties. Also, the robustness of the Lyapunov-based controller developed for formation keeping purposes presented in [80] is questionable since it assumes constant environmental conditions and therefore a priori known maximum available lift and drag accelerations. Consequently, modifications should be made to adopt viable strategies that are invariant to disturbances and uncertainties.

In 2011, Pérez [44] presented a Lyapunov control approach to force the non-linear system to track the analytically created guidance trajectory. The sequence of differential accelerations is designed so that the time derivative of the Lyapunov function of the tracking error remains negative while the dynamics of the spacecraft tracks the linear reference model. In order to do so, the SS model needed to be stabilized using a Linear Quadratic Regulator feedback controller first. In [21, 46], the author furthermore showed that there exists an analytical expression for the differential drag acceleration critical value that ensures stability in the sense of Lyapunov for the system. Based on these insights, a modification strategy is derived that reduces the critical value and thereby increases the overall robustness of the controller with regard to uncertainties.

A different example for robust control techniques is the optimal control approach developed by Dell'Elce and Kerschen which was developed and enhanced over a multitude of publications [48, 49, 51–53, 96, 97]. Although varying slightly in the detailed implementations, the main strategy consists of three different modules: in a first step, a so called drag estimator evaluates the ballistic coefficient of the satellites. In a second step the maneuver planner schedules an optimal reference trajectory by means of a direct transcription. The used objective function avoids bang–bang-like solutions so that on-line compensation can provide two-sided maneuverability. In the third step, the on-line compensator corrects the deviations from the reference trajectory due to unmolded dynamics and uncertainties.

3.2.2. Design of Realistic Guidance Trajectories

The following insights were taken from [98, 99]. Uncertainties in the atmospheric density forecast results in errors in guidance trajectories, hence, any improvement in the atmospheric density forecast will make the guidance trajectories more realistic. Due to the fact that global atmospheric models are often designed to calculate more than just the density they most frequently come at a higher computation time and less accurate results for a specific quantity. A critical assessment of atmospheric modelling can be found in [62]. This can be circumvented by using a localized density model as originally proposed by Stastny [100] which is limited to calculate the density along the orbit of a single spacecraft. Thereby, the accuracy of the results can be greatly enhanced. A similar approach is developed in [98, 99]. However, instead of using a linear model as the predictor, artificial neuronal networks are used. In 2016, Peréz [59] used the predicted density to design realistic differential drag-based reference trajectories for relative maneuvers. The results showed that the calculated trajectories using the just described method can be tracked more closely.

The following insights were taken from [61, 101]. In [59], the atmospheric density is considered as time-dependent but independent of the location. The authors consequently develop a method called spatiotemporal resolution, which reflects the dependence of the density on both spatial and temporal differences [61, 101]. "*Spatiotemporal resolution can be achieved by propagating multiple orbits of spacecraft using a density forecast/estimate, varying the ballistic coefficient for each one. The density-location pairs result in the creation of a density field. The latter can be obtained on the ground prior to the maneuver, and uploaded at an opportune time. Interpolating the uploaded density field allows the creation of a relative guidance trajectory*" [61, p.42]. The addition of spatial-temporal resolution is shown to reduce the density estimation error compared to using a single forecasted trajectory [61, 101].

3.3. Multiple Satellites / Collision Avoidance

The application of the proposed methods were only studied for the relative motion of two satellites. Thus, an extension of the method towards being able to include multiple ($2+n$, $n \in \mathbb{N}$) satellites could have a significant contribution to potential practical application of the concept. The latter also promotes the development of *collision avoidance* techniques.

4. CONCLUSION

Using several small, unconnected, co-orbiting satellites rather than a single monolithic satellite strongly enhances the robustness, flexibility and redundancy of satellite missions. However, due to their tight volume and mass constrains other solutions than using chemical thrusters to withstand given natural perturbations and/or to perform reconfiguration maneuvers are of highest interest. In VLEO as well as low LEO, atmospheric forces are a possible solution for propellant-less relative motion control. After giving an introduction into the topic, this paper presents a literature review on the developments in the field of differential drag as well as a combined approach of differential lift and drag. Since lift acts perpendicular to drag, the latter offers the unique possibility to propellant-less control both in-plane as well as out-of-plane relative motion and in addition to mitigate the orbital decay caused by the control actions. While differential drag is thoroughly developed and even proven to be successful in reality, using differential lift and drag is only poorly studied. Based on these insights, several key knowledge gaps that need to be addressed in order to enhance the current state-of-the-art are revealed. A main gap is the analysis of the interdependence of the feasibility domain of differential lift controlled maneuvers (e.g. the maximum separation distance or the maximum maneuver altitude) and the achievable lift-to-drag ratios. Despite its potential, differential lift is currently the inferior option due to its lower control authority. However, research efforts conducted in the course of the DISCOVERER project aim to develop materials which encourage specular or quasi-specular reflection. It is expected that the application of the developed materials will provide higher lift-to-drag ratios so that the so far performed analysis needs to be re-evaluated. Increased available lift forces drastically enhance not only the feasibility domain of differential lift but also the respective maneuver times. An interdependence of the respective parameters, however, has not been analyzed at all. In addition, the robustness of the control strategies proposed up to now is questionable and needs to be modified so that it is invariant to disturbances and uncertainties. Once the control theory for all use cases is developed, an extension of the method to an arbitrary number of satellites as well as collision avoidance strategies need to be developed.

5. ACKNOWLEDGMENTS

This project has received funding from the European Union's Horizon 2020 research and innovation program under grant agreement No. 737183. This reflects only the author's view and the European Commission is not responsible for any use that may be made of the information it contains.

References

[1] C. L. Leonard, "Formationkeeping of Spacecraft via Differential Drag," Master Thesis, Massachusetts Institute of Techology, 1986.

[2] M. Horsley, "An Investigation into using Differential Drag for Controlling a Formation of CubeSats," *Advanced Maui Optical and Space Surveillance Technologies Conference*, 2011.

[3] R. Kristiansen and P. J. Nicklasson, "Spacecraft formation flying: A review and new results on state feedback control," *Acta Astronautica*, vol. 65, no. 11-12, pp. 1537–1552, 2009.

[4] S. Bandyopadhyay, G. P. Subramanian, R. Foust, D. Morgan, and S.-J. Chung, "A Review of Impending Small Satellite Formation Flying Missions," *53rd AIAA Aerospace Sciences Meeting*, 2015.

[5] D. P. Scharf, F. Y. Hadaegh, and S. R. Ploen, "A survey of spacecraft formation flying guidance and control (part I): Guidance: Guidance," in *Proceedings of the 2003 American Control Conference: ACC : June 4-6, 2003, the Adams Mark Hotel, Denver, Colorado, USA*, Denver, Colorado, USA, 2003, pp. 1733–1739.

[6] H.-H. Yeh and A. Sparks, "Geometry and control of satellite formations," in *Proceedings of the 2000 American Control Conference. ACC (IEEE Cat. No.00CH36334)*, Chicago, IL, USA, 2000, 384-388 vol.1.

[7] G. W. Hill, "Researches in the Lunar Theory," *American Journal of Mathematics*, vol. 1, no. 1, p. 5, 1878.

[8] W.H. Clohessy and R. Wiltshire, "Terminal Guidance System for Satellite Rendezvous," *Journal of the Aerospace Sciences*, vol. 27, no. 9, pp. 653–658, 1960.

[9] D. A. Vallado and W. D. McClain, *Fundamentals of astrodynamics and applications,* 4th ed. Hawthorne, CA: Published by Microcosm Press, op. 2013.

[10] H. Schaub and K. T. Alfriend, "J2 Invariant Relative Orbits for Spacecraft Formations," *Celest Mech Dyn Astr*, vol. 79, no. 2, pp. 77–95, 2001.

[11] N. H. Crisp, K. Smith, and P. Hollingsworth, "Launch and deployment of distributed small satellite systems," *Acta Astronautica*, vol. 114, pp. 65–78, 2015.

[12] T. Williams and Z.-S. Wang, "Uses of solar radiation pressure for satellite formation flight," *Int. J. Robust Nonlinear Control*, vol. 12, no. 2-3, pp. 163–183, 2002.

[13] S. Tsujii, M. Bando, and H. Yamakawa, "Spacecraft Formation Flying Dynamics and Control Using the Geomagnetic Lorentz Force," *Journal of Guidance, Control, and Dynamics*, vol. 36, no. 1, pp. 136–148, 2013.

[14] M. A. Peck, B. Streetman, C. M. Saaj, and V. Lappas, "Spacecraft Formation Flying using Lorentz Forces," (en), *Journal of the British Interplanetary Society*, vol. 60, pp. 263–267, 2007.

[15] H. Schaub, G. G. Parker, and L. B. King, "Challenges and Prospects of Coulomb Spacecraft Formations," *Advances in the Astronautical Sciences 115(1)*.

[16] L. King, G. Parker, S. Deshmukh, and J. Chong, "Spacecraft Formation-flying using Inter-vehicle Coulomb Forces," *Final report for Phase I research*

sponsored by NIAC – NASA Institute for Advanced Concepts, 2002.
[17] L. Blitzer, “Satellite Orbit Paradoxon A general View,” *Am. J. Phys., Vol. 39, 1971,*, p. 887., 1971.
[18] D. Ivanov, M. Ovchinnikov, and S. Shestakov, “Satellite formation flying control by mass exchange,” *Acta Astronautica*, vol. 102, pp. 392–401, 2014.
[19] C. Mason *et al.,* “Origami-Based Drag Sail for CubeSat Propellant-Free Maneuvering,” *5th Nano-Satellite Symposium*, 2013.
[20] O. Ben-Yaacov and P. Gurfil, “Stability and Performance of Orbital Elements Feedback for Cluster Keeping Using Differential Drag,” *The Journal of the Astronautical Sciences*, vol. 61, no. 2, pp. 198–226, 2014.
[21] D. Pérez and R. Bevilacqua, “Differential drag spacecraft rendezvous using an adaptive Lyapunov control strategy,” *Acta Astronautica*, vol. 83, pp. 196–207, 2013.
[22] B. K. Ching, D. R. Hickman, and J. M. Straus, “Effects of atmospheric winds and aerodynnamic lift on the inclination of the orbit of the S3-1 satellite,” *Interim Report, Space and Missle Systems Organization Air Force System Command*, 1976.
[23] P. Moore, “The effect of aerodynamic lift on near-circular satellite orbits,” *Planetary and Space Science*, vol. 33, no. 5, pp. 479–491, 1985.
[24] S. Schweighart, “Development and Analysis of a High Fidelity Linearized J2 Model for Satellite Formation Flying,” Master's Thesis, Massachusetts Institute of Techology, Boston, 2001.
[25] S. A. Schweighart and R. J. Sedwick, “High-Fidelity Linearized J2 Model for Satellite Formation Flight,” *Journal of Guidance, Control, and Dynamics*, vol. 25, no. 6, pp. 1073–1080, 2002.
[26] X. Shao, M. Song, D. Zhang, and R. Sun, “Satellite rendezvous using differential aerodynamic forces under J2 perturbation,” *Aircraft Eng & Aerospace Tech*, vol. 87, no. 5, pp. 427–436, 2015.
[27] B. Smith, R. Boyce, L. Brown, and M. Garratt, “Investigation into the Practicability of Differential Lift-Based Spacecraft Rendezvous,” *Journal of Guidance, Control, and Dynamics*, vol. 40, no. 10, pp. 2682–2689, 2017.
[28] R. Patera, “Drag Modulation as a Means of Mitigating Casualty Risk for Random Reentry,” in *AIAA Atmospheric Flight Mechanics Conference and Exhibit*, San Francisco, California, 2005.
[29] S. Alemán, “Satellite reentry control via surface area amplification,” Master Thesis, Air Force Institute of Technology, 2009.
[30] J. Virgili-Llop, P. C. E. Roberts, and N. C. Hara, “Atmospheric Interface Reentry Point Targeting Using Aerodynamic Drag Control,” *Journal of Guidance, Control, and Dynamics*, vol. 38, no. 3, pp. 403–413, 2015.
[31] S. R. Omar and R. Bevilacqua, “Spacecraft De-Orbit Point Targeting using Aerodynamic Drag,” in *AIAA Guidance, Navigation, and Control Conference*, Grapevine, Texas, 2017, p. 9.
[32] S. R. Omar *et al.,* “Spacecraft Deorbit Point Targeting Using Aerodynamic Drag,” *Journal of Guidance, Control, and Dynamics*, vol. 40, no. 10, pp. 2646–2652, 2017.
[33] S. Varma and K. D. Kumar, “Satellite Formation Flying using Differential Aerodynamic Drag,” in *Proceedings of the 20th AAS/AIAA Space Flight Mechanics Meeting - AAS10-11*, San Diego, CA, 2010.
[34] S. Varma and K. D. Kumar, “Satellite Formation Flying using Solar Radiation Pressure and/or Aerodynamic Drag,” in *Proceedings of the 12th International Space Conference of Pacific-basin Societies (ISCOPS)*, Montreal, Quebec, Canada, 2010.
[35] S. Varma and K. D. Kumar, “Multiple Satellite Formation Flying Using Differential Aerodynamic Drag,” *Journal of Spacecraft and Rockets*, vol. 49, no. 2, pp. 325–336, 2012.
[36] M. W. Harris and B. Açıkmeşe, “Minimum Time Rendezvous of Multiple Spacecraft Using Differential Drag,” *Journal of Guidance, Control, and Dynamics*, vol. 37, no. 2, pp. 365–373, 2014.
[37] S. Chesi, Q. Gong, and M. Romano, “Aerodynamic Three-Axis Attitude Stabilization of a Spacecraft by Center-of-Mass Shifting,” *Journal of Guidance, Control, and Dynamics*, vol. 40, no. 7, pp. 1613–1626, 2017.
[38] D. Mishne and E. Edlerman, “Collision-Avoidance Maneuver of Satellites Using Drag and Solar Radiation Pressure,” *Journal of Guidance, Control, and Dynamics*, vol. 40, no. 5, pp. 1191–1205, 2017.
[39] C. L. Leonard, W. Hollister, and E. Bergmann, “Orbital formationkeeping with differential drag,” *Journal of Guidance, Control, and Dynamics*, vol. 12, no. 1, pp. 108–113, 1987.
[40] B. S. Kumar and A. Ng, “A Bang-Bang Control Approach to Maneuver Spacecraft in a Formation with Differential Drag,” in *AIAA Guidance, Navigation and Control Conference and Exhibit*, Honolulu, Hawaii, 2008, pp. 1–25.
[41] R. Bevilacqua and M. Romano, “Rendezvous Maneuvers of Multiple Spacecraft Using Differential Drag Under J2 Perturbation,” *AIAA Guidance, Navigation and Control*, 2008.
[42] R. Bevilacqua and M. Romano, “Rendezvous Maneuvers of Multiple Spacecraft Using Differential Drag Under J2 Perturbation,” *Journal of Guidance, Control, and Dynamics*, vol. 31, no. 6, pp. 1595–1607, 2008.
[43] R. Bevilacqua, J. S. Hall, and M. Romano, “Multiple Spacecraft Rendezvous Maneuvers by Differential Drag and Low Thrust Engines,” *Celestial Mechanics and Dynamical Astronomy*, vol. 106, no. 1, pp. 69–88, 2010.
[44] D. Pérez and R. Bevilacqua, “Lyapunov-Based Spacecraft Rendezvous Maneuvers using Differential Drag,” *AIAA Guidance, Navigation and Control Conference*, 2011.
[45] F. Curti, M. Romano, and R. Bevilacqua, “Lyapunov-Based Thrusters' Selection for Spacecraft Control: Analysis and Experimentation,” *Journal of Guidance,*

Control, and Dynamics, vol. 33, no. 4, pp. 1143–1160, 2010.

[46] D. Pérez and R. Bevilacqua, “Lyapunov-Based Adaptive Feedback for Spacecraft Planar Relative Maneuvering via Differential Drag,” *Journal of Guidance, Control, and Dynamics*, vol. 37, no. 5, pp. 1678–1684, 2014.

[47] C. Lambert, B. S. Kumar, J.-F. Hamel, and A. Ng, “Implementation and performance of formation flying using differential drag,” *Acta Astronautica*, vol. 71, pp. 68–82, 2012.

[48] L. Dell'Elce and G. Kerschen, “Propellantless rendez-vous of QB-50 nanosatellites,” *63rd International Astronautical Congress*, 2012.

[49] L. Dell'Elce and G. Kerschen, “Orbital rendez-vous using differential drag in the QB50 constellation,” in *AIAA/AAS Astrodynamics Specialist Conference*, 2012.

[50] R. Twiggs, B. Malphrus, and J. Muylaert, “The QB50 Program, the first CubeSat Constellation doing Science,” in *24th Annual AIAA/USU Conference on Small Satellites*, Logan, Utah, 2010.

[51] L. Dell'Elce, V. Martinusi, and G. Kerschen, “Robust optimal rendezvous using differential drag,” in *AIAA/AAS Astrodynamics Specialist Conference*, 2014.

[52] L. Dell'Elce and G. Kerschen, “Validation of differential drag propellantless maneuvers using 6DOF Simulations and Stochastic Dynamics,” in *9th International ESA Conference on Guidance, Navigation & Control*, Oporto, Portugal, 2014.

[53] L. Dell'Elce and G. Kerschen, “Optimal propellantless rendez-vous using differential drag,” *Acta Astronautica*, vol. 109, pp. 112–123, 2015.

[54] D. Spiller and F. Curti, “Inverse Dynamics Particle Swarm Optimization For Nanosatellites Rendezvous via Differential Drag,” in *3rd IAA Conference on University Satellite Missions and CubeSat Workshop & International Workshop on Lean Satellite Standardization*, Rome, 2015.

[55] D. Spiller, F. Curti, and L. Ansalone, “Inverse Dynamics Particle Swarm Optimization for Spacecraft Minimum-Time Maneuvers with Constraints,” in *23rd Conference of the Italian Association of Aeronautics and Astronautics AIAA*, Torino, Italy, 2015.

[56] D. Spiller, L. Ansalone, and F. Curti, “Particle Swarm Optimization for Time-Optimal Spacecraft Reorientation with Keep-Out Cones,” *Journal of Guidance, Control, and Dynamics*, vol. 39, no. 2, pp. 312–325, 2015.

[57] L. Mazal, D. Pérez, R. Bevilacqua, and F. Curti, “Spacecraft Rendezvous by Differential Drag Under Uncertainties,” *Journal of Guidance, Control, and Dynamics*, vol. 39, no. 8, pp. 1721–1733, 2016.

[58] H. Cho, L. Dell’Elce, and G. Kerschen, “Chattering-free sliding mode control for propellantless rendez-vous using differential drag,” in *6th International Conference on Astrodynamics Tools and Techniques (ICATT)*, Darmstadt, Germany, 2016.

[59] D. Pérez and R. Bevilacqua, “Differential Drag-Based Reference Trajectories for Spacecraft Relative Maneuvering Using Density Forecast,” *Journal of Spacecraft and Rockets*, vol. 53, no. 1, pp. 234–239, 2016.

[60] D. Pérez, “Adaptive lyapunov control and artificial neural networks for spacecraft relative maneuvering using atmospheric differential drag,” PhD Thesis, Rensselaer Polytechnic Institute, Rensselaer Polytechnic Institute, 2013.

[61] D. Guglielmo, D. Pérez, R. Bevilacqua, and L. Mazal, “Spacecraft relative guidance via spatio-temporal resolution in atmospheric density forecasting,” *Acta Astronautica*, vol. 129, pp. 32–43, 2016.

[62] D. Spiller, “Optimal Control Problem Solved via Swarm Intelligence,” Ph.D. Thesis, Sapienza University of Rome, 2018.

[63] M. Mathews and S. J. Leszkiewicz, “Efficient Spacecraft Formationkeeping With Consideration of Ballistic Coefficient Control,” *26th Aerospace Sciences Meeting Reno, NV, U.S.A.*, 1988.

[64] D. C. Folta, L. K. Newman, and T. Gardner, “Foundations of formation flying for Mission to Planet Earth and New Millennium,” in *AIAA/AAS Astrodynamics Conference*, San Diego, 1996.

[65] J. Fourcade, “Mission Analysis and Control of Interferometric Wheel Formation Flying,” *Proceedings of the 18th International Symposium on Space Flight Dynamics (ESA SP-548)*, 2004.

[66] H. Jigang and Z. Yulin, “Application of Phase-plane Method in the Co-plane Formation Maintenance of Formation Flying Satellites,” in *2006 Chinese Control Conference*, Harbin, China, 2006, pp. 1900–1904.

[67] J. T. Wedekind, “Characterizing and controlling the effects of differential drag on satellite formations,” Master Thesis, Air Force Institute of Technology, 2006.

[68] B. S. Kumar, A. Ng, K. Yoshihara, and A. de Ruiter, “Differential Drag as a Means of Spacecraft Formation Control,” in *2007 IEEE Aerospace Conference*, Big Sky, MT, USA, 2007, pp. 1–9.

[69] F. Bellefeuille, “Satellite Formation Maintenance Using DIfferential Atmospheric Drag,” Master's Thesis, McGill University, Montreal, 2011.

[70] G. Zeng, M. Hu, and H. Yao, “Relative orbit estimation and formation keeping control of satellite formations in low Earth orbits,” *Acta Astronautica*, vol. 76, pp. 164–175, 2012.

[71] K. D. Kumar, A. K. Misra, S. Varma, T. Reid, and F. Bellefeuille, “Maintenance of satellite formations using environmental forces,” *Acta Astronautica*, vol. 102, pp. 341–354, 2014.

[72] B. B. Hajovsky, “Satellite formation control using atmospheric drag,” Master Thesis, Air Force Institute of Technology, 2007.

[73] S. Varma, “Control of satellites using environmental forces : aerodynamic drag / solar radiation pressure,” Dissertation, Ryerson University, Toronto, Ontario, Canada, 2011.

[74] D. Pérez and R. Bevilacqua, “Spacecraft Maneuvering via Atmospheric Differential Drag using an Adaptive Lyapunov Controler,” in *Advances in the Astronautical Sciences 148:3855-3874*, 2013.

[75] R. Bevilacqua and T. A. Lovell, “Analytical guidance for spacecraft relative motion under constant thrust using relative orbit elements,” *Acta Astronautica*, vol. 102, pp. 47–61, 2014.
[76] R. Bevilacqua, “Analytical Guidance Solutions for Spacecraft Planar Rephasing Via Input Shaping,” *Journal of Guidance, Control, and Dynamics*, 2013.
[77] M. Pastorelli, R. Bevilacqua, and S. Pastorelli, “Differential-drag-based roto-translational control for propellant-less spacecraft,” *Acta Astronautica*, vol. 114, pp. 6–21, 2015.
[78] D. Spiller, F. Curti, and C. Circi, “Minimum-Time Reconfiguration Maneuvers of Satellite Formations Using Perturbation Forces,” *Journal of Guidance, Control, and Dynamics*, vol. 40, no. 5, pp. 1130–1143, 2017.
[79] M. Horsley, S. Nikolaev, and A. Pertica, “Small Satellite Rendezvous Using Differential Lift and Drag,” *Journal of Guidance, Control, and Dynamics*, vol. 36, no. 2, pp. 445–453, 2013.
[80] X. Shao, M. Song, J. Wang, D. Zhang, and J. Chen, “Satellite formation keeping using differential lift and drag under J2 perturbation,” *Aircraft Eng & Aerospace Tech*, vol. 89, no. 1, pp. 11–19, 2017.
[81] R. Sun, J. Wang, D. Zhang, Q. Jia, and X. Shao, “Roto-Translational Spacecraft Formation Control Using Aerodynamic Forces,” *Journal of Guidance, Control, and Dynamics*, vol. 40, no. 10, pp. 2556–2568, 2017.
[82] R. Sun, J. Wang, D. Zhang, and X. Shao, “Neural network-based sliding mode control for atmospheric-actuated spacecraft formation using switching strategy,” *Advances in Space Research*, vol. 61, no. 3, pp. 914–926, 2017.
[83] R. Sun, J. Wang, D. Zhang, and X. Shao, “Neural-Network-Based Sliding-Mode Adaptive Control for Spacecraft Formation Using Aerodynamic Forces,” *Journal of Guidance, Control, and Dynamics*, vol. 41, no. 3, pp. 757–763, 2017.
[84] D. Ivanov, M. Kushniruk, and M. Ovchinnikov, “Study of satellite formation flying control using differential lift and drag,” *Acta Astronautica*, 2018.
[85] P. C.E. Roberts *et al.,* “DISCOVERER - Radical Redesign of Earth Observation Satellites for Suistained Operation at Significantly Lower Altitudes,” *68th International Astronautical Congress (IAC)*, 2017.
[86] J. Virgili-Llop, P.C.E. Roberts, Z. Hao, L. Ramio, and V. Beauplet, “Very Low Earth Orbit mission concepts for Earth Observation. Benefits and challenges,” in *Reinventing Space Conference*, London, UK, 2014.
[87] F. Romano *et al.,* “System analysis and test-bed for an atmosphere-breathing electric propulsion system using an inductive plasma thruster,” *Acta Astronautica*, vol. 147, pp. 114–126, 2018.
[88] K. Moe and M. M. Moe, “Gas–surface interactions and satellite drag coefficients,” *Planetary and Space Science*, vol. 53, no. 8, pp. 793–801, 2005.
[89] A. Macario-Rojas, K. L. Smith, N. H. Crisp, and P.C.E. Roberts, “Atmospheric interaction with nanosatellites from observed orbital decay,” *Advances in Space Research*, vol. 61, no. 12, pp. 2972–2982, 2018.
[90] S. A. Schaaf and P. L. Chambre, “Flow of Rarefied Gases,” in *Flow of Rarefied Gases*, Princeton University Press, Ed., 1958.
[91] K. Moe and M. M. Moe, “Gas-Surface Interactions in Low-Earth Orbit,” *27th International Symposium on Rarefied Gas Dynamics*, 05/2011, pp. 1313–1318, 2011.
[92] M. D. Pilinski, B. M. Argrow, and S. E. Palo, “Semiempirical Model for Satellite Energy-Accommodation Coefficients,” *Journal of Spacecraft and Rockets*, vol. 47, no. 6, pp. 951–956, 2010.
[93] L. H. Sentman, “Free molecule flow theory and its application to the determination of aerodynamic forces,” *Technical Report, Lockheed Aircraft Corporation*, 1961.
[94] G. A. Bird, *Molecular gas dynamics and the direct simulation of gas flows*. Oxford: Clarendon Press, 2003.
[95] J. Virgili-Llop, P. C. E. Roberts, K. Palmer, S. Hobbs, and J. Kingston, “Descending Sun-Synchronous Orbits with Aerodynamic Inclination Correction,” *Journal of Guidance, Control, and Dynamics*, vol. 38, no. 5, pp. 831–842, 2015.
[96] L. Dell'Elce and G. Kerschen, “Comparison between analytical and optimal control techniques in the differential drag based rendezvous,” in *5th International Symposium On Formation Flying Missions and Technologies*, Munich, 2013.
[97] L. Dell'Elce and G. Kerschen, “Robust rendez-vous planning using the scenario approach and differential flateness,” in *2nd IAA Conference on Dynamics and Control of Space Systems*, Roma, Italy, 2014.
[98] D. Pérez, B. Wohlberg, T. A. Lovell, M. Shoemaker, and R. Bevilacqua, “Orbit-centered atmospheric density prediction using artificial neural networks,” *Acta Astronautica*, vol. 98, pp. 9–23, 2014.
[99] D. Pérez and R. Bevilacqua, “Neural Network based calibration of atmospheric density models,” *Acta Astronautica*, vol. 110, pp. 58–76, 2015.
[100] N. B. Stastny, F. R. Chavez, Lin, and Chin, *Localized density drag prediction for improved onboard orbit propagation.* [Online] Available: http://www.dtic.mil/dtic/tr/fulltext/u2/a531881.pdf.
[101] D. Guglielmo, “Spatio-Temporal Atmospheric Density Forecasting For Drag-Based Propellant-Less Spacecraft Maneuvering: Theory and Mission Design,” Dissertation, University of Florida, Florida, 2015.