Annex D : Càlcul de conductors

Constants utilitzades **:** resistència lineal del coure : (**1/56**) ohm·mm2 / m densitat del coure : **8,96** g/cm3

Fòrmules utilitzades **:** $Va-Vb = 2 \cdot L \cdot I / (56 \cdot S)$ $R = 2 \cdot L / (S \cdot 56)$ n $m = n \cdot 2 \cdot L \cdot S \cdot d$ $Pcalor = n \cdot R \cdot I \cdot I$

(no superar el 1,5%)

connexió	Imax [A]	Vmax [V]	longitud [m]	secció [mm2]	resistència [ohm]	caiguda tensió	nº connexions	pes Cu [g]	pèrdues màximes [W]
mòduls - reguladors	3,44	19,5	0,7	1,5	0,0573	1,011%	24	451,58	16,283
reguladors - bateries	4,34	309	6	1,5	0,6200	0,871%	1	161,28	11,680
reguladors - bateries	0,18	309	3	1	0,0193	0,001%	24	1290,24	0,015
bateries - driver	10,00	309	2	2,5	0,2857	0,925%	1	89,60	28,571
driver - motor	10	377	2	3	0,2381	0,632%	1,5	161,28	35,714
							totals :	2153,98	92,264

Annex E : WildFire User Manual

2. WildFire Modules

The WildFire is made up of modules. Many of these modules correspond to on-chip ColdFire peripherals. Intec has added other modules for additional features. An attempt has been made to keep this module view consistent with the MPU peripherals, the schematics, headers, run-time library and demo programs. These modules are:

- Power System – 5V0, 3V3, GND, Analog 5V0, Analog GND
- Resets – Power-On, Hardware, Software, Low Voltage, Watchdog Timer
- Serial module
- Background Debug Mode (BDM) port
- Memory – Internal SRAM, External SDRAM, Internal Flash
- Flash Storage – External Flash, SD Card
- Analog to Digital module (QADC)
- CPLD modules – GPI/O
- Interrupt Request Subsystem (IRQ)
- Timer modules (GPT, DMA)
- LCD / Keypad
- Real Time Clock – Hibernation and wakeup
- WatchDog Timer (WDT) module
- Ethernet module
- Controller Area Network (CAN) module

Most modules are associated with connectors. These are shown in Figure 2.

All this adds up to a rich assortment of features, as shown in Figure 3.

Figure 2: WildFire Connector Functions

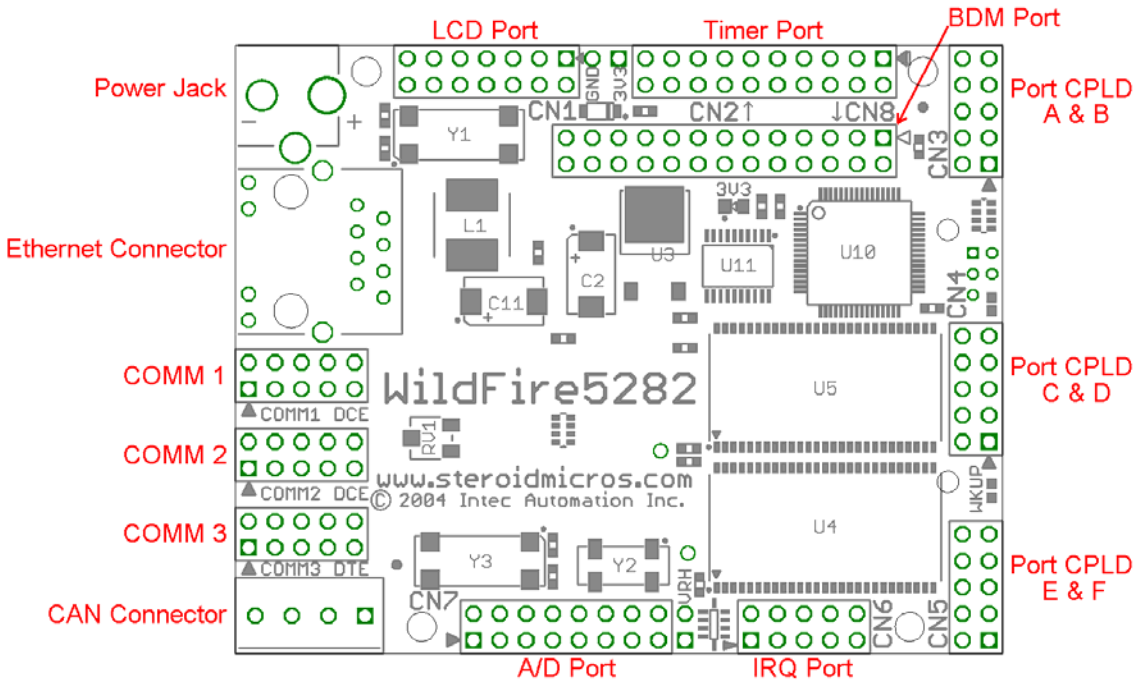

See Appendix A for header pins and functions available on these pins.

Power System

General Description

The center positive 5.3/2.1mm power jack for the WildFire accepts inputs ranging from 8V to 24V DC capable of at least 3 watts. A green LED between CN8 and U11 indicates power, as shown in Figure 4.

The WildFire generates 2 voltage levels on-board, 5.0V and 3.3V. The 5.0V is used as a reference voltage for the A/D converter, power for the CAN transceiver and power for an off-board LCD display. 3.3V is used everywhere else and is made available at pin 1 of headers CN2 through CN6. Each of these headers also has a ground connection available on pin 2.

Figure 4: WildFire Power

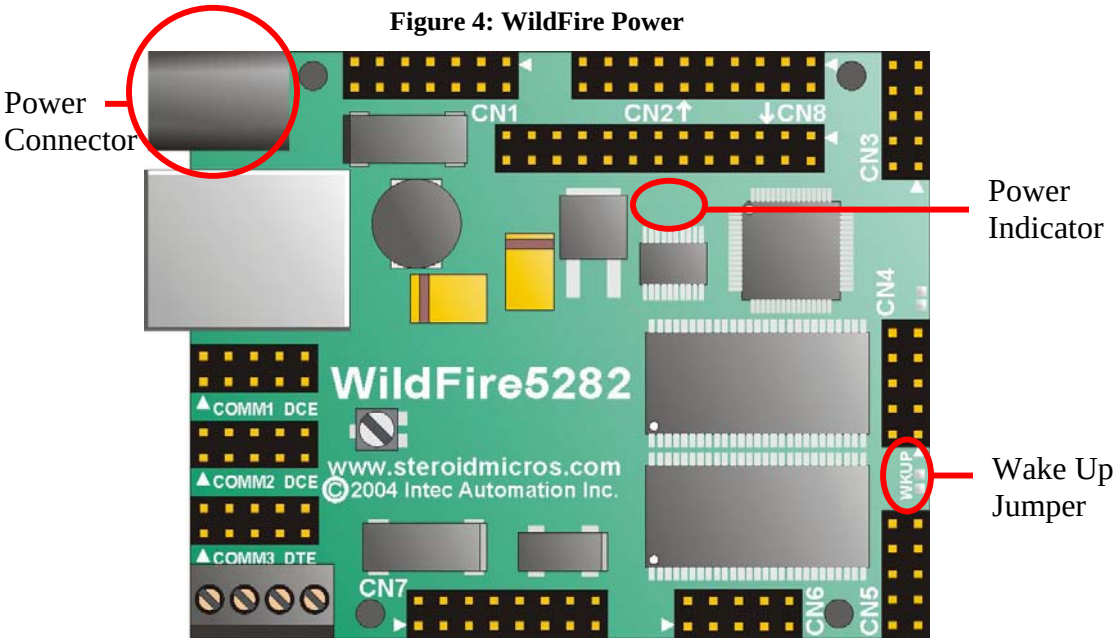

Board Hibernation

The WildFire5282 has an optional hibernation feature that allows the board to totally shut off its power supply for up to a month before automatically waking itself up. Presence of this feature is confirmed if the board has a battery holder and battery installed. The hibernation feature makes the WildFire a choice board for low-power data acquisition solutions. The board can be manually woken up from hibernation at any time by shorting the "WKUP" pads between CN4 and CN5.

Low Voltage Detection

The ColdFire5282 processor has low-voltage circuitry that detects when the power drops below 3.15V. The processor can be configured to either reset or interrupt on this condition. See the Freescale MCF5282 Reference Manual (Ch. 28) for more information.

Cautionary Notes

WARNING: To avoid damage to the WildFire, only attach a coaxial **center positive** (2.1 mm) plug.

Draw from any power pin on a header to an external circuit, in excess of 100ma, may damage the board.

Reset

General Description

There are 3 ways to reset the WildFire board, using the reset pads, the *RSTI signal or power cycling the board. The reset pads are located on the edge of the board between CN3 and CN4. Reset the board using the tip of a pen or another small metal object to short the two pads. The *RSTI signal comes out to the BDM header and generally is only used by the BDM pod. Resetting the board with the shorting pads or through the BDM will put all registers into their default state on the MCF5282 and the CPLD, but leave the contents of SDRAM, SRAM and the RTC intact. Alternatively, the board can be reset by power cycling it: remove and reconnect the power cable. This will reset all registers and destroy RAM contents.

Figure 5: Reset Signals

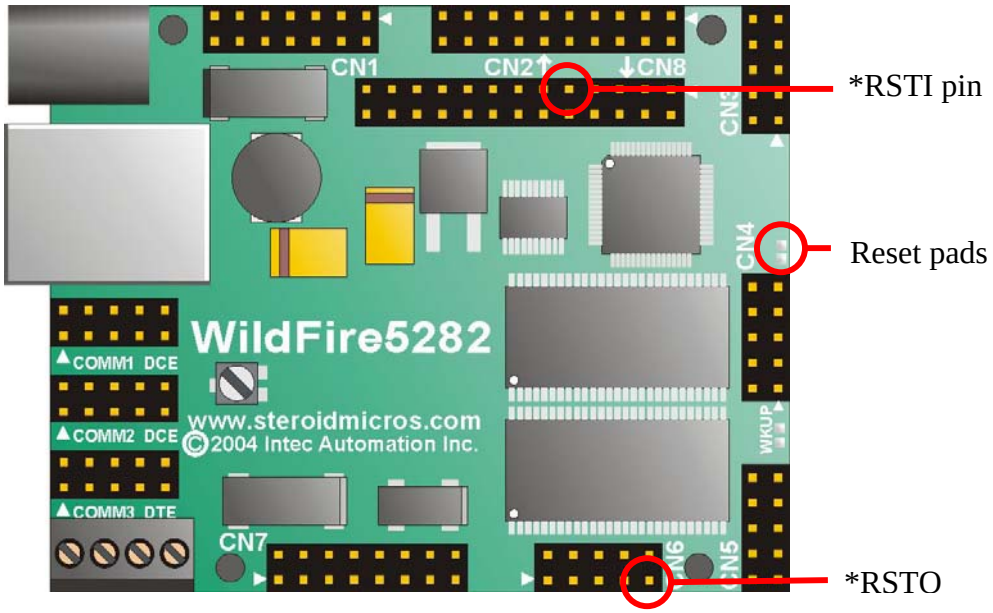

Startup Configuration

When the board comes out of reset, it reads its configuration options from the data bus. The states of these signals are used to determine the initial values in the Chip Configuration Register (CCR) and the Reset Configuration Register (RCON). RCON is a read-only register, but some fields in the CCR can be modified by user programs.

Caution! Loss of Functionality.

Setting the value of CCR[PSTEN] to 0 will disable background debugging.

Setting the value of CCR[SZEN] to 1 will override the functionality of pins 7 and 8 of the LCD-Keypad Port by configuring them for use on an external bus.

Refer to the Freescale MCF5282 Microcontroller Reference Manual – Ch.30: Chip Configuration Module for more details.

Serial Ports

General Description

There are three COM ports on the WildFire. COM1 and COM2 normally connect to a host PC, whereas COM3 normally connects to a serial device such as a modem, X-10 transceiver, etc.

COM1 is specifically used for serial debugging and console I/O. COM2 is used for console I/O. The 2x10 pin COM port headers require serial adapters to connect to the more standard DB9 serial connectors. These adapters are included with the WildFire5282-Dk. Schematics of these adaptors and the null-modem adaptor are included in Appendix B - Schematics.

Figure 6: WildFire Serial Ports

COM 1 & 2 – DCE

COM 1 and 2 are both configured with DCE pinouts when used with a simple DB9F to 10-pin serial adapter (Appendix B-11). That is, they connect directly to a DTE terminal such as a PC without the need of a null-modem. There are no hardware handshaking signals on COM1 and COM2.

COM 3 – DTE

COM3 is configured with DTE pinouts when used with a simple DB9F to 10-pin serial adapter (Appendix B-12). A DTE pinout corresponds to that of a PC. Like a PC connector, this port can connect directly to DCE devices such as a modem or a X10 transceiver without the need of a null-modem. This port provides 2 additional signals to interact with an external device: DTR and RTS. These signals provide partial hardware handshaking and also allow interfacing to the X10 Firecracker. Although these are RS322 level signals, they do not interface with the ColdFire's UART module, but are generated by the CPLD. They are asserted and negated by setting and clearing the corresponding bits in the COM3/Serial Flash register of the CPLD. See

CPLD Ports and Table 12 for more information on accessing these signals.

Table 2: Serial Ports and Available Signals

Port	Signal Name	Signal description	Direction	Pin
COM1	232_TX0	RS-232 level transmit signal	O	3
	232_RX0	RS-232 level receive signal	I	5
	UTXD0	CMOS level transmit signal	O	1
COM2	232_TX1	RS-232 level transmit signal	O	3
	232_RX1	RS-232 level receive signal	I	5
	UTXD1	CMOS level transmit signal	O	1
COM3	232_TX2	RS-232 level transmit signal	O	5
	232_RX2	RS-232 level receive signal	I	3
	232_DTR	RS-232 data terminal ready signal	O	7
	232_RTS	RS-232 ready to send signal	O	4
	UTXD2	CMOS level transmit signal	O	1

Using CMOS-Level Serial Signals

Some external devices may require CMOS-level instead of RS232-level signals. These can be brought out to the serial connectors. The CMOS transmit signals UTXD*n* can be connected to pin 1 of each serial header with a 0 ohm 0603 resistor shown in Figure 7. By default, the transmit signals are disconnected to prevent possible contention on pin 1 of the DB9.

Figure 7: UTXD*n* Jumper Pads Location (Bottom view)

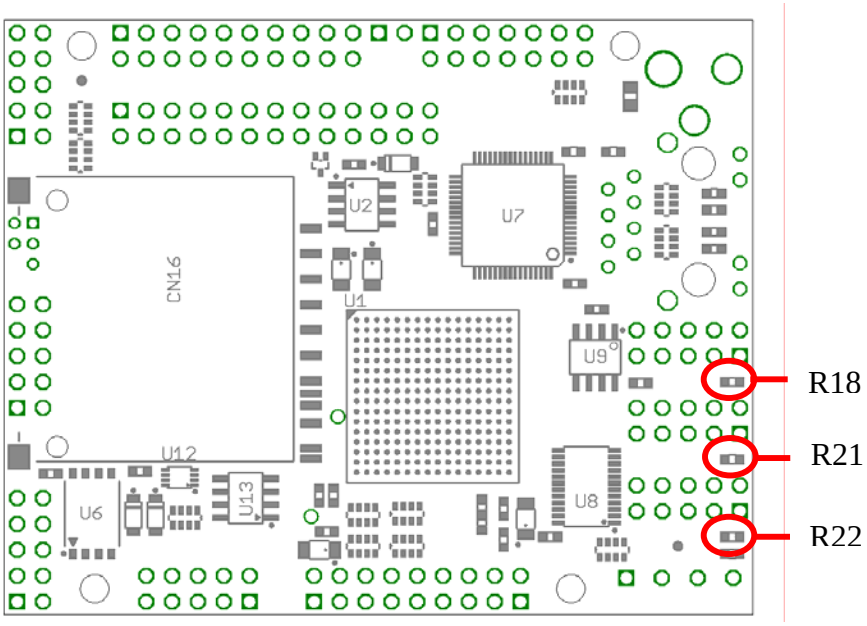

Software

dBUG

Use the Run Time Library functions **uart_xxx** to send and receive data. See **DemoUart** for example code.

uClinux

Serial ports are accessed through the device driver interface using devices **ttyS0, ttyS1, and ttyS2**. See **uDemoSerial** for example code.

BDM Port

General Description

While serial debugging using the on-board dBUG monitor is adequate for many applications, Background Debug Mode (BDM) debugging makes it possible for a BDM debugger to have total control of the processor, even after a program has crashed. BDM debugging is able to monitor the processor status at any time, without interfering with the processor itself.

Figure 8: CN8 – BDM Port

The BDM port has additional features:

Preventing Autorun

When the Autorun board property is set, the board will start executing a user program right after it powers up or comes out of reset. But, sometimes it is necessary to defeat Autorun in order to communicate with the dBug monitor to, for instance, change board properties or load another program. Autorun is defeated by coming out of reset with pins 1 and 3 shorted on the BDM connector, CN8.

BDM I/O

Several pins in the BDM port can be configured as I/O if the BDM is not being used. This is done by clearing CCR[PSTEN] to 0. This disables the BDM functionality of the PST*n* and DDATA*n* signals, configuring them as general purpose I/O. Then these pins are accessible using dio_init(..), dio_set(..) and dio_get(..) as described in the WildFire Programmers Reference.

Warning! Loss of Functionality.

Enabling the BDM Port for I/O disables the background debugging functionality of the BDM pod. Use other GPI/O before using the BDM I/O.

Out of reset the BDM pod still has full control of the processor.

Table 3 shows a description of all the pins on the BDM port.

Table 3: CN8 – BDM Port

Alt Func	Def Func	MCF Signal	RTL Port	RTL Pin		RTL Port	RTL Pin	MCF Signal	Def Func	Alt Func
-	-	-	*ATRN	-	1 2	-	-	*BKPT	BDM	-
-	GND	-	-	-	3 4	-	-	DSCLK	BDM	-
-	GND	-	-	-	5 6	-	-	TCLK	BDM	-
-	BDM	*RSTI	-	-	7 8	-	-	DSI	BDM	-
-	3V3	-	-	-	9 10	-	-	DSO	BDM	-
-	GND	-	-	-	11 12	-	-	PST3	BDM	I/O
I/O	BDM	PST2	-	-	13 14	-	-	PST1	BDM	I/O
I/O	BDM	PST0	-	-	15 16	-	-	DDATA3	BDM	I/O
I/O	BDM	DDATA2	-	-	17 18	-	-	DDATA1	BDM	I/O
I/O	BDM	DDATA0	-	-	19 20	-	-	-	GND	-
-	-	-	-	-	21 22	-	-	-	-	-
-	GND	-	-	-	23 24	-	-	CLKOUT	BDM	-
-	3V3	-	-	-	25 26	-	-	*TA	BDM	-

Memory and Storage

The WildFire has various types of memory available to the user:

- 512KB Internal Flash
- 64KB Internal SRAM
- 16MB External SDRAM

Refer to Figure 9 for the memory mapping of these memory blocks.

The WildFire also has 1MB of external flash and it can access up to 1GB of non-volatile memory in the form of an SD card. This is covered further in the next section because neither the external flash nor an SD card is memory mapped.

Internal Flash

Internal flash is located on the MCF5282 chip. The internal flash separated into two 256KB blocks. The bottom 256KB block is reserved for the dBUG monitor code and should not be modified. The top 256KB block may be used for user applications. Code executed from this flash memory is faster than code executed from SDRAM. Single reads from the internal flash require 2 cycles. The internal flash can be programmed with CFFlasher, using a BDM debug pod. Refer to Freescale MCF5282 Reference Manual, Chapter 6 for more information on programming and protecting internal flash.

Internal SRAM

The 64KB SRAM is also located on the MCF5282 chip. This is fast single-cycle memory making it ideal for the user program stack.

External SDRAM

16MB of SDRAM are accessible on the WildFire board. While the SDRAM is not particularly fast, requiring 5 cycles for a single memory access and 5-1-1-1 cycles for burst accesses, it is very large and able to accommodate very large user programs. Typically the user program is loaded and run from SDRAM. At the same time there is ample room for storage of data, variables and program heap.

Memory Mapping

The WildFire memory mapping is shown below in Figure 9. Any memory access to a location not specified in Figure 9 is an undefined operation and will result in a bus access error. This memory mapping is dependent on a user program being linked with the Intec memory mapping and using the dBUG monitor.

Figure 9: WildFire Memory Map

Internal Flash (512K)	Vector Table	**0x00000000 : 0x00003FFF**
	Parameters	**0x00004000 0x00007FFF**
	dBUG Code + Data	**0x00008000 : 0x0003FFFF**
	Available to programmer	**0x00040000 : 0x0007FFFF**
	Unimplemented Memory	**0x00080000 : 0x0FFFFFFF**
SDRAM (16MB)	dBUG reserved space (Vector Table, Data Heap, Stack)	**0x10000000 : 0x1001FFFF**
	User Code User Data	**0x10020000 : : 0x10FFFFFF**
	Unimplemented Memory	**0x11000000 : 0x1FFFFFFF**
Internal SRAM (64K)	User Stack	**0x20000000 : 0x2000FFFF**
	Unimplemented Memory	**0x20010000 0x2FFFFFFF**
CPLD (64K)	CPLD Registers	**0x30000000 : 0x3000000F**
	Not Used[1]	**0x30000010 : 0x3000FFFF**
	Unimplemented Memory	**0x30010000 0x3FFFFFFF**
IPSBAR (1G)	ColdFire Internal Peripheral System Registers See Freescale MCF5282 Reference Manual for more information.	**0x40000000 : : 0x4FFFFFFF**
	Unimplemented Memory	**0x50000000 : 0xFFFFFFFF**

NOTE:

1) The CPLD memory space is much larger than the size of the CPLD memory. There are only 16 CPLD registers but the smallest portion of memory that can be mapped to a chip select is 64KB. As a consequence, this bank of 16 registers is mapped to multiple locations within the 64KB range.

Flash Storage

General Description

There are two types of flash storage on the WildFire: external flash and removable flash. The external flash is a small, 1-4MB serial access device that comes installed on the board. The removable flash is an SD card that must be purchased separately. Both can be used to store data as well a program. If a program is present, the WildFire can be configured to automatically run this program. Both are accessed using the Queued Serial Peripheral Interface (QSPI) on the MCF5282. The serial flash is mapped to QSPI_CS0 and the SD card is mapped to QSPI_CS1. The RTL provides higher-level access functions for reading and writing data and erasing the flash in xflash.h and sd.h.

External Flash

The external flash used on the WildFire is an ST M25Pxx, where xx is 80 for a 1MB chip, 16 for a 2MB chip and 32 for a 4MB chip. From the perspective of the RTL, the serial flash is organized into bytes and sectors. Any number of bytes can be read, and any number of bytes can be written once. Before writing the flash a second time, the sector being written must be erased. When erasing the flash only sectors can be accessed. The sector size is 64KB. Each sector is aligned to a 64KB boundary. Bits are erased to 1's. For details of the external flash operation see the ST M25Pxx user manual.

SD Card

The SD Card can be from any vendor of this technology, but using SanDisk products are recommend, as the WildFire has been verified to work with these cards. The SD card comes in many available sizes up to 1GB, providing many storage options. Internally, the SD card is organized into blocks and sectors, however using the RTL; the developer may access individual bytes for both read and write accesses. Additionally, the developer need not erase the SD card before writing to a location more than once. The SD card erases automatically before writing and the RTL ensures that any unwritten data is preserved. Erasing blocks, which are 512 bytes long, can be done to speed up subsequent write operations. For details of the SD card see the San Disk SD Card Manual.

Software

Booting a Program From Flash

dBUG monitor provides commands for running a program from either external flash or the SD Card. See the SBCTools User Manual for more details of the dBUG commands.

A program contained in external storage can be run automatically when the board resets through a setting in dBUG. If **Autorun** is set, dBUG monitor will attempt to run a program first from the SD Card then from the external flash.

If **Autorun** is set and the user wishes not to have the program run automatically, short pins 1 and 3 on the BDM header (CN8) to assert the *ATRN signal. When *ATRN is asserted, dBUG will always boot to the dBUG prompt. Figure 10 shows the flow diagram upon reset of the microcontroller.

Figure 10: Reset Flow Diagram

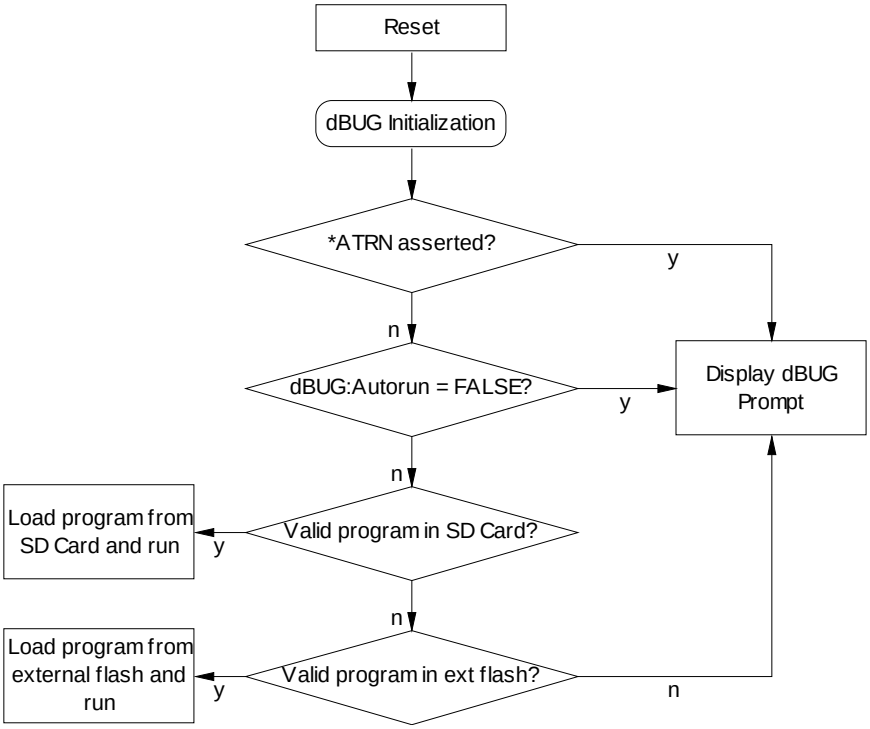

dBUG

A user program can be loaded into the external flash and the SD card. dBUG monitor provides several commands for programming (loading) and erasing a program from flash. See ProgrammerReference - Appendix B for a description of some of the dBUG commands.

A program is stored at the top of the storage device's space along with the program information to enable dBUG monitor to correctly read and verify the program. The mapping of program into storage is shown in Figure 11 and

Figure 12. A user must be sure not to write or erase any bytes above the sector boundary that is below the start of the user program.

The total space consumed by any program is the size of the program + 32 bytes rounded-up to the nearest sector boundary. The highest byte that a user program should then access is one byte below this address.

To configure and access the external flash and SD card, use the RTL functions. Refer to the WildFire Programmer Reference Manual for documentation on using the RTL.

Figure 11: External Flash Storage Space (1-4MB)

Data Storage	0x00000000 : Returned by xf_get_highest_data_byte()
User Program	Application for autorun (variable size) : 0x000FFFFF (1MB) ← top of flash

Figure 12: SD Card Storage Space (8MB-2GB)

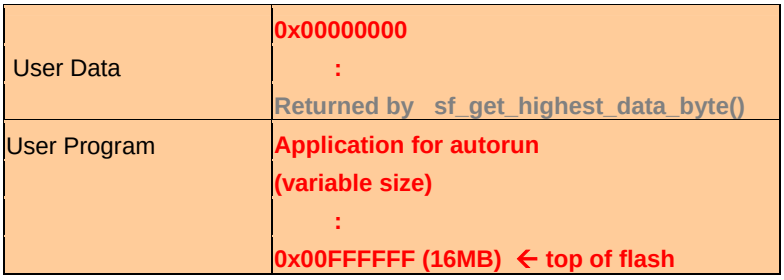

uClinux

External flash and SD card are accessed though a file system under uClinux. The SD card contains a Linux ext2 file system while the external flash uses a Journaling Flash File System (JFFS2). Files and directories can be created on these devices using standard C library system calls (like fopen, fclose) from within a user application or from the shell prompt with commands like (mkdir, rm, etc..). See the Programmer Reference and SBCTools User Manual for more information.

Analog to Digital Port

General Description

The Analog to Digital Port (AtoD) is treated as a single 8-channel port by the RTL. Each channel has 10 bits of resolution. The channels are assigned as shown in

Table 4. Each pin is accessed through CN7 as shown in Figure 13.

Figure 13: CN7 – AtoD Port

Table 4: AtoD Port Pin Assignments

Alt Func	Def Func	MCF Signal	RTL Port	RTL Pin			RTL Port	RTL Pin	MCF Signal	Def Func	Alt Func
-	AD	AN0	Analog	PIN0	1	2	-	-	-	AGND	-
-	AD	AN1	Analog	PIN1	3	4	-	-	-	AGND	-
-	AD	AN2	Analog	PIN2	5	6	-	-	-	AGND	-
-	AD	AN3	Analog	PIN3	7	8	-	-	-	AGND	-
-	AD	AN52	Analog	PIN4	9	10	-	-	-	AGND	-
-	AD	AN53	Analog	PIN5	11	12	-	-	-	AGND	-
-	AD	AN55	Analog	PIN6	13	14	-	-	-	AGND	-
-	AD	AN56	Analog	PIN7	15	16	-	-	-	AGND	-

The QADC may be configured to return the average value or last sampled value by setting the mode. Once the mode has been set, ad_get(..) will return the value associated with the channel passed in. For more information about the AtoD System refer to the Freescale MCF5282 Reference Manual, Ch. 28 – Queued Analog-to-Digital Converter.

Adjacent to CN7 are two test points for VRH and AGND. VRH is a 5V0 high reference signal and AGND is a 0V low reference signal. Both these signals have been filtered to ensure steady values when measuring delicate analog signals.

AtoD Filtration

The analog inputs are filtered with a low-pass, RC filter to reduce high-frequency noise on the pins. The R and C used in this filter are 4.7K and 0.01uF respectively. This gives rise to a filter with a time constant of 47uS and a cutoff frequency of 3.4KHz. Custom values for these passive filter components can be requested through a special order.

Figure 14: Schematic of the Analog Input Filter

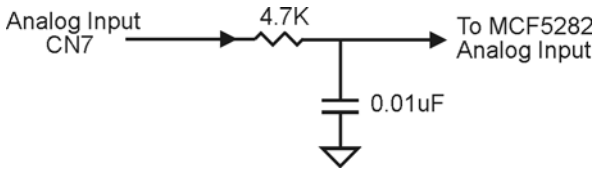

Software

dBUG

Use the Run Time Library functions **ad_xxx** to initialize and query the analog converter. See **DemoAD** for example code.

uClinux

Use the Run Time Library functions **ad_xxx** to initialize and query the analog converter. See **uDemoAD** for example code.

CPLD Ports

General Description

The CPLD provides extra signals for several functions of the WildFire board. It provides extended digital I/O signals and extra signals for the COM3, external flash, the RTC, LCD and SD Card.

Digital I/O

There are 3 headers on the WildFire that provide 24 extra dedicated general purpose I/O for developer use. Any of these pins can be configured as input or output independently. After a reset, all these signals are configured as digital inputs. These headers are CN3, CN4 and CN5, circled in Figure 15. Use the RTL functions located in dio.h to access all the digital I/O signals that the CPLD offers.

Figure 15: CPLD Ports

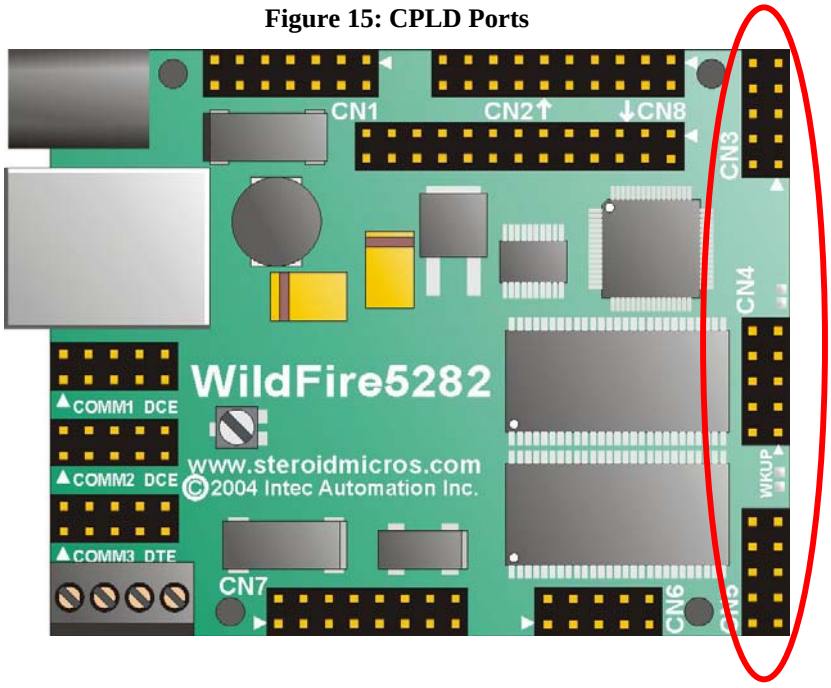

Table 5: CN3 – CPLD Port E and F

Alt Func	Def Func	MCF Signal	RTL Port	RTL Pin			RTL Port	RTL Pin	MCF Signal	Def Func	Alt Func
-	3V3	-	-	-	1	2	-	-	-	GND	-
-	I/O	-	WF_DIO_PORT_CE	PIN0	3	4	WF_DIO_PORT_CE	PIN1	-	I/O	-
-	I/O	-	WF_DIO_PORT_CE	PIN2	5	6	WF_DIO_PORT_CE	PIN3	-	I/O	-
-	I/O	-	WF_DIO_PORT_CF	PIN0	7	8	WF_DIO_PORT_CF	PIN1	-	I/O	-
-	I/O	-	WF_DIO_PORT_CF	PIN2	9	10	WF_DIO_PORT_CF	PIN3	-	I/O	-

Table 6: CN4 – CPLD Port C and D

Alt Func	Def Func	MCF Signal	RTL Port	RTL Pin			RTL Port	RTL Pin	MCF Signal	Def Func	Alt Func
-	3V3	-	-	-	1	2	-	-	-	GND	-
-	I/O	-	WF_DIO_PORT_CC	PIN0	3	4	WF_DIO_PORT_CC	PIN1	-	I/O	-
-	I/O	-	WF_DIO_PORT_CC	PIN2	5	6	WF_DIO_PORT_CC	PIN3	-	I/O	-
-	I/O	-	WF_DIO_PORT_CD	PIN0	7	8	WF_DIO_PORT_CD	PIN1	-	I/O	-
-	I/O	-	WF_DIO_PORT_CD	PIN2	9	10	WF_DIO_PORT_CD	PIN3	-	I/O	-

Table 7: CN5 – CPLD Port A and B

Alt Func	Def Func	MCF Signal	RTL Port	RTL Pin			RTL Port	RTL Pin	MCF Signal	Def Func	Alt Func
-	3V3	-	-	-	1	2	-	-	-	GND	-
-	I/O	-	WF_DIO_PORT_CA	PIN0	3	4	WF_DIO_PORT_CA	PIN1	-	I/O	-
-	I/O	-	WF_DIO_PORT_CA	PIN2	5	6	WF_DIO_PORT_CA	PIN3	-	I/O	-
-	I/O	-	WF_DIO_PORT_CB	PIN0	7	8	WF_DIO_PORT_CB	PIN1	-	I/O	-
-	I/O	-	WF_DIO_PORT_CB	PIN2	9	10	WF_DIO_PORT_CB	PIN3	-	I/O	-

Internal Organization

The CPLD is also responsible for other signals; care must be taken not to write to the wrong location in the CPLD's memory space. The CPLD does not need to be accessed directly; use the RTL whenever possible.

The CPLD provides these signals:

- 24 individually configurable digital I/O,
- DTR and RTS on COM3 (see Serial Ports),
- Write protect and hold signals for the external flash (see External Flash),
- PWRDWN for the RTC and hibernation mode (see Real Time Clock Module),
- The interrupt line for an SDIO card (see SD Card) and
- One additional line for the LCD-Keypad interface port (see LCD-Keypad Port).

The CPLD is composed of a set of registers that are mapped into the memory space of the MCF5282 on chip select channel 0 (*CS0). This set of registers is accessed through a 4-bit data bus (D[27:24]) and 4 address lines (A[3:0]). The CPLD is internally organized into 16 – 4 bit registers. 14 of these registers are used for digital I/O and the remaining 2 are used for extra on-board signals. Table 8 shows the internal memory map of the registers within the CPLD. With 4 address lines, 16 unique locations are addressable.

Table 8: CPLD Internal Memory Mapping

Address	Register	Name
CPLD_BASE + 0x0	DDRA	Port A Data Direction Register
CPLD_BASE + 0x1	DDRB	Port B Data Direction Register
CPLD_BASE + 0x2	DDRC	Port C Data Direction Register
CPLD_BASE + 0x3	DDRD	Port D Data Direction Register
CPLD_BASE + 0x4	DDRE	Port E Data Direction Register
CPLD_BASE + 0x5	DDRF	Port F Data Direction Register
CPLD_BASE + 0x6	DDRG	Port G Data Direction Register
CPLD_BASE + 0x7	PWRDWN	Power Down Register
CPLD_BASE + 0x8	DATA	Port A Data Register
CPLD_BASE + 0x9	DATB	Port B Data Register
CPLD_BASE + 0xA	DATC	Port C Data Register
CPLD_BASE + 0xB	DATD	Port D Data Register
CPLD_BASE + 0xC	DATE	Port E Data Register
CPLD_BASE + 0xD	DATF	Port F Data Register
CPLD_BASE + 0xE	DATG	Port G Data Register
CPLD_BASE + 0xF	COM3/SerFla	COM3 / Serial Flash Register

The DDR*n* registers are used to configure each pin as either input (0) or output (1). The DAT*n* registers are used to write and read values of the digital I/O pins. When the pin is configured as an input, the value read from DAT*n* is the value that is being driven externally on the pin. Writing DAT*n* with either 0 or 1 has no effect in this case. When the pin is configured as an output, the value read on DAT*n* is the value that the CPLD is driving on the pin. Writing DAT*n* causes the pin to be driven to the corresponding voltage level. Table 9 shows the Data Direction Register for each 4-bit port. Table 10 shows the Data Register for each 4-bit port.

Table 9: Port C*n* Data Direction Register Field Description

Bits	Name	Description	R/W
3	DDR*n*3	Determines the direction of the data at Port C*n* pin 3. Set to 0 to configure the pin as input, set to 1 to configure the pin as input.	R/W
2	DDR*n*2	Determines the direction of the data at Port C*n* pin 2. Set to 0 to configure the pin as input, set to 1 to configure the pin as input.	R/W
1	DDR*n*1	Determines the direction of the data at Port C*n* pin 1. Set to 0 to configure the pin as input, set to 1 to configure the pin as input.	R/W
0	DDR*n*0	Determines the direction of the data at Port C*n* pin 0. Set to 0 to configure the pin as input, set to 1 to configure the pin as input.	R/W

Table 10: Port C*n* Data Register Field Description

Bits	Name	Description	R/W
3	DAT*n*3	Read this bit to get the state of the associated signal. Write this bit to set the state of the signal when DDR*n*3 is set to 1.	R/W
2	DAT*n*2	Read this bit to get the state of the associated signal. Write this bit to set the state of the signal when DDR*n*2 is set to 1.	R/W
1	DAT*n*1	Read this bit to get the state of the associated signal. Write this bit to set the state of the signal when DDR*n*1 is set to 1.	R/W
0	DAT*n*0	Read this bit to get the state of the associated signal. Write this bit to set the state of the signal when DDR*n*0 is set to 1.	R/W

All 4-bit ports (CA, CB, CC, CD, CE, CF) are identical; the exception to the above model is Port CG, which has only a single I/O pin, pin 0. For this port, Bits 3-1 are ignored when written and will always return 0 when read. Bit 0 behaves identically as bit 0 on the other GPI/O ports.

Two additional registers exist in the CPLD. The PowerDown Register provides access to the PWRDWN signal, the SD_IRQ signal and the *ATRN signal. When PWRDWN is asserted it clears the battery-backed D-Flip Flop that shuts down the 5.0V voltage switcher. This will shut down the board until the *WAKE_UP signal is asserted by the RTC or manually on the WKUP shorting pads. PWRDWN is a write-only signal; reading is an undefined operation. The SD_IRQ signal is provided to support an SDIO card inserted in the SD connector. The *ATRN signal is used by dBUG monitor during startup. See Table 11 for a description of the PowerDown register.

Table 11: PowerDown Register Field Description

Bits	Name	Description	R/W
3	-	Reserved (always 0)	-
2	*ATRN	Autorun Disable signal. Asserted low when autorun is not desired.	R
1	PWRDWN	Power Down bit. Set to 1 to turn the power to the board off and enter hibernation mode. RTC wakeup should be set before setting this bit. This bit is 0 after reset.	R/W
0	SD_IRQ	SDIO interrupt request. Asserted when an SDIO card asserts an interrupt request. Must be polled, does not generate an interrupt.	R

The COM3 and Serial Flash Register control the extra signals that are used by the COM3 header and the serial flash chip. Table 12 shows the register that holds the serial and external flash signals.

Table 12: COM3 and Serial Flash Register Field Description

Bits	Name	Description	R/W
3	RTS	COM3 RTS signal. 0 after reset.	R/W
2	DTR	COM3 DTR signal. 0 after reset.	R/W
1	*SF_WP	Write protect signal for the serial flash. 0 after reset.	R/W
0	*SF_HOLD	Hold signal for the serial flash. 0 after reset.	R/W

Software

dBUG

Use the Run Time Library functions **dio_xxx** to initialize, set and query the state of the digital pins. See **DemoDIO** for example code.

uClinux

Use the Run Time Library functions **dio_xxx** to initialize, set and query the state of the digital pins. See **uDemoDIO** for example code.

IRQ Port

General Description

The MCF5282 EPORT module controls 7 pins on the IRQ port, CN6. These pins can be individually configured as digital input or output or they can be configured to be an edge or level sensitive interrupt pin. If the pin is configured for edge detection, it can detect on a rising edge, falling edge or both. All IRQ pins are configured as digital input out of reset. Configure IRQ pins and register interrupt handlers using the irq_init(..) function in irq.h. Configure IRQ pins as digital I/O using dio_init(..), dio_set(..) and dio_get(..) in dio.h.

The *RSTO signal also appears on CN6. This signal is otherwise unrelated to the IRQ pins. *RSTO is asserted when the board resets for any reason. This signal can be used to synchronize off-board systems with the MCF5282 reset. All the pins are located on CN6 as shown in Figure 16.

Figure 16: CN6 – IRQ Port

Table 13: IRQ Port Pin Assignment

Alt Func	Def Func	MCF Signal	RTL Port	RTL Pin			RTL Port	RTL Pin	MCF Signal	Def Func	Alt Func
-	3V3	-	-	-	1	2	-	-	-	GND	-
IRQ (PIN2)	I/O	IRQ2	WF_DIO_PORT_NQ	PIN2	3	4	WF_DIO_PORT_NQ	PIN1	IRQ1	I/O	IRQ (PIN1)
IRQ (PIN1)	I/O	IRQ4	WF_DIO_PORT_NQ	PIN4	5	6	WF_DIO_PORT_NQ	PIN3	IRQ3	I/O	IRQ (PIN1)
IRQ (PIN1)	I/O	IRQ6	WF_DIO_PORT_NQ	PIN6	7	8	WF_DIO_PORT_NQ	PIN5	IRQ5	I/O	IRQ (PIN1)
-	I	*RSTO	-	-	9	10	WF_DIO_PORT_NQ	PIN7	IRQ7	I/O	IRQ (PIN1)

.

Interrupt Level and Priority

Before configuring interrupts on the WildFire, an understanding of the interrupt level and priority scheme is required. Each interrupt vector is assigned a level and a priority. There are 7 interrupt levels. 1 is the lowest level, 7, which is non-maskable, is the highest. At each level there are up to 9 possible priorities. 0 is the lowest priority, 7 is the highest. There is a midpoint priority reserved for the IRQ pins, defined as higher priority than 3 and lower priority than 4. No two interrupt vectors can have the same level and priority.

The IRQ pins have hardcoded level and priority in the interrupt scheme. These are shown below in Table 14. For more information regarding the ColdFire's interrupts, see the Freescale MCF5282 Reference Manual Ch. 10 – Interrupt Controller Module and Ch. 11 – Edge Port Module.

Table 14: IRQ Pin Level and Priority

Signal	Level	Priority
IRQ1	1	Midpoint*
IRQ2	2	Midpoint*
IRQ3	3	Midpoint*
IRQ4	4	Midpoint*
IRQ5	5	Midpoint*
IRQ6	6	Midpoint*
IRQ7	7	Midpoint*

*Midpoint priority is defined as greater than 3 and less than 4.

Software

dBUG

Use the Run Time Library functions **irq_xxx** to initialize and handle interrupt requests. See **DemoIRQ** for example code.

uClinux

These pins are not directly supported by the uClinux BSP provided by Intec. Interrupts in uClinux cannot be handled by user applications. A specialized device driver will be required to implement these signals under uClinux.

GPT Port

There are 2 16-bit General Purpose Timer modules on the WildFire that each consists of 4 pins. Each timer is initialized with a value and then counts down at a rate determined by the prescaler divider and the system clock speed. The timer can be configured to automatically wrap, reset or stop once it reaches zero. Each pin on the timer can be individually configured as an input capture (IC), output compare (OC) or digital input or output.

The GPT port is part of CN2 and occupies the lower half of the pins as shown in Table 15.

Figure 17: GPT Timers

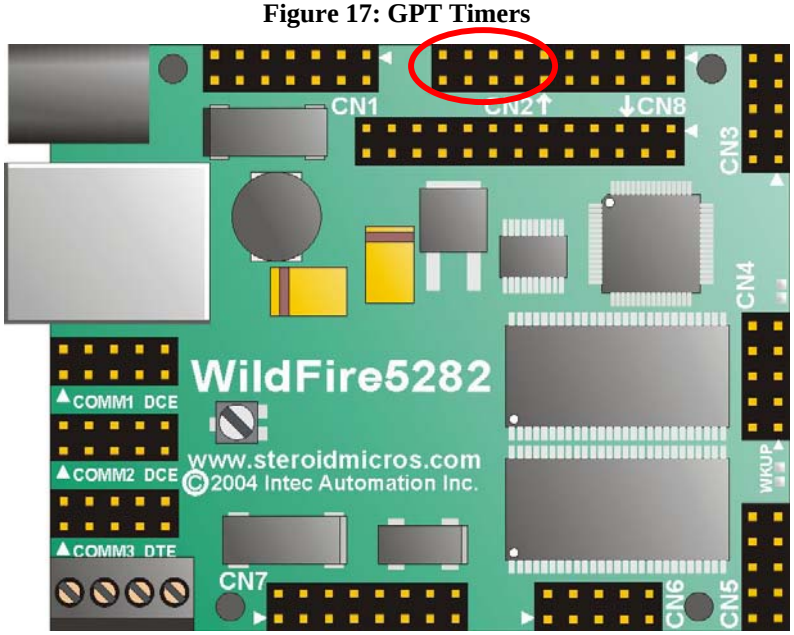

Caution! Loss of Functionality. Configuring a pin as digital I/O, overrides any previous configuration the pin had as a timer and vice versa. Therefore particular attention must be paid to be sure that the pin is only configured as one or the other.

Table 15: CN2 – GPT Timers

Alt Func	Def Func	MCF Signal	RTL Port	RTL Pin			RTL Port	RTL Pin	MCF Signal	Def Func	Alt Func
			DMA Timers				DMA Timers				
Timer GPT_PORT_TA PIN0	I/O	PTA0	WF_DIO_PORT_TA	PIN0	11	12	WF_DIO_PORT_TB	PIN0	PTB0	I/O	Timer GPT_PORT_TB PIN0
Timer GPT_PORT_TA PIN1	I/O	PTA1	WF_DIO_PORT_TA	PIN1	13	14	WF_DIO_PORT_TB	PIN1	PTB1	I/O	Timer GPT_PORT_TB PIN1
Timer GPT_PORT_TA PIN2	I/O	PTA2	WF_DIO_PORT_TA	PIN2	15	16	WF_DIO_PORT_TB	PIN2	PTB2	I/O	Timer GPT_PORT_TB PIN2
Timer GPT_PORT_TA PIN3	I/O	PTA3	WF_DIO_PORT_TA	PIN3	17	18	WF_DIO_PORT_TB	PIN3	PTB3	I/O	Timer GPT_PORT_TB PIN3
-	3V3	-	-	-	19	20	-	-	-	GND	-

Software

The GPT module on the MCF5282 can be configured to run entirely in hardware or with interrupts. When configured without interrupts the fastest cycle (falling edge to falling edge or rising edge to rising edge) is 2 milliseconds based on the system clock of 64MHz. When running with interrupts the cycle can be much faster depending on the interrupt handler execution speed.

dBUG

Use the Run Time Library functions **gpt_xxx** to initialize, set and query the state of the GPT timers. See **DemoGPT** for example code.

uClinux

Use the Run Time Library functions **gpt_xxx** to initialize, set and query the state of the GPT timers. See **uDemoGPT** for example code. The isr cannot be used from uClinux applications and will be ignored. Under uClinux the gpt timers must run in hardware only mode which limits the minimum cycle to ~2 milliseconds.

DMA Timer Port

General Information

Although the DMA timers and GPTs share a single port, their operation differs significantly. There are 4 32-bit DMA Timers on the MCF5282 that each has a single input capture (IC) pin and a single output compare (OC) pin associated with it. Each timer has two pins associated with it and a prescaler value that enables the clock resolution to vary from 15ns to 64ms. The timers can operate in a free-run mode where the timer counts up to 0xFF FF FF FF then wraps to 0, or restart mode where the timer will reset to 0 once the reference compare value is reached.

Each DMA Timer module can be configured to fire an interrupt when an input is captured or a reference compare match is detected.

The DMA Timer pins can be independently configured as GPI/O. Configuring a pin as I/O will disable any timer functionality associated with the pin, but will not affect the timer itself. Configuring an IC or OC pin for its timer function will disable its GPI/O function.

The DMA timers' pins come out to CN2 and occupy the upper half of the port as shown in Figure 18 and Table 16.

Figure 18: DMA Timers

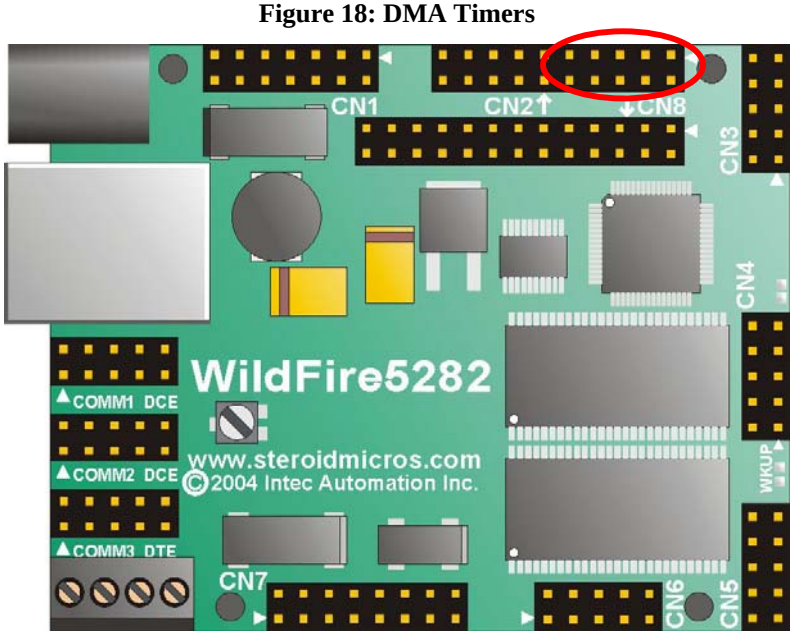

Caution! Loss of Functionality. Configuring a pin as digital I/O, overrides any previous configuration the pin had as a timer and vice versa. Therefore particular attention must be paid to be sure that the pin is only configured as one or the other.

Table 16: CN2 – DMA Timers

Alt Func	Def Func	MCF Signal	RTL Port	RTL Pin			RTL Port	RTL Pin	MCF Signal	Def Func	Alt Func
-	3V3	-	-	-	1	2	-	-	-	GND	-
Timer DT_PORT_TDA	I/O	PTD0	WF_DIO_PORT_TD	PIN0	3	4	WF_DIO_PORT_TD	PIN1	PTD1	I/O	IC Timer DT_PORT_TDA
Timer DT_PORT_TDB	I/O	PTD2	WF_DIO_PORT_TD	PIN2	5	6	WF_DIO_PORT_TD	PIN3	PTD3	I/O	IC Timer DT_PORT_TDB
Timer DT_PORT_TCA	I/O	PTC0	WF_DIO_PORT_TC	PIN0	7	8	WF_DIO_PORT_TC	PIN1	PTC1	I/O	IC Timer DT_PORT_TCA
Timer DT_PORT_TCB	I/O	PTC2	WF_DIO_PORT_TC	PIN2	9	10	WF_DIO_PORT_TC	PIN3	PTC3	I/O	IC Timer DT_PORT_TCB
			GPT Timers				GPT Timers				

Software

The DMA Timer module on the MCF5282 can be configured to run entirely in hardware or with interrupts. When configured without interrupts the DMA timer functionality is rather limited and most likely not very useful. In hardware, the DMA timer can generate a square wave only. This is due to the fact that unlike the GPT timers there is no way to modify the pin state on overflow, only on a successful compare.

Although the DMA Timers lack the hardware functionality of the GPT timers they can be set to run at a maximum speed of 64MHz (System clock) which gives them double the resolution of the GPT timers.

dBUG

Use the Run Time Library functions **dt_xxx** to initialize and manipulate the DMA Timer pins. See **DemoDT** for example code.

uClinux

Use the Run Time Library functions **dt_xxx** to initialize and manipulate the DMA Timer pins. The isr cannot be used from uClinux applications and will be ignored. Under uClinux the DMA timers must run in hardware only mode which limits the cycle to a square wave only

LCD – Keypad Port

A character based LCD and a 4 x 4 (or smaller matrix) keypad can be attached directly to CN1 on the WildFire, shown in Figure 19. The interface to an LCD/Kpd is made with a simple ribbon cable harness described in Appendix B, using functions contained in LCD.h. The pin mapping is shown in Table 17.

When not used as an LCD/Kpd port, many of the CN1 signals can be configured as GPIO using routines in dio.h in the RTL. Out of reset, the CN1 signals are configured as GPIO.

Figure 19: WildFire LCD Port

Table 17: CN1 – LCD Port

Alt Func	Def Func	MCF Signal	RTL Port	RTL Pin			RTL Port	RTL Pin	MCF Signal	Def Func	Alt Func
-	4V3	-	-	-	1	2	-	-	-	GND	-
LCD	I/O	PE7	WF_DIO_PORT_E	PIN7	3	4	-	-	-	CONT	
LCD	I/O	PE5	WF_DIO_PORT_E	PIN5	5	6	-	-	-	GND	-
LCD	I/O	PE3	WF_DIO_PORT_E	PIN3	7	8	WF_DIO_PORT_E	PIN2	PE2	I/O	LCD
LCD	I/O	PE1	WF_DIO_PORT_E	PIN1	9	10	WF_DIO_PORT_E	PIN0	PE0	I/O	LCD
LCD	I/O	PJ3	WF_DIO_PORT_J	PIN3	11	12	WF_DIO_PORT_J	PIN2	PJ2	I/O	LCD
LCD	I/O	PJ1	WF_DIO_PORT_J	PIN1	13	14	WF_DIO_PORT_CG	PIN0	-	I/O	LCD

Pins 1 through 10 are used to supply power and issue instructions to the LCD. Pins 7 through 14 are used to probe the keypad to detect when a button has been pressed. In other words, pins 7 through 10 are dual function: they provide the LCD data when the LCD is enabled and they also excite the keypad rows. The CONT signal is attached to the potentiometer RV1 on the WildFire board. Adjusting the potentiometer will adjust the contrast level of the LCD. The adjustment is very sensitive.

Software

dBUG

Use the Run Time Library functions **lcd_xxx and kpd_xxx** to manipulate the lcd display and receive keypad events. See **DemoLCDKpd** for example code.

uClinux

Use the Run Time Library functions **lcd_xxx and kpd_xxx** to manipulate the lcd display and receive keypad events. See **uDemoLCDKpd** for example code

Real Time Clock Module

The Real Time Clock Module (RTC) is a standard part on the WildFire, however it is not useful without a backup battery, which is installed only with the optional hibernation module. It is accessed through the RTL which interfaces to the MCF5282 using the I2C bus. Use rtc_set(..) and rtc_get(..) to set and get the RTC time of the RTC.

Optional Hibernation Module

The Hibernation Module is an optional module on the WildFire. It enables the developer to turn off the board via a software call and have the RTC wake the board up after a pre-specified amount of time. Calling rtc_alarm_set(..) sets the alarm and puts the board into hibernation. In hibernation, the board does not draw any current from the power supply; it relies on the battery to keep the RTC and supporting circuitry powered until the alarm wakes up the board. When the alarm wakes up the board, it will power the board and the MCF5282 will go through its initialization and then the user program will run.

The RTC supports hibernation for up to 4 weeks at a time. The WildFire is able to hibernate for up to 200 cumulative days, before having to replace the CR1225 battery.

If it is desired to wake up the board without the RTC's interrupt, short the WKUP pads located between CN4 and CN5 with a pen tip or short wire. This will release the board from hibernation mode and return power to the system. The WKUP pads are shown in Figure 20.

Figure 20: Wake Up Shorting Pads

Caution! Loss of Functionality.

If the Optional Hibernation Module is not installed on the WildFire, calling rtc_alarm_set(..) will not turn the board off.

If the Hibernation Module has been installed on the WildFire, there will be a through-hole battery holder mounted on the board.

Software

dBUG

Use the Run Time Library functions **rtc_xxx** to initialize, set and read from the RTC. See **DemoRTC** for example code.

uClinux

Under uClinux the RTC is accessed through a device driver. The RTC device provides access routines to read, write, and set the alarm for wakeup at a later time. See **uDemoHibernation** for example code.

Watchdog Timer

The Watchdog Timer (WDT) is used to reset the board in the event a program has entered an unexpected state. The WDT is programmed to interrupt the processor after a given period of time. The user, usually in the main loop program, "feeds" the watchdog to ensure that it does not timeout.

Software

The watchdog timer on the MCF5282 is always enabled when the board is reset. Software can only disable the watchdog, and not re-enable it. When the watchdog is on, software must feed it before it times out or the board will reset. Software also has the option of one time reducing the Watchdog maximum timeout. By default the maximum time out is ~8 seconds, it can be reduced once but that is it.

dBUG

Use the Run Time Library functions **wdt_xxx** to initialize and feed the watchdog timer. See **DemoWDT** for example code.

uClinux

The watchdog timer is not directly supported by the Intec uClinux BSP.

Ethernet

General Information

On connection to a network, the “Link” LED located on the left-hand side of the connector indicates a valid link. The “Traffic” LED on the opposite side blinks to indicate activity.

Figure 21: Ethernet Connector

The dbugtcpglue.h and OpenTCP.h files in the RTL define functions that provide Ethernet access. The software installation includes email, HTTP, DHCP, DNS and ARP annotated demo programs.

Advanced Users

The Ethernet PHY chip on board is configured to support Auto-negotiation of 10 and 100 base-T speeds, full-duplex and half-duplex connections. It enables the ZRZ-NRZI conversion, 4B/5B coding and scrambler/descrambler. The MII interface to the PHY chip is connected to PQS5 and PQS6. These signals must be bit-banged to access this interface. The PHY has an address of 0xC. For further information about the PHY, see the ST STE100P Data Sheet.

Software

dBUG

The Ethernet module is supported by a port of the OpenTCP stack. The stack code is provided as a library and has been enhanced slightly by Intec to provide an easier to use interface. Use the **udp_xxx and tcp_xxx** from the Run Time Library to access the Ethernet port. See **DemoHTTP, DemoSMTP, and DemoDNS**.

uClinux

Under uClinux the Ethernet port can be accessed using the TCP/IP stack which is included as part of the uClinux kernel. The physical Ethernet interface (PHY) can be accessed under uClinux using a command line tool called “mii-tool”. For more information about programming TCP/IP under uClinux see the Run Time Library Programmer Reference.

CAN Port

General Description

The MCF5282 has a Controller Area Network module and the WildFire has a CAN transceiver that translates the CAN CMOS signals to CAN strength differential signals. The CAN power line CAN_V+ is not connected internally in the WildFire board; this connection on the terminal block is provided as a placeholder for the CAN power line.

Figure 22: CAN Connector

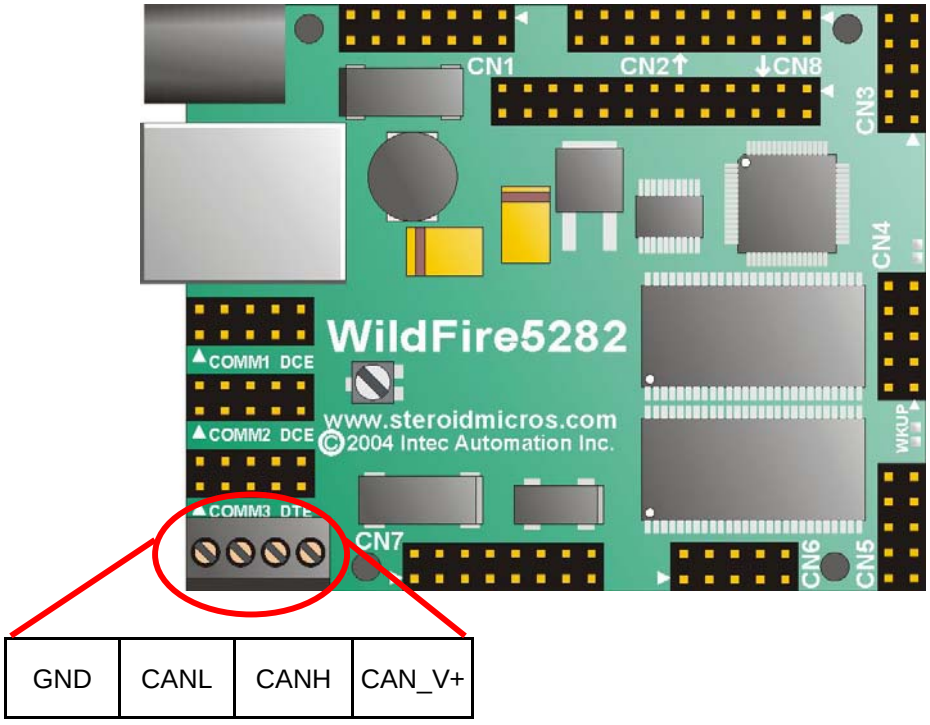

Slew Control

There are two CAN transceivers that have possibly been installed on the WildFire, the Philips TAJ1050 or the MicroChip MCP2551. Each can be identified by the markings on U9, located on the bottom of the WildFire (shown in Figure 23). To determine which part is installed on the WildFire check the part number on the IC.

Table 18: CAN driver part numbers

Driver	Part Number
Philips	TAJ1050TD
MicroChip	MCP2551-I/SN

The only functional difference between the two transceivers is that the TAJ1050 does not support the slew control function that the MCP2551 does. The TAJ1050 will always operate in high-speed mode.

By default the MCP2551 is configured for high-speed mode. It is possible to vary the slew rate on the MCP2551 by removing shunt resistor R17 and replacing it with a resistance value. Use Figure 24 to determine the appropriate resistance to limit the transition time of the CAN bus signals.

Figure 23: Slew Adjustment Resistor for MCP2551 on bottom of WildFire

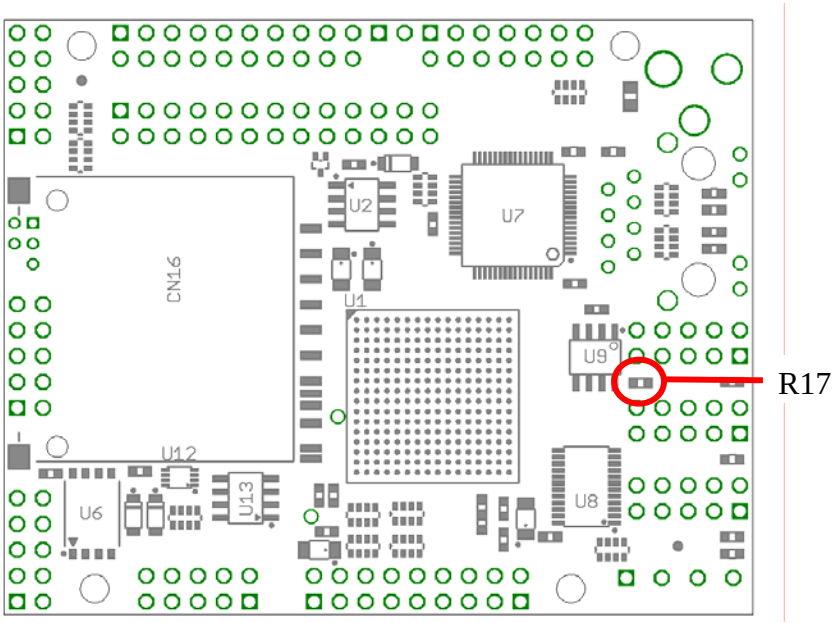

To determine the correct value for R17, refer to Figure 24. By default, a 0 Ohm resistor has been installed, configuring the MCP2551 in high-speed mode. For more details, refer to the MCP2551 Data Sheet.

Figure 24: Slew-Rate vs. R17 Resistance[1]

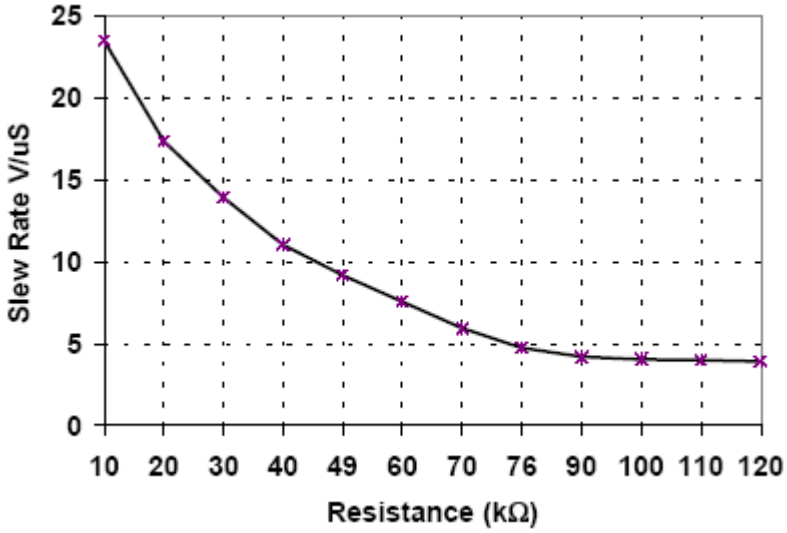

[1] Taken from the Microchip MCP2551 Data Sheet

Software

dBUG

A demonstration CAN program is available upon request to Intec.

uClinux

CAN is not currently supported by the Intec uClinux BSP.

Electrical Specifications

The maximum source/sink current on I/O varies depending on the header it is attached to. Table 1 shows the maximum source/sink current by connector.

Table 1: Maximum Allowable Source and Sink Current by Connector

	Max Current (mA)	
Connector	**Source**	**Sink**
CN1	5.0	5.0
CN2	5.0	5.0
CN3	4.0	8.0
CN4	4.0	8.0
CN5	4.0	8.0
CN6	5.0	5.0
CN7	5.0	5.0
CN8	5.0	5.0

Jumpers and Test Points

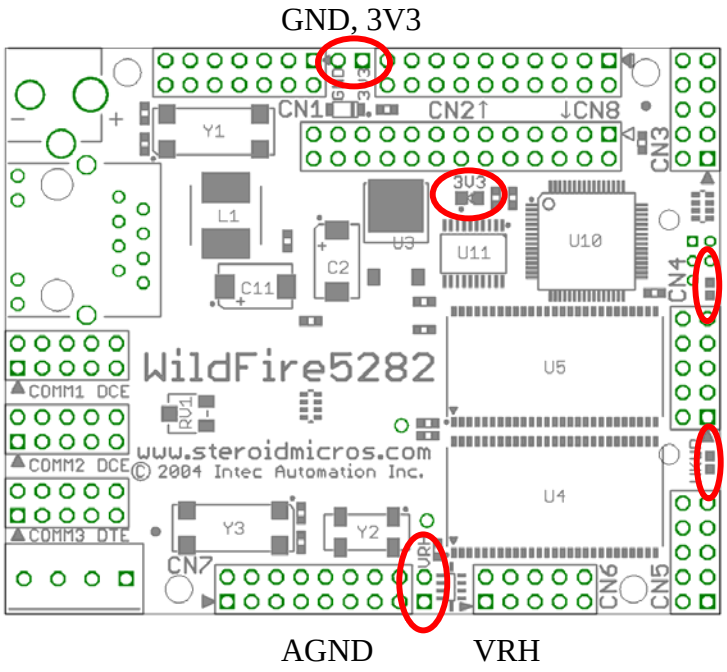

Annex F : Datasheets

F.1. Transductor de tensió LV 25-P

F.2. Transductor de corrent LTS 25-NP

Voltage Transducer LV 25-P

I_{PN} = 10 mA

V_{PN} = 10 .. 500 V

For the electronic measurement of voltages : DC, AC, pulsed..., with a galvanic isolation between the primary circuit (high voltage) and the secondary circuit (electronic circuit).

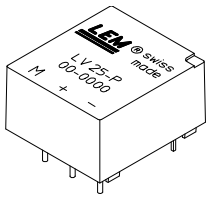

Electrical data

I_{PN}	Primary nominal r.m.s. current		10		mA
I_P	Primary current, measuring range		0 .. ± 14		mA
R_M	Measuring resistance		$R_{M\,min}$	$R_{M\,max}$	
	with ± 12 V	@ ± 10 mA_{max}	30	190	Ω
		@ ± 14 mA_{max}	30	100	Ω
	with ± 15 V	@ ± 10 mA_{max}	100	350	Ω
		@ ± 14 mA_{max}	100	190	Ω
I_{SN}	Secondary nominal r.m.s. current		25		mA
K_N	Conversion ratio		2500 : 1000		
V_C	Supply voltage (± 5 %)		± 12 .. 15		V
I_C	Current consumption		10 (@ ±15 V) + I_S		mA
V_d	R.m.s. voltage for AC isolation test [1], 50 Hz, 1 mn		2.5		kV

Accuracy - Dynamic performance data

X_G	Overall Accuracy @ I_{PN}, T_A = 25°C	@ ± 12 .. 15 V	± 0.9		%
		@ ± 15 V (± 5 %)	± 0.8		%
ε_L	Linearity		< 0.2		%
			Typ	Max	
I_O	Offset current @ I_P = 0, T_A = 25°C			± 0.15	mA
I_{OT}	Thermal drift of I_O	0°C .. + 25°C	± 0.06	± 0.25	mA
		+ 25°C .. + 70°C	± 0.10	± 0.35	mA
t_r	Response time [2] @ 90 % of $V_{P\,max}$		40		µs

General data

T_A	Ambient operating temperature	0 .. + 70	°C
T_S	Ambient storage temperature	- 25 .. + 85	°C
R_P	Primary coil resistance @ T_A = 70°C	250	Ω
R_S	Secondary coil resistance @ T_A = 70°C	110	Ω
m	Mass	22	g
	Standards [3]	EN 50178	

Notes : [1] Between primary and secondary

[2] R_1 = 25 kΩ (L/R constant, produced by the resistance and inductance of the primary circuit)

[3] A list of corresponding tests is available

Features

- Closed loop (compensated) voltage transducer using the Hall effect
- Insulated plastic case recognized according to UL 94-V0.

Principle of use

- For voltage measurements, a current proportional to the measured voltage must be passed through an external resistor R_1 which is selected by the user and installed in series with the primary circuit of the transducer.

Advantages

- Excellent accuracy
- Very good linearity
- Low thermal drift
- Low response time
- High bandwidth
- High immunity to external interference
- Low disturbance in common mode.

Applications

- AC variable speed drives and servo motor drives
- Static converters for DC motor drives
- Battery supplied applications
- Uninterruptible Power Supplies (UPS)
- Power supplies for welding applications.

981125/14

Dimensions LV 25-P (in mm. 1 mm = 0.0394 inch)

Bottom view

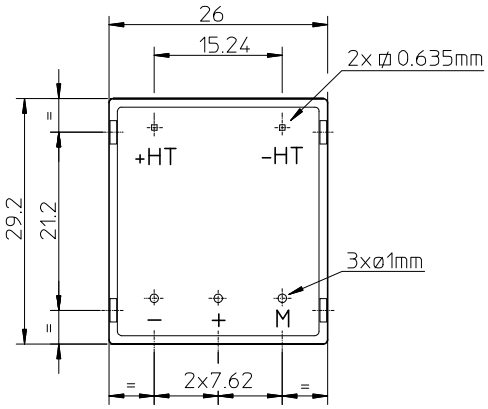

Right view

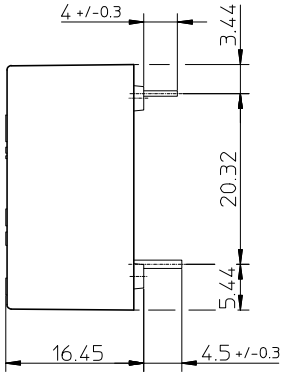

Top view

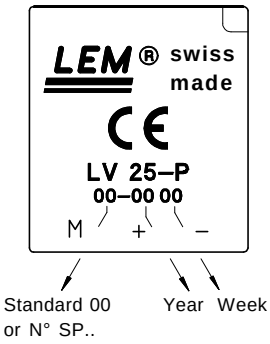

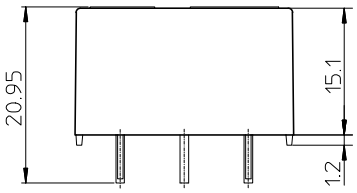

Back view

Secondary terminals

Terminal + : supply voltage + 12 .. 15 V
Terminal M : measure
Terminal - : supply voltage - 12 .. 15 V

Connection

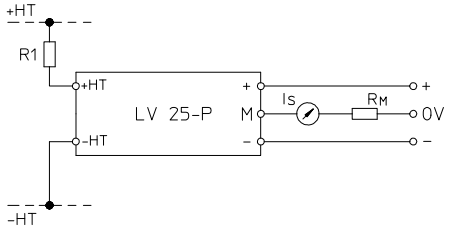

Mechanical characteristics

• General tolerance	± 0.2 mm
• Fastening & connection of primary	2 pins 0.635 x 0.635 mm
• Fastening & connection of secondary	3 pins ∅ 1 mm
• Recommended PCB hole	1.2 mm

Remarks

- $\mathbf{I}_S$ is positive when $\mathbf{V}_P$ is applied on terminal +HT.
- This is a standard model. For different versions (supply voltages, turns ratios, unidirectional measurements...), please contact us.

Instructions for use of the voltage transducer model LV 25-P

Primary resistor $\mathbf{R}_1$: the transducer's optimum accuracy is obtained at the nominal primary current. As far as possible, $\mathbf{R}_1$ should be calculated so that the nominal voltage to be measured corresponds to a primary current of 10 mA.

Example: Voltage to be measured $\mathbf{V}_{PN}$ = 250 V
a) $\mathbf{R}_1$ = 25 kΩ / 2.5 W, $\mathbf{I}_P$ = 10 mA Accuracy = ± 0.8 % of $\mathbf{V}_{PN}$ (@ $\mathbf{T}_A$ = + 25°C)
b) $\mathbf{R}_1$ = 50 kΩ / 1.25 W, $\mathbf{I}_P$ = 5 mA Accuracy = ± 1.6 % of $\mathbf{V}_{PN}$ (@ $\mathbf{T}_A$ = + 25°C)

Operating range (recommended) : taking into account the resistance of the primary windings (which must remain low compared to $\mathbf{R}_1$ in order to keep thermal deviation as low as possible) and the isolation, this transducer is suitable for measuring nominal voltages from 10 to 500 V.

LEM reserves the right to carry out modifications on its transducers, in order to improve them, without previous notice.

Current Transducer LTS 25-NP

I_{PN} = 25 At

For the electronic measurement of currents : DC, AC, pulsed, mixed, with a galvanic isolation between the primary circuit (high power) and the secondary circuit (electronic circuit).

16054

Electrical data

I_{PN}	Primary nominal r.m.s. current		25	At
I_P	Primary current, measuring range		0 .. ± 80	At
V_{OUT}	Analog output voltage @ I_P		$2.5 \pm (0.625 \cdot I_P/I_{PN})$	V
	$I_P = 0$		2.5 [1]	V
N_S	Number of secondary turns (± 0.1 %)		2000	
R_L	Load resistance		≥ 2	kΩ
R_{IM}	Internal measuring resistance (± 0.5 %)		50	Ω
TCR_{IM}	Thermal drift of R_{IM}		< 50	ppm/K
V_C	Supply voltage (± 5 %)		5	V
I_C	Current consumption @ V_C = 5 V	Typ	$28 + I_S$ [2] $+ (V_{OUT}/R_L)$	mA

Accuracy - Dynamic performance data

X	Accuracy @ I_{PN}, T_A = 25°C		± 0.2		%
	Accuracy with R_{IM} @ I_{PN}, T_A = 25°C		± 0.7		%
ε_L	Linearity error		< 0.1		%
			Typ	Max	
TCV_{OUT}	Thermal drift of V_{OUT} @ I_P = 0	- 10°C .. + 85°C	50	100	ppm/K
		- 40°C .. - 10°C		150	ppm/K
$TC\varepsilon_G$	Thermal drift of the gain	- 40°C .. + 85°C		50 [3]	ppm/K
V_{OM}	Residual voltage @ I_P = 0, after an overload of 3 x I_{PN}			± 0.5	mV
		5 x I_{PN}		± 2.0	mV
		10 x I_{PN}		± 2.0	mV
t_{ra}	Reaction time @ 10 % of I_{PN}		< 100		ns
t_r	Response time @ 90 % of I_{PN}		< 400		ns
di/dt	di/dt accurately followed		> 60		A/µs
f	Frequency bandwidth (0 .. - 0.5 dB)		DC .. 100		kHz
	(- 0.5 .. 1 dB)		DC .. 200		kHz

General data

T_A	Ambient operating temperature	- 40 .. + 85	°C
T_S	Ambient storage temperature	- 40 .. + 100	°C
	Insulating material group	IIIa	
m	Mass	10	g
	Standards [4]	EN 50178 : 1997	
		IEC 60950-1: 2001	

Notes : [1] Absolute value @ T_A = 25°C, $2.475 < V_{OUT} < 2.525$

[2] $I_S = I_P/N_S$

[3] Only due to TCR_{IM}

[4] Specification according to IEC 1000-4-3 are not guaranteed between 180 and 220 MHz.

Features

- Closed loop (compensated) multi-range current transducer using the Hall effect
- Unipolar voltage supply
- Insulated plastic case recognized according to UL 94-V0
- Compact design for PCB mounting
- Incorporated measuring resistance
- Extended measuring range.

Advantages

- Excellent accuracy
- Very good linearity
- Very low temperature drift
- Optimized response time
- Wide frequency bandwidth
- No insertion losses
- High immunity to external interference
- Current overload capability.

Applications

- AC variable speed drives and servo motor drives
- Static converters for DC motor drives
- Battery supplied applications
- Uninterruptible Power Supplies (UPS)
- Switched Mode Power Supplies (SMPS)
- Power supplies for welding applications.

Application domain

- Industrial.

Copyright protected.

Current Transducer LTS 25-NP

Isolation characteristics

V_d	R.m.s. voltage for AC isolation test, 50/60 Hz, 1 mn	3	kV
$\hat{V}_w$	Impulse withstand voltage 1.2/50 µs	> 8	kV
		Min	
V_e	R.m.s. voltage for partial discharge extinction @ 10pC	> 1.5	kV
		Min	
dCp	Creepage distance [5]	15.5	mm
dCl	Clearance distance [6]	6.35	mm
CTI	Comparative Tracking Index (Group III a)	175	

Application examples

According to EN 50178 and IEC 61010-1 standards and following conditions :

- Over voltage category OV 3
- Pollution degree PD2
- Non-uniform field

	EN 50178	IEC 61010-1
dCp, dCl, $\hat{V}_w$	Rated isolation voltage	Nominal voltage
Single isolation	600 V	600 V
Reinforced isolation	300 V	300 V

Notes : [5] On housing
[6] On PCB with soldering pattern UTEC93-703.

Safety

This transducer must be used in electric/electronic equipment with respect to applicable standards and safety requirements in accordance with the following manufacturer's operating instructions.

Caution, risk of electrical shock

When operating the transducer, certain parts of the module can carry hazardous voltage (eg. primary busbar, power supply).
Ignoring this warning can lead to injury and/or cause serious damage.
This transducer is a built-in device, whose conducting parts must be inaccessible after installation.
A protective housing or additional shield could be used.
Main supply must be able to be disconnected.

Dimensions LTS 25-NP (in mm. 1 mm = 0.0394 inch)

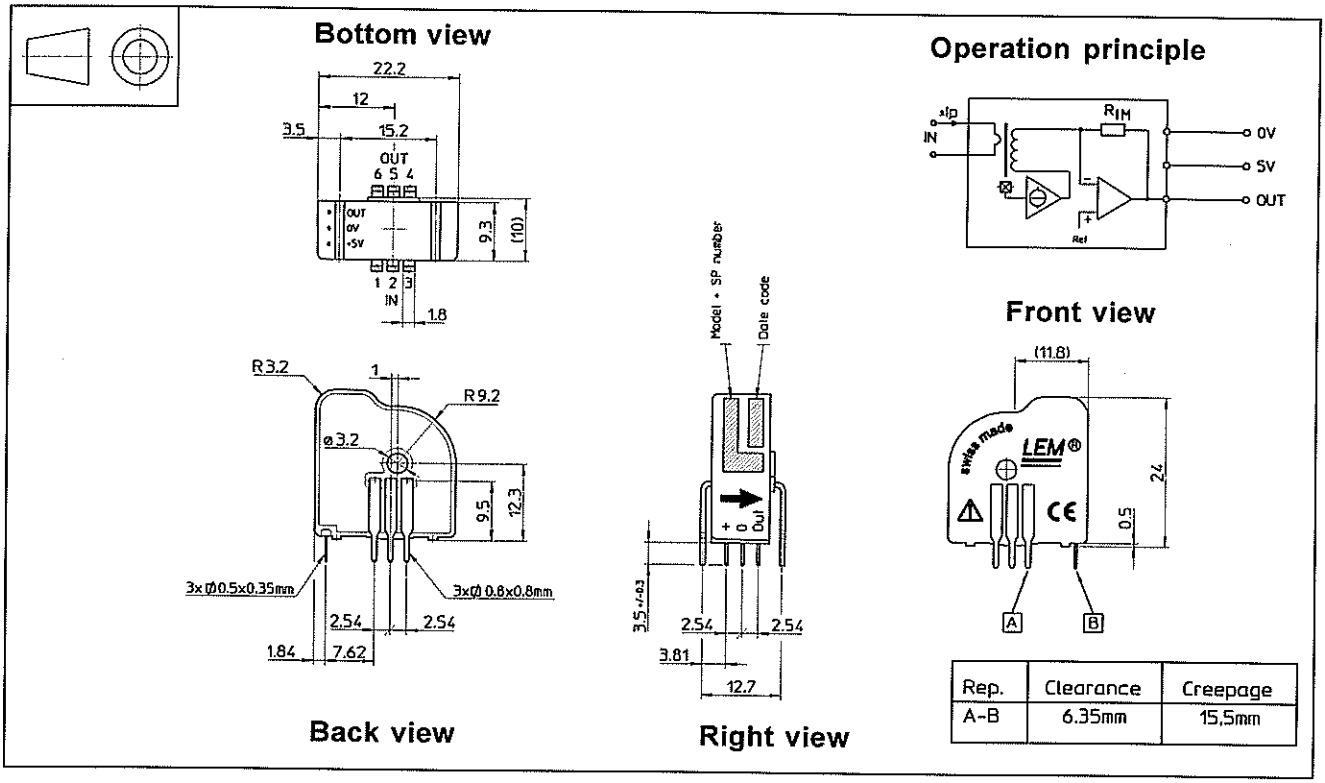

Rep.	Clearance	Creepage
A-B	6.35mm	15.5mm

Number of primary turns	Primary nominal r.m.s. current I_{PN} [A]	Nominal output voltage V_{OUT} [V]	Primary resistance R_P [mΩ]	Primary insertion inductance L_P [µH]	Recommended connections
1	± 25	2.5 ± 0.625	0.18	0.013	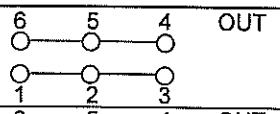
2	± 12	2.5 ± 0.600	0.81	0.05	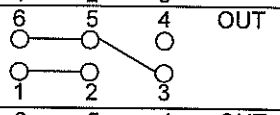
3	± 8	2.5 ± 0.600	1.62	0.12	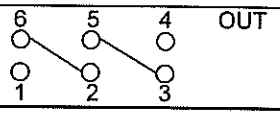

Mechanical characteristics

- General tolerance ± 0.2 mm
- Fastening & connection of primary 6 pins 0.8 x 0.8 mm
  Recommended PCB hole 1.3 mm
- Fastening & connection of secondary 3 pins 0.5 x 0.35 mm
  Recommended PCB hole 0.8 mm
- Additional primary through-hole ∅ 3.2 mm

Remarks

- V_{OUT} is positive when I_P flows from terminals 1, 2, 3 to terminals 6, 5, 4.
- Temperature of the primary jumper should not exceed 100°C.

Output Voltage - Primary Current

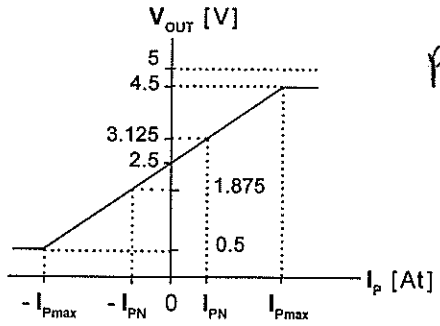

Pmax=80

Annex G : Motors Mavilor

MAVILOR

INFRANOR GROUP COMPANY

Motors

ISSUE 2001

AC Servo Motors
MA Series

- The short mechanical time constant makes it ideal for control operations.
- An extremely short electrical constant provides high peak torque at high speed.
- A high "theoretical" acceleration gives an extremely fast response time.
- High stall torque due to the absence of commutators bars.
- Low thermal resistance provides low working temperatures.
- High power to weight ratio, ideal for manipulator mounted motors.
- Air gap design, small diameter and short length.
- For many applications a separate position sensor is not required, the resolver can be used for deriving a position feed back signal as well as speed/current information.

Performance Curves

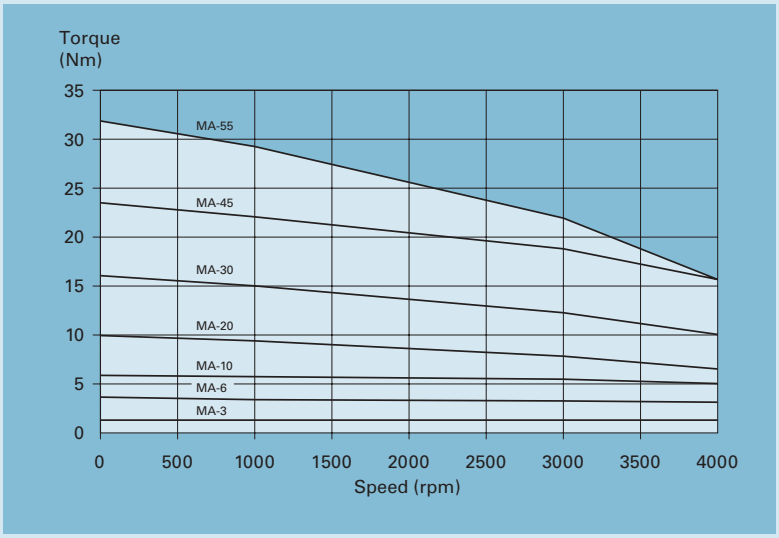

Technical Specifications

ALL CHARACTERISTICS MEASURED AT 25°C AMBIENT TEMPERATURE	SYMBOLS	UNITS	MA-3	MA-6	MA-10	MA-20	MA-30	MA-45	MA-55
MAX MECHANICAL SPEED	n	rpm	9000	6000	6000	6000	6000	6000	6000
STALL TORQUE (1) ±10%	M_S	Nm	1.3	3.6	5.8	10.0	16.0	23.4	31.8
STALL CURRENT	I_S	A	2.2	4.2	6.8	10.3	16.5	24.1	32.7
PEAK TORQUE ±10%	M_J	Nm	5.2	28.5	40.7	69.8	96.0	140.5	190.8
TORQUE-WEIGHT RATIO ±10%	T_W	Nm/kg	0.7	0.8	1.1	1.2	1.6	1.7	1.9
EMF CONSTANT ±5%	K_E	Vs/rad	0.3	0.5	0.5	0.6	0.6	0.6	0.6
TORQUE CONSTANT ±5%	K_T	Nm/A	0.6	0.9	0.9	1.0	1.0	1.0	1.0
RELUCTANCE TORQUE ±10%	T_R	Nm	<0.02	<0.1	<0.1	<0.2	<0.3	<0.4	<0.6
WINDING RESISTANCE ±5%	R	Ω	10.2	5.3	2.2	1.4	0.5	0.4	0.2
WINDING INDUCTANCE ±5%	L	mH	25.0	11.6	8.0	7.0	4.0	2.7	1.9
ROTOR INERTIA	J	kg m^2 10^{-3}	0.04	0.30	0.40	0.80	1.60	2.20	3.60
MECHANICAL TIME CONSTANT	τ_M	ms	2.0	3.8	2.1	2.1	1.6	1.6	1.6
ELECTRICAL TIME CONSTANT	τ_E	ms	2.5	2.2	3.6	5.0	7.5	6.6	7.6
THERMAL TIME CONSTANT	τ_{TH}	s	1,500	1,500	1,800	1,500	1,500	1,500	1,500
THERMAL RESISTANCE	R_{TH}	°C/W	1.1	0.6	0.5	0.4	0.4	0.2	0.2
MASS (motor with resolver)	M	kg	1.9	4.4	5.3	8.2	10.0	14.0	16.8
RADIAL LOAD (at mid-length of shaft)	F_R	N	218	410	410	600	600	830	830
AXIAL LOAD	F_A	N	218	225	225	390	390	410	410
INSULATION			CLASS-F						
PROTECTION			IP-54						
(1) With an aluminium heat sink plate			300x300x10		400x400x10			830x830x10	

Resolver Specifications

	UNITS	2T8 (Transmitter Speed 1)
Input Voltage/Frecuency	V/kHz	10/4.5
Primary Element		Rotor
Number of Speed		1X
Transformation Ratio		0.5 ± 5%
Electrical Error	minutes	±10 max.
Dielectric Strength	VAC/1 minute	500
Mass	kg	0.230
Rotor Moment of Inertia	kg m^2 10^{-3}	0.0123
Operating Temperature Range	°C	-55 ~ +155

Brake Specifications

	SIZE	TORQUE Nm	INERTIA kg cm^2	MASS kg
MA-3	07 (*)	1	0.08	0.3
MA-6 / 10	10	4	0.30	0.8
MA-20 / 30	10	8	0.30	0.8
MA-45 / 55	10	12	0.30	0.8
(*) With chopper				

The MA Series incorporates the option of a fail-safe holding brake within the structure of the motor which holds the shaft without backlash on loss of electric current.

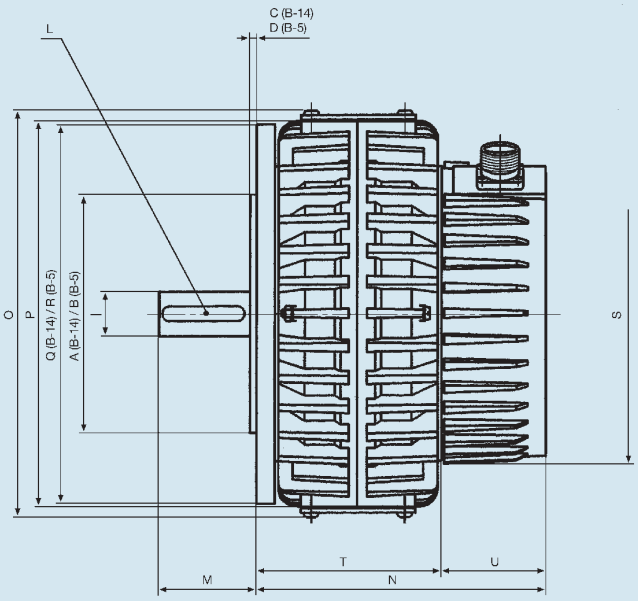

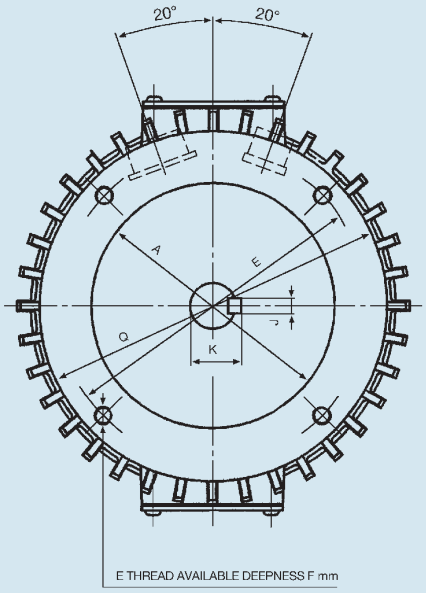

FLANGE B-14

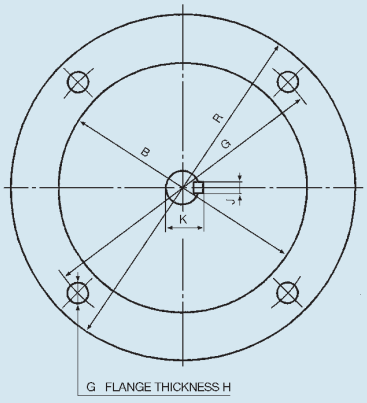

FLANGE B-5 (OPTIONAL)

MA-3

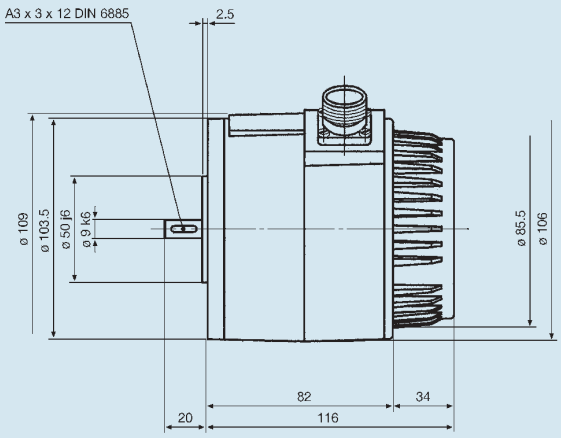

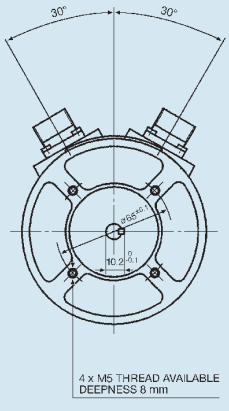

FLANGE B-14

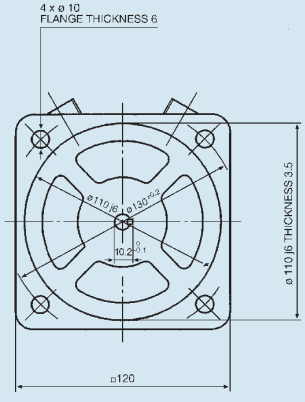

FLANGE B-5 (OPTIONAL)

AC Servo Motors
MA Series

Dimensions

	MA-6	MA-10	MA-20	MA-30	MA-45	MA-55
A (j6)	ø95		ø130		ø180	
B (j6)	ø180				ø250	
C	3		3.5		4	
D	4				5	
E	ø115 4xM8		ø165 4xM10		ø215 4xM12	
F	10				12	
G	ø215 4xø15				ø300 4xø19	
H	10				17	
I (k6)	ø14		ø24		ø28	
J (N9)	5		8			
K ($^{0}_{-0.1}$)	16		27		31	
L (DIN 6885)	A5x5x28		A8x7x45		A8x7x50	
M	34		50		60	
N	137.5		152.5	161.5	174	
O	ø178		ø218		ø278	
P	ø170		ø210		ø270	
Q	ø140		ø186		ø242	
R	ø250				□265	
S	ø165					
T	80		95	104	116.5	
U	57.5					

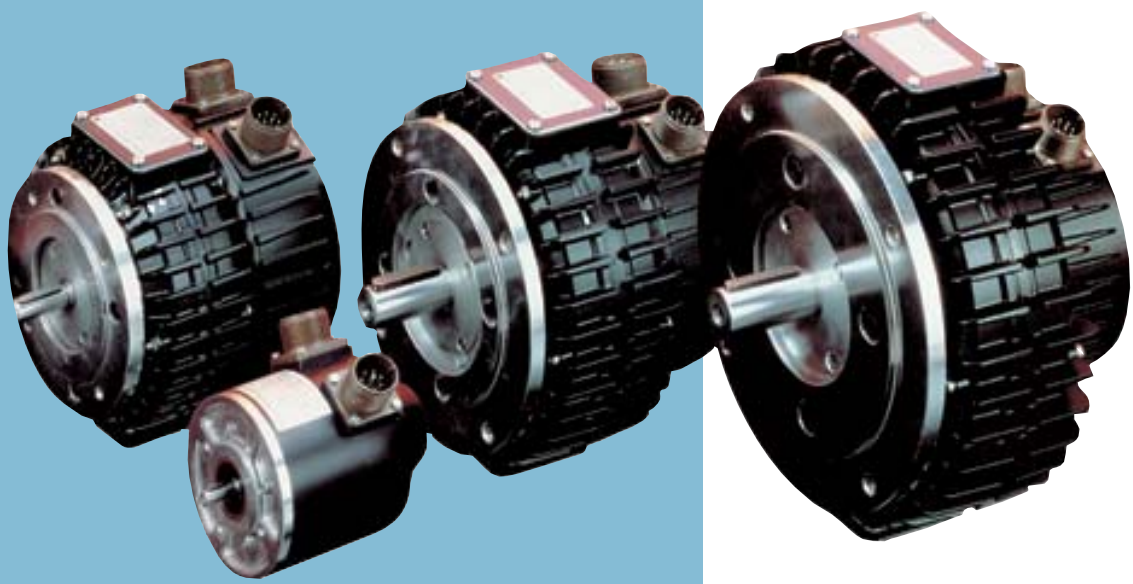

Optional Accesories

MSS Encoder Kit (no encoder)

	l
MSS-2	235
MSS-4	233
MSS-6	233
MSS-8	243.5
MSS-12	237.5
MSS-22	265.5
MSS-35	291
MSS-45	291

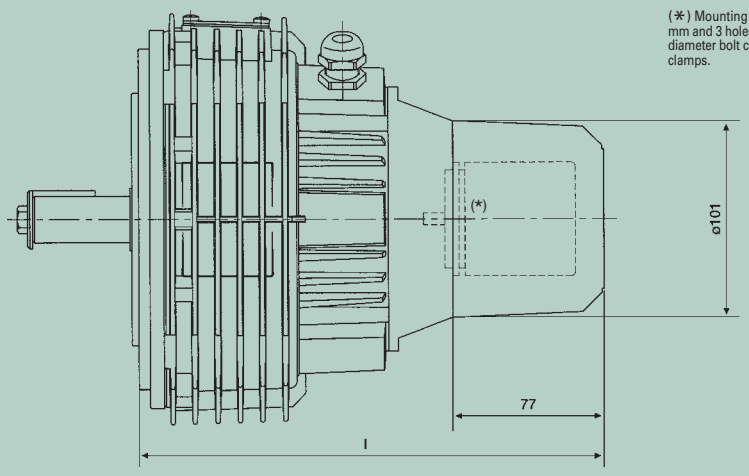

(*) Mounting pilot of 50 mm and 3 holes M4 on a 67,3 diameter bolt circle for fixing clamps.

MA Encoder Kit (no encoder)

	A
MA-6	237.5
MA-10	237.5
MA-20	252.5
MA-30	261.5
MA-45	274
MA-55	274

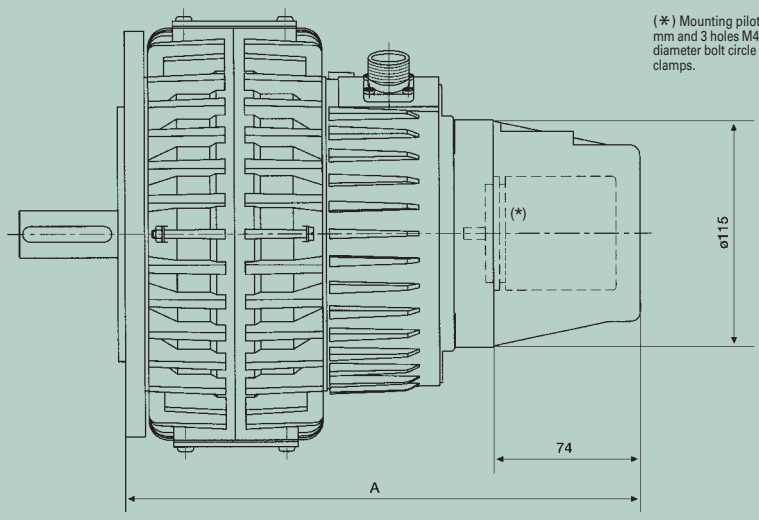

(*) Mounting pilot of 50 mm and 3 holes M4 on a 67,3 diameter bolt circle for fixing clamps.

BL 110/140 Encoder Kit (no encoder)

	A
BL-111	282
BL-112	307
BL-113	332
BL-114	357
BL-115	382
BL-141	346
BL-142	367
BL-143	411
BL-144	453

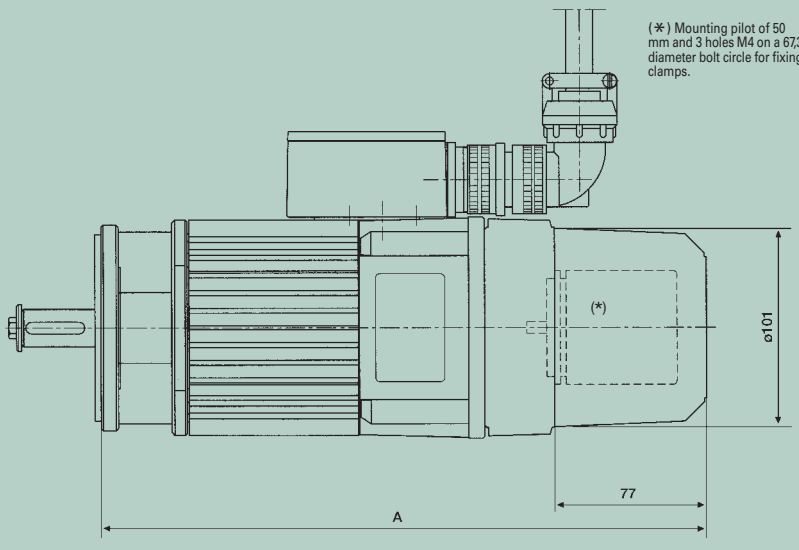

(*) Mounting pilot of 50 mm and 3 holes M4 on a 67,3 diameter bolt circle for fixing clamps.

Annex H : Infranor SMT-BD1

INFRANOR
SERVO DRIVES & MOTION CONTROL

SMT-BD1

gb

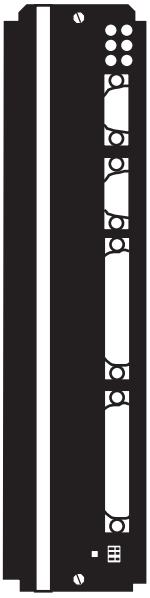

SMT-BD1
digital drive for AC sinusoidal synchronous motors

Chapter 2 - Specifications

1 - TECHNICAL SPECIFICATIONS

Operating voltage	DC bus 310 VDC (270 V < DC bus < 340 VDC max.)
Auxiliary supply voltage	310 VDC (200 V < Uaux < 340 VDC max.)
Motor terminal to terminal output voltage	200 Vrms for DC bus 310 VDC

Output currents for the **Fusing mode of the I^2t protection** (see Chapter 8, part 3.3)

AMPLIFIER TYPE	U rated (Vrms)	Imax (Arms) 1 s	Max. authorized rated current (Arms) of the amplifier		
			Without fan*	Fan type 1*	Fan type 2*
SMT-BD1-220/04	240	4,4	2		
SMT-BD1 -220/08	240	8,8	4		
SMT-BD1-220/12	240	13,8	6		
SMT-BD1-220/17	240	17,7	8,5		
SMT-BD1-220/30	240	30,8	10	12	15
SMT-BD1-220/30r	240	30,8	10	15	
SMT-BD1-220/45	240	48,6	10	15	20
SMT-BD1-220/45r	240	48,6	10	20	23
SMT-BD1-220/60	240	61	10	19	25
SMT-BD1-220/60r	240	61	12	26	30
SMT-BD1-220/70	240	70	25	30	35
SMT-BD1-220/100	240	100	25	30	35

Output currents for the **Limiting mode of the I^2t protection** (see Chapter 8, part 3.3)

AMPLIFIER TYPE	U rated (Vrms)	Imax (Arms) 1 s	Max. authorized continuous current (Arms) of the amplifier		
			Without fan*	Fan type 1*	Fan type 2*
SMT-BD1-220/04	240	4,4	2		
SMT-BD1 -220/08	240	8,8	4		
SMT-BD1-220/12	240	13,8	6		
SMT-BD1-220/17	240	17,7	8,5	8,5	
SMT-BD1-220/30	240	30,8	8,5	12	15
SMT-BD1-220/30r	240	30,8	10	15	
SMT-BD1-220/45	240	48,6	8,5	15	18
SMT-BD1-220/45r	240	48,6	10	20	23
SMT-BD1-220/60	240	61	8,5	17	20
SMT-BD1-220/60r	240	61	12	26	30
SMT-BD1-220/70	240	70	17	30	35
SMT-BD1-220/100	240	100	25	30	35

* Maximum ambient temperature = + 40° C, fan 1 = 56 l/s, fan 2 = 90 l/s

Note: The **SMT-BD1**-X/Xr amplifier types are equipped with an additional heatsink in order to improve the heat dissipation and increase their rated current. The width of these amplifier types is then 18 TE instead of 12 TE.

Switching frequency PWM	10 KHz
Minimum inductance between phases	1 mH
Current regulator (PI)	adjusted to motor

Current loop bandwidth	Cut-off frequency for 45° phase shift: > 1 KHz
Internal current limitation	Imax: 20 % to 100 % and I rated: 20 % to 50 % Imax duration =1 second
External current limitation	0 to 10 V (resolution = 12 bits) 100 to 0 % of the internal Imax limitation
Analog speed input command	±10 V, standard resolution = 12 bits and 16 bits in option
Motor accel/decel ramp range	From 0 to 30 s between zero speed and max. speed
Speed regulator P, PI or PI^2	Sampling period = 0,5 ms Anti-wind-up system of the integrator Antiresonance filter Adjustable digital gains
Speed loop bandwidth	Cut-off frequency for 45° phase shift Selectable : 50 Hz, 75 Hz or 100 Hz
Max. motor speed	Adjustable from 100 rpm to 14000 rpm
Speed range	1 : 2048 with 12 bits input command 1 : 32768 with 16 bits input command
Encoder position output **(*)**	Two A and B channels in quadrature with n marker pulse(s) per revolution. Programmable resolution: max. 8192 ppr up to 900 rpm max. 4096 ppr up to 3600 rpm max. 1024 ppr up to 14000 rpm Accuracy: 8 arc minutes + 1/4 point (2 arc minutes + 1/4 point on special request)

(*) The total position accuracy must take into account the accuracy of the resolver used.

Analog outputs (test points)	Speed input command (CV): ±10 V for ± max. speed Speed monitor (GT): ±8 V for ±14000 rpm, linearity: 10 % Current input command (I DC): ±10V for amplifier current rating, DAC OUT 1: 8 bits resolution Current monitor (Imon.): ± 10 V for amplifier current rating, DAC OUT 2: 8 bits resolution
Logic inputs	Enable / Disable: ENABLE Limit switch +: FC+ Limit switch - : FC- Current command: CI Zero speed input command: CV0 Reset: RAZ
Logic outputs	Relay contact Umax = 50 V, Imax = 100 mA, Pmax = 10 W "Amp ready": closed if amplifier OK, open if fault "Power ready": closed if power OK, open if fault IDYN signal: open if I^2t threshold is reached

Error display	LED on front panel and diagnostic by serial link
Motor and application parameter setting	Serial link RS232 (standard) or RS422 / 485 (option)
Automatic functions	Amplifier adjustment to the motor (AUTOPHASING) Automatic regulator tuning (AUTOTUNING) Offset compensation on analog input CV
Conformity with the standards: **CE** approval with multiaxis power supply configuration BF rack and mains filter BF 35 or 70, or SMT-BM 20 A single-axis rack and BF 35 filter. "360°" shields; equipotentiality according to the wiring rules.	Standards regarding the Electromagnetic Compatibility: - Immunity: CEI standards 801- 2 - 3 - 4 - Conducted and radiated disturbances: EN 55011, Group 1, class A Electrical standards for industrial machines: - EN 60204.1: - Insulator: 1500 VAC/1 min. - Leakage current > 3 mA (EMI filters)
Temperature - storage - 20°C to + 70°C - operation 5°C to +40°C	From 40°C on, the rated currents must be reduced of 3 %/°C. Max. temperature: 50°C
Altitude	1000 m
Moisture	< 50 % at 40°C and < 90 % at 20°C: (EN 60204.1 standard)
Cooling	Natural convection or forced air, according to the rated current (see current table)

2 - BLOCK DIAGRAM

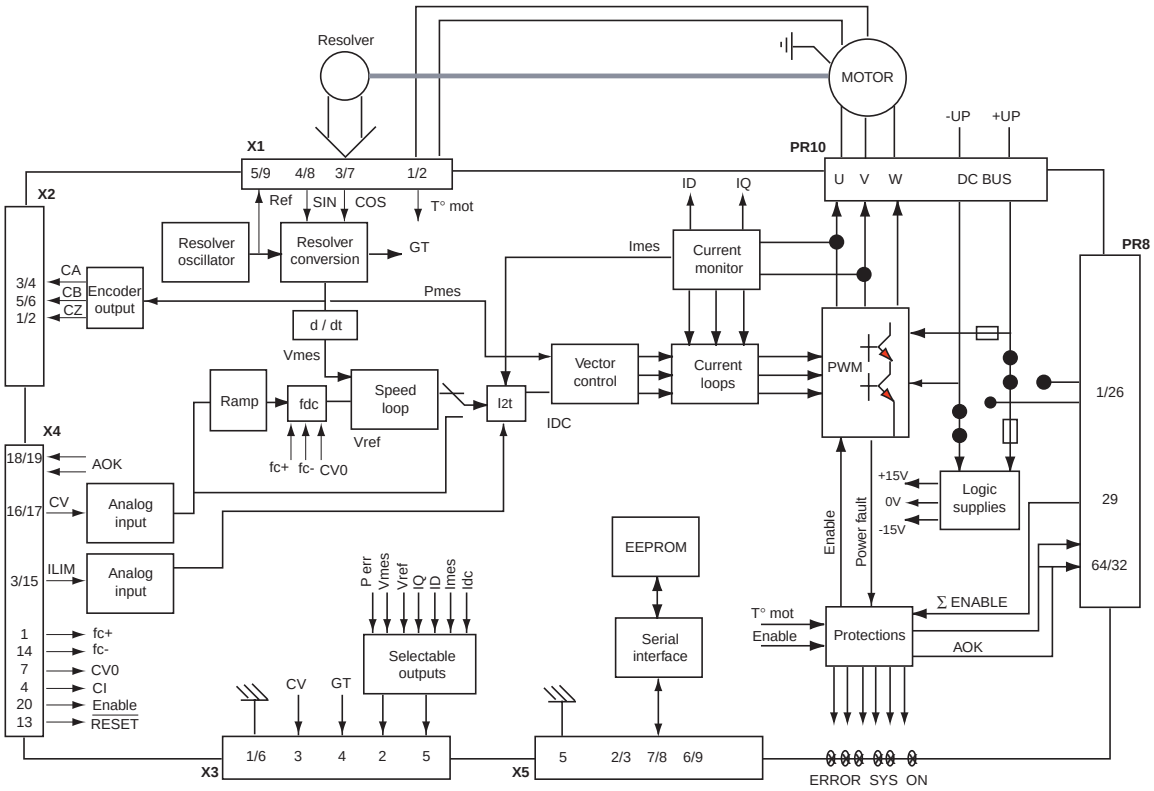

3 - MAIN PROTECTIONS

3.1 - DISPLAYED PROTECTIONS

PROTECTION	ERROR DISPLAY	LED*
Amplifier rated current overload (see Chapter 8, part 3.3) - blinking display = Idyn signal (I^2t threshold is reached) - continuous display = amplifier inhibited (I^2t fault)	I^2 t	● ❍ ❍ ❍
Resolver cable interruption	Resolver	❍ ● ❍ ❍
Power stage failure: - power supply overvoltage - internal switch protection - short-circuit between phases - amplifier overtemperature for 4A to 60 A current ratings	Power stage	● ● ❍ ❍
Resolver converter failure	R. D. C	❍ ❍ ● ❍
Amplifier overtemperature for 70A and 100 A current ratings	°C Amp	● ❍ ● ❍
Power supply undervoltage	Undervolt.	❍ ● ● ❍
Motor overtemperature	°C Motor	● ● ● ❍
Fault of the amplifier parameter storage	EEPROM	● ❍ ● ●
Amplifier automatic procedure: - blinking display = procedure operating - continuous display = operating error	Busy	● ● ● ●

❍ : LED is unlit ● : LED is lit.

All these faults are memory stored in the amplifier except for the fault "Undervolt."

The reset of a stored fault can be made:
- by means of the RESET function in the **BPCW** software
- via the fault RESET input (pin 13 of the X4 connector)
- by switching off the amplifier power supply.

3.2 - FUSE PROTECTION

F1 : Control of the average DC current of the power board supply (see chapter 8).
F2 : Control of the average DC current of the logic board supply (see chapter 8).

AMPLIFIER TYPE	F1 Power	F2 Logic
SMTBD1-220/04 to 12	10 AT	1 A
SMTBD1-220/17 and 30	15 AT	1 A
SMTBD1-220/45	20 AT	1 A
SMTBD1-220/60	20 AT	1 A
SMTBD1-220/70	30 AT	5 AT
SMTBD1-220/100	30 AT	5 AT

Chapter 3 - Inputs-Outputs

1 - CONNECTORS LOCATION

1.1 - RACK CONNECTORS

See manuals pertaining to the SMT-BM 20 A - BMM 05 F – BMM 05 AF single-axis racks and the BF rack.

1.2 – AMPLIFIER CONNECTORS

Leds	Faults display
X1	Resolver
X5	Serial link
X2	Encoder output
X4	Command
X3	Test and Offset push button

2 - X1 RESOLVER CONNECTOR (Sub D 9 pins female)

PIN	FUNCTION	REMARKS
1	TC (pin H sensor connector)	If thermal switch connected to X1
6	Shield connection	If no "360°" connection on the connector
2	TC (pin I sensor connector)	If thermal switch connected to X1
7	S1 (pin C sensor connector)	MAVILOR motor with TAMAGAWA resolver
3	S3 (pin D sensor connector)	MAVILOR motor with TAMAGAWA resolver
8	S4 (pin B sensor connector)	MAVILOR motor with TAMAGAWA resolver
4	S2 (pin A sensor connector)	MAVILOR motor with TAMAGAWA resolver
9	R2 (pin F sensor connector)	MAVILOR motor with TAMAGAWA resolver
5	R1 (pin E sensor connector)	MAVILOR motor with TAMAGAWA resolver

For resolver connections other than the TAMAGAWA resolver on MAVILOR motors, please see resolver wiring table in Chapter 8 (Appendix), part 2.

3 - X2 POSITION CONNECTOR (Sub D 25 pins female)

PIN	FUNCTION	I / O	REMARKS
1	Marker Z/	O	Differential output of the encoder marker pulse (5 V, 20 mA max.)
2	Marker Z	O	Differential output of the encoder marker pulse
3	Channel A/	O	Differential output of the encoder channel A/ (5 V, 20 mA max.)
4	Channel A	O	Differential output of the encoder channel A
5	Channel B/	O	Differential output of the encoder channel B/ (5 V, 20 mA max.)
6	Channel B	O	Differential output of the encoder channel B
7	0 V	O	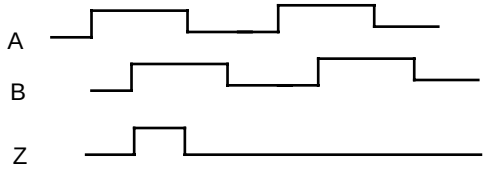
8 and 9	reserved		
10 and 11	0 V	O	
12,13,14	reserved		
15,16,17	reserved		
18 and 19	reserved		
20,21,22	reserved		
23,24	reserved		
25	0 V	O	

4 - X3 TEST CONNECTOR

PIN	FUNCTION	REMARKS
1 - 6	0 Volt	
2	Current input command I DC	± 10 V; resolution: 8 bits, linearity: 2 % (DAC out 1)*
3	Speed input command CV	± 10 V for ± max. speed
4	Speed monitor GT	± 8 V for ± 14000 rpm
5	Current monitor I mes	± 10 V; resolution: 8 bits, linearity: 2 % (DAC out 2)*

* 10 V for amplifier current rating

Linearity = 10 % for logic board type 01612A, 01612B or 01612C.

5 - X4 INPUT - OUTPUT COMMAND CONNECTOR (Sub D 25 pins male)

Pin	Function	I / O	REMARKS
1	Limit switch +	I	Positive or negative logic (see Chapter 8, part 4)
14	Limit switch -	I	Positive or negative logic (see Chapter 8, part 4)
24	0 Volt of limit switch	I	
20	ENABLE	I	Positive or negative logic (see Chapter 8, part 4)
23	0 Volt ENABLE	I	
4	Current command CI	I	Positive or negative logic (see Chapter 8, part 4)
7	CV0 Zero speed input command	I	Positive or negative logic (see Chapter 8, part 4)
25	0 Volt	I	
13	RESET	I	Resets amplifier via 0 V (contact between 13 and 12)
12	0 Volt of RESET input	I	
17	+ Input command CV +	I	± 10 V speed input command for max. speed
16	- Input command CV -	I	or current ± 10 V input command for Imax with "CI" input active
15	0 Volt speed input command CV	I	
3	Current limitation I limit	I	External current limitation 0 to 10 V for 100 % to 0 % of Imax
10	Speed monitor output	O	± 8 V for ± 14000 rpm; linearity: 10 %; max. load: 10 mA
2	Current monitor output	O	± 10 V; resolution: 8 bits; load: 10 mA; (DAC out 2)
11	0 Volt analog output	O	10 V for amplifier current size.
8, 9	I dyn signal	O	Relay contact: open if I dyn threshold is reached Pmax = 10 W with Umax = 50 V or Imax = 100 mA
18, 19	Amplifier ready	O	Relay contact: closed if amplifier OK, open if fault. Pmax = 10 W with Umax = 50 V or Imax = 100 mA
21	+ 15 V	O	50 mA maximum output current
22	- 15 V	O	50 mA maximum output current
5, 6	non connected		

For the use of a negative command logic, please see Chapter 8, part 4.1.

5.1 - SPECIFICATION OF THE ANALOG INPUTS

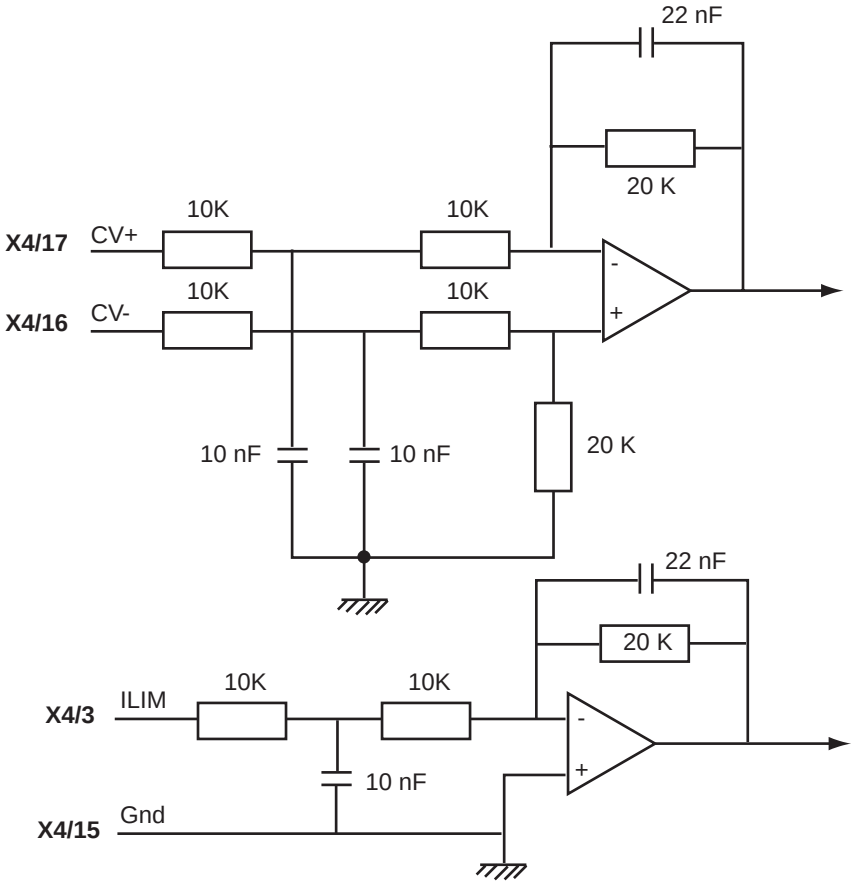

5.2 - SPECIFICATION OF THE LOGIC INPUTS / OUTPUTS

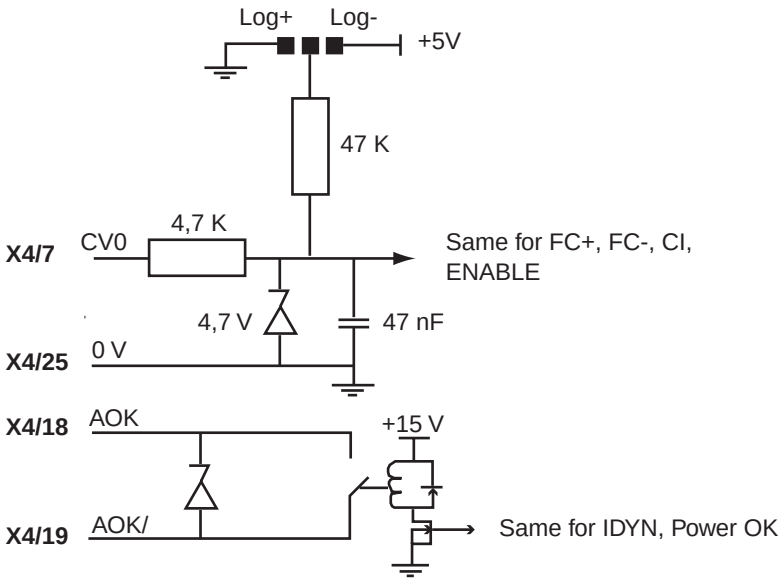

6 - X5 SERIAL LINK (Sub D 9 pins male)

PIN	FUNCTION	REMARKS
5	0 Volt	GND (connection of the shield if no "360°" connection on the connector)
3	TXD	Transmit data RS 232
2	RXD	Receive data RS 232
6	TXH	Transmit data RS422 / 485
7	TXL	Transmit data RS422 / 485
8	RXL	Receive data RS422 / 485
9	RXH	Receive data RS422 / 485

Chapter 4 - Connections

1 - CONNECTION DIAGRAMS

1.1 – RACK POWER SUPPLIES AND MOTORS CONNECTION

See manuals SMT-BM 20 A – BMM 05 F – BMM 05 AF single-axis racks and BF rack.

1.2 – AMPLIFIER COMMAND CONNECTION

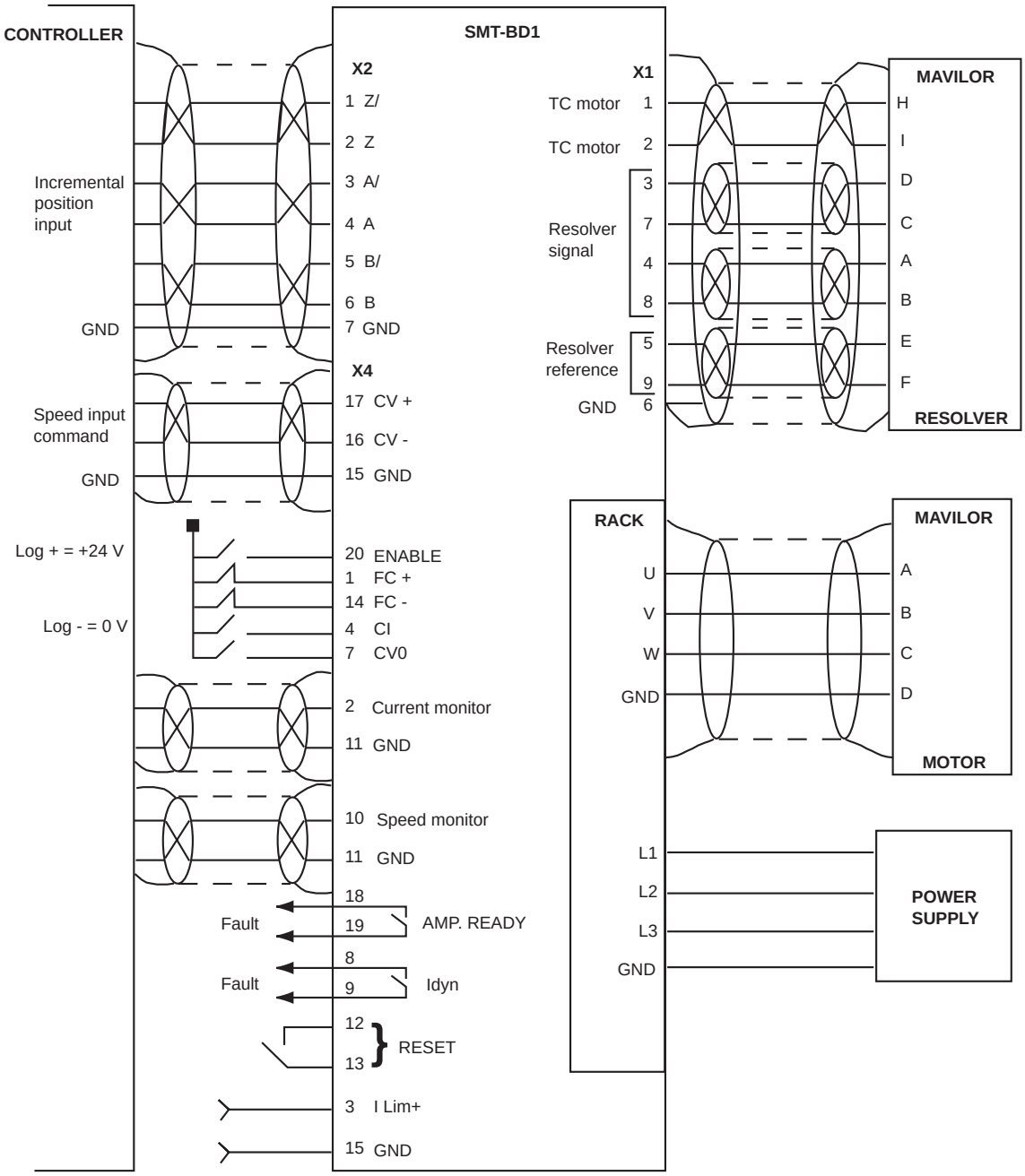

1.3 - SERIAL LINK CONNECTION

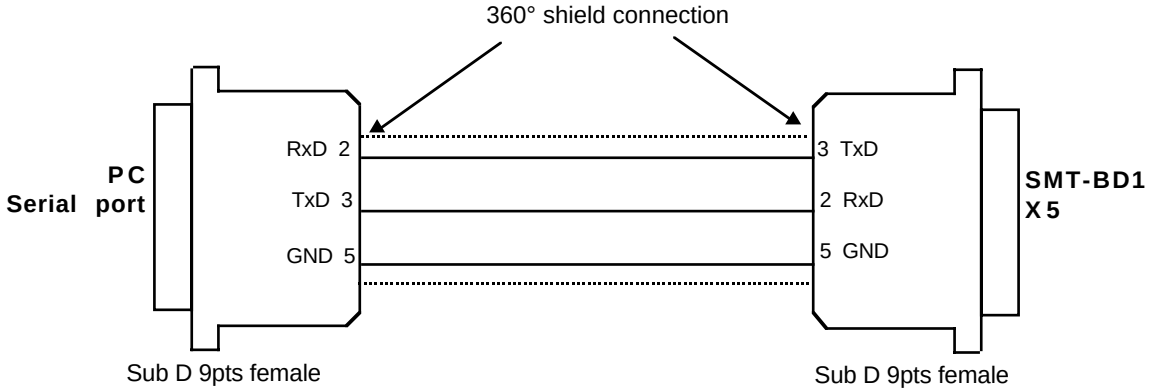

2 - WIRING

according to CEI 801 and EN 55011 standards - See enclosed drawings (chapter 6)

2.1 - GND WIRING AND GROUNDING

The reference potential is the **earth (ground)**. Motors and resolvers are grounded via their housing. If a reference of potential is existing, like a main chassis or a cabinet, with a low impedance between the different elements, it should be used with short connections and this reference potential should also be grounded.

Long reference potential connections are suitable **ONLY** if these connections have a very low impedance (< 0,1 Ω).
Cables with low potential should **NEVER** run in the proximity of power lines.
Each conductor cable (carrying a potential) must be **shielded**. Several wires in the **same sleeve** must be **twisted** and **shielded**.

According to the **CEI 801 standard**, the connectors must be metallic or metal plated and must have **a 360° shield connection** (see Chapter 8, part 6).

2.2 - MOTOR AND RESOLVER CABLES

Cable ends should have a metallic collar allowing a 360° shield connection.
Motor cables must be shielded.
The recommended resolver cable is a **three pair twisted with an individual shield on each pair** (sin, cos, ref.).

2.3 - INPUT COMMAND AND SERIAL LINK CABLES

The analog input command signal CV requires a pair twisted and shielded cable. The shield must have a "360°" connection via metallic connectors at both ends. If the shield is connected by means of a pig tail, it must be connected at one end to a 0 Volt pin of X4 on the amplifier side with a connection as short as possible.

The input command (CV) wiring must be made according to the polarity between the controller and the amplifier (CV on "diff high" of the controller). The logic 0 Volt is directly connected to the amplifier housing. The connection continuity is ensured by the fastening screws on the rack front panels. **The amplifier 0 Volt and the controller 0 Volt MUST be connected by means of a wire. The shield MUST NEVER be used as a conductor of the 0 Volt potential**.

The serial link cable must also be shielded according to the above mentioned shielding recommendations.

CAUTION !

The command cables (input command, serial link, position, resolver) as well as the power cables MUST be **connected** and **disconnected** with the amplifier TURNED OFF.

Annex I : Pressupost detallat

partida	subgrup	concepte	origen	quantitat	unitats	euros	preu unitari
material de fabricació	mòdul S.	planxa policarbonat alveolar de 8mm	Servei Estació	6,3	m2	160,59 €	25,49 €
		planxa policarbonat alveolar de 8 mm	Servei Estació	12,6	m2	321,17 €	25,49 €
		cèl·lules fotovoltàiques	Isofotón (Dept. I+D)	800	cèl·lula	5.600,00 €	7,00 €
		cinta estanyada de 2mm	Isofotón	165	m	9,90 €	0,06 €
		cinta estanyada de 6mm	Isofotón	10	m	1,00 €	0,10 €
		làmina d'EVA	Isofotón ?	30	m2	105,00 €	3,50 €
		làmina de ETFE	Isofotón ?	10	m2	100,00 €	10,00 €
		làmina de Tedlar blanc	Isofotón ?	10	m2	70,00 €	7,00 €
		poliester	gran superficie	1	L	20,00 €	20,00 €
		termoretràctil 6mm	ferreteria	1	m	1,00 €	1,00 €
		silicona	ferreteria	1	tub	5,00 €	5,00 €
	connexió S-R	terminals famella FASTON 4mm	Diotronic, S.A.	50	unitat	4,44 €	0,09 €
		cable bicolor 2x1,5mm	Diotronic, S.A.	12,5	m	13,73 €	1,10 €
		treminals famella FASTON 6mm	Diotronic, S.A.	50	unitat	5,27 €	0,11 €
	R. MPPT	plaques de circuit imprès de dues cares	Electrònica Feixas, S.L.	25	unitat	200,00 €	8,00 €
		transistors MOSFET	Electrònica Feixas, S.L.	50	unitat	150,00 €	3,00 €
		transformadors a mida	Electrònica Feixas, S.L.	50	unitat	250,00 €	5,00 €
		altres components dels reguladors MPPT	Electrònica Feixas, S.L.	25	pack	500,00 €	20,00 €
		caixa estanca Rohs ABS	Electrònica Feixas, S.L.	25	unitat	174,75 €	6,99 €
		joc de brides negres	ferreteria	0,5	paquet	1,00 €	2,00 €
	connexió R-B	cable 1,5mm vermell	ferreteria	78	m	39,00 €	0,50 €
		cable 2mm negre	ferreteria	11	m	7,70 €	0,70 €
	bateries	bateries NP7-12, de Pb-àcid, 12V i 7Ah	Yuasa	25	unitat	391,50 €	15,66 €
		cable 3mm blau	ferreteria	11,8	m	11,80 €	1,00 €
		terminals famella FASTON 4mm	Onda Radio	50	unitat	4,44 €	0,09 €
		planxa de metracrilat de 5mm	gran superficie	0,5	m2	7,50 €	15,00 €
	control	sensor d'intensitat	RS	2	unitat	37,92 €	18,96 €
		sensor de tensió	RS	1	unitat	50,29 €	50,29 €
		plaques node de desenvolupament (ECUs)	Ficosa	3	unitat	120,00 €	40,00 €
		placa node pont	Texas Inst.	1	unitat	50,00 €	50,00 €
		display amb pantalla LCD	Texas Inst.	1	unitat	20,00 €	20,00 €
		cable apantallat de 6 pols	Diotronic, S.A.	5	m	10,00 €	2,00 €
		jocs de connector de 6 canals	Diotronic, S.A.	7	unitat	3,50 €	0,50 €
	quadre general	planxa de metracrilat de 5mm	gran superficie	0,5	m2	7,50 €	15,00 €
		guia de perfil DIN	ferreteria	1	m	2,00 €	2,00 €
		magnetotèrmics bipolars de 5, 10, 30 i 40A	Merlin Gerin	4	unitat	20,00 €	5,00 €
		joc de brides transparents	ferreteria	0,5	paquet	1,00 €	2,00 €
		cable apantallat 2x0,25	Diotronic, S.A.	6	m	6,05 €	1,01 €
	auxiliars	bateries de Pb-àcid, 12V i 14Ah	Diotronic, S.A.	2	unitat	50,00 €	25,00 €
	varis	prod. Electrònics	Diotronic, S.A.	1	lot	7,76 €	7,76 €
		prod. Electrònics	Diotronic, S.A.	1	lot	22,45 €	22,45 €
		prod. Electrònics	Diotronic, S.A.	1	lot	16,33 €	16,33 €
		prod. Electrònics	Diotronic, S.A.	1	lot	11,53 €	11,53 €
		prod. Electrònics	Diotronic, S.A.	1	lot	5,95 €	5,95 €
		prod. Electrònics	Diotronic, S.A.	1	lot	3,93 €	3,93 €
		prod. Electrònics	Diotronic, S.A.	1	lot	18,21 €	18,21 €
		prod. Electrònics	Diotronic, S.A.	1	lot	9,20 €	9,20 €
		prod. Electrònics	Diotronic, S.A.	1	lot	22,69 €	22,69 €
total :						**8.651,11 €**	

recursos humans	mòdul S.	fabricar suport dels mòduls	becari	24	hora	240,00 €	10,00 €
		soldar les célules entre sí	personal qualificat	24	hora	720,00 €	30,00 €
		encapsular mòduls	personal qualificat	36	hora	1.080,00 €	30,00 €
		soldar les connexions inferiors	personal qualificat	12	hora	360,00 €	30,00 €
		retallar material sobrant de l'encapsulat	becari	60	hora	600,00 €	10,00 €
		termosellat del perímetre del mòdul	becari	12	hora	120,00 €	10,00 €
		protecció de connexions del mòdul	becari	24	hora	240,00 €	10,00 €
	connexió S-R	cablejat mòduls-reguladors	becari	12	hora	120,00 €	10,00 €
	R. MPPT	disseny del regulador MPPT	enginyer especialitzat	15	hora	900,00 €	60,00 €
		muntar reguladors	personal qualificat	48	hora	1.440,00 €	30,00 €
		instal·lar reguladors	becari	12	hora	120,00 €	10,00 €
	connexió R-B	cablejat reguladors-bateries	becari	12	hora	120,00 €	10,00 €
	bateries	connexionat de bateries	becari	6	hora	60,00 €	10,00 €
		fabricar capses de protecció de bateries	becari	10	hora	100,00 €	10,00 €
	control	muntar 3 sensors	becari	8	hora	80,00 €	10,00 €
		muntar accelerador	becari	6	hora	60,00 €	10,00 €
		disseny del bus CAN	personal qualificat	3	hora	90,00 €	30,00 €
		programar bus CAN	enginyer especialitzat	10	hora	600,00 €	60,00 €
		disseny del programa de visualització	personal qualificat	6	hora	180,00 €	30,00 €
		muntar bus CAN al vehicle	becari	12	hora	120,00 €	10,00 €
	quadre general	fabricar quadre general de control	becari	6	hora	60,00 €	10,00 €
	varis	feines varies	becari	60	hora	600,00 €	10,00 €
total :						**8.010,00 €**	

partida	subgrup	concepte	origen	quantitat	unitats	euros	preu unitari
eines, accessoris i material de manteniment	**mòdul S.**	amortització màquina d'encapsular	Isofotón	0,5	mes	31,25 €	62,50 €
	connexions	alicates de premsar terminals	Diotronic, S.A.	1	unitat	5,38 €	5,38 €
	bateries	Varivolt	Dept. eng. Elèctrica	1	unitat	100,00 €	100,00 €
		grup electrògen Honda Inverter 2kVA	Honda	1	unitat	1.800,00 €	1.800,00 €
	control	PC portàtil amb WI-FI		1	unitat	600,00 €	600,00 €
		adaptador mechero cotxe (pel PC)		1	unitat	30,00 €	30,00 €
	varis	caixa d'eines electro-mecàniques		1	caixa	400,00 €	400,00 €
		allargo 50m		1	unitat	100,00 €	100,00 €
		soldadors		2	unitat	40,00 €	20,00 €
		voltimetres de continua		2	unitat	80,00 €	40,00 €
		amperímetres de pinça		2	unitat	80,00 €	40,00 €
		'super téster'		1	unitat	200,00 €	200,00 €
total :						**3.466,63 €**	

logística	taxi aeroport	taxi	1	trajecte	29,55 €	29,55 €
	billet avió BCN-Màlaga	internet	1	trajecte	50,00 €	50,00 €
	taxi Màlaga	taxi	2	trajecte	30,00 €	15,00 €
	billet tren Màlaga-BCN	internet	1	trajecte	50,00 €	50,00 €
	desplaçament a Terrassa	cotxe propi	60	km	6,00 €	0,10 €
	desplaçament cotxe Terrassa-BCN	Sertrans	1	unitat	200,00 €	200,00 €
	desplaçament a Olesa M.	cotxe propi	80	km	8,00 €	0,10 €
	desplaçament a Olesa M.	cotxe propi	80	km	8,00 €	0,10 €
	desplaçament a Olesa M.	cotxe propi	80	km	8,00 €	0,10 €
	lloguer de local de 100m2	E.T.S.E.I.B.	7	mes	3.500,00 €	500,00 €
	enviament dels suports de policarbonat	MRW	3	paquet	45,00 €	15,00 €
	remolc a mida, P.M.A. 750kg	Taller de Barbens, S.L.	1	unitat	2.552,00 €	2.552,00 €
	toldo a mida	Sra. Tous	1	unitat	100,00 €	60,00 €
	desplaçament a Alcobendas	cotxe Ricard	1200	km	120,00 €	0,10 €
	desplaçament a Màlaga	cotxe Ricard	4400	km	440,00 €	0,10 €
total :					**7.146,55 €**	

T O T A L :	**27.274,30 €**