Escola de Camins
Escola Tècnica Superior d'Enginyeria de Camins, Canals i Ports
UPC BARCELONATECH

PROJECTE O TESINA D'ESPECIALITAT

Títol

Repair of bridges using Fiber Reinforcement Polymers (FRP)

Autor/a

Adrià Benages Curell

Tutor/a

Extern: Jamshid Mohammadi

Intern: Eva Oller Ibars

Departament

Enginyeria de la Construcció

Intensificació

Estructures

Data

Juny 2014

Resum

REPAIR OF BRIDGES USING FIBER REINFORCED POLYMERS (FRP)

Autor: Adrià Benages Curell

Tutor extern: Jamshid Mohammadi

Tutora interna: Eva Oller

Paraules clau: FRP, composite, bridge, strengthening, fibers

El nombre d'estructures que necessiten ser reforçades ha crescut de manera significativa en els últims anys, tant per la seva pèrdua de capacitat portant com per un canvi en el seu us implicant un augment les seves càrregues de servei. Habitualment les tècniques mes usades en el reforç d'aquest tipus de casos són les làmines d'acer i l'afegiment d'una capa de formigó a la ja existent. Tot i això, existeixen algunes desavantatges com la corrosió o dificultats en la manipulació i el rendiment d'aquests han provocat la recerca de nous mètodes. Així es com van aparèixer el laminat de fibres de polímers (FRP), que amb les seves qualitats pot resoldre les deficiències dels mètodes tradicionals.

L'objectiu d'aquesta tesina es presentar un estat del art de l'ús dels compostos FRP en el reforç de ponts. Primer de tot, es parla de informació bàsica del material FRP, incloent-hi definició, descripció dels seus components i propietats mecàniques que les fibres de polímers tenen com a material constructiu. Una vegada es coneix el material es presenta una revisió històrica d'estudis realitzats per altres autos. Ja en el quart capítol, es presenta l'aplicabilitat del FRP en el reforç de ponts i es discuteix quines avantatges i inconvenients té respecte els mètodes convencionals. Per últim, en el cinqué capítol es presenta un cas d'estudi d'un pont reparat amb aquest mètode a l'estat d'Alabama (Estats Units). En aquest estudi s'analitza el comportament del pont abans i després de l'aplicació del material i es comprova que tal i com era d'esperar, l'ús del FRP resol les deficiencies que aquest pont tenia inicialment. Per acabar, es realitzen unes conclusions de totes les parts del treball discutides i es presenten algunes línees de investigació que crec que necessari abordar en un futur.

Abstract

REPAIR OF BRIDGES USING FIBER REINFORCED POLYMERS (FRP)

Author: Adrià Benages Curell

Tutor extern: Jamshid Mohammadi

Tutor interna: Eva Oller

Key words: FRP, composite, bridge, strengthening, fibers

The number of structures that need to be strengthened has been increasing in the last few years, either because they have suffered a loss of bearing capacity, or because a change in their use implies increased levels of service loads. Among the most common flexural reinforcement techniques, there is the addition of concrete thickness and steel plates bonding. However, several disadvantages such as corrosion problems, difficulty in handling and performance have induced to the research for new methods. Externally bonded fiber reinforced polymer (FRP) laminates emerged in the late 80's presenting some remarkable qualities that can solve the deficiencies of traditional methods.

The purpose of this research project is to present the state of the art in the use of FRP composites in bridge strengthening. Firstly, it is told the basic information about FRP composites, including the definition, description of the components and mechanical properties that the FRP composites have as a construction material. In the third chapter of the project it is presented a historical review of studies done by other authors about the FRP composites. In the fourth chapter it is presented how FRP can be applied in the strengthening of bridges and also it is discussed the different advantages and disadvantages of the composites in comparison with traditional materials. Lastly, the fifth chapter contains a case of study of a repaired bride in the state of Alabama (USA) using the studied material. The behavior of the bridge is analyzed before and after the application of the composite with the purpose of checking which is the exact effect of the composite. In this study it is shown that as expected, the FRP solve the initial deficiencies of the bridge. Finally, a summary of the conclusions from the different parts of the research project are presented and some future lines of research are suggested.

Table of contents

Index of Figures

Index of Tables

Chapter 1: Introduction and objectives

Fiber reinforced polymer composites (FRP), developed primarily for the aerospace and different industries are a class of materials with great potential to use in civil infrastructure [1]. Since the construction of the first all-composite bridge superstructure in Miyun, China, in 1982, they have been gradually gaining acceptance from civil engineers as a new construction material. During these 30 years, their proved to be useful in a few areas of application: mostly in form of sheets and strips for strengthening existing bridge structures, and to some extent, as reinforcing bars substituting steel as concrete reinforcement [2].

Also, a number of constructions in which FRP composites replaced traditional materials have been build for structural elements such as girders, bridge decks and stay cables[3]. Among these constructions there is a relatively big amount of hybrid bridge structures, where only a part of the superstructure is made of FRP composites[4], and a much smaller amount of all-composite bridge structures, with superstructures made exclusively of this material [5].

One of the primary factors which have led to the current unsatisfactory state of our infrastructure is corrosion of reinforcement to expand, and results in delaminating or spalling of concrete, loss of tensile reinforcement, or in some cases failure. Because infrastructure owners can no longer afford to upgrade and replace existing structures using the same materials and methodologies as have been used in the past, they are looking to newer technologies, such as non-corrosive FRP reinforcement, that will increase the service lives of concrete structures and reduce maintenance costs. FRPs have, in the last ten to twenty years, emerged as a promising alternative material for reinforcement of concrete and strengthening of structures.

Is this increasing number of structures with the presence of fiber reinforcement polymers the main motivation that we have to learn more about which are the exact benefits of this material, and which can be its future in the field of civil engineering and more exactly in the strengthening of bridges.

The objective of this thesis is to make a fiber reinforced polymer (FRP) historical review, to make an overview of their properties and overweight the advantages and disadvantages that the use of FRP have in front of other materials. Also we would like to check that as talked in this thesis, FRP is an effective way in the strengthening of bridges. It is in this direction that an analysis of a case of study will be deeply analyzed.

Chapter2: State of art

2.1 FRP material

2.1.1 Introduction to the material. Definition.

Composite materials have been used in civil engineering for centuries. Indeed, one of the first was the use of straw as reinforcement in mud and clay bricks by the ancient Egyptians.

Composite is defined as a mechanically separable combination of two or more components, molecularly different, mixed with the idea to obtain a new material with optimal properties, different than the properties of the components by themselves[3][6].

Fiber Reinforced Polymer (FRP) composites are the combination of polymeric resins, acting as matrix, with strong and stiff fiber assemblies which acts as the reinforcing phase [3]. The combination of the matrix phase with a reinforcing phase produces a new material system, analogous to steel reinforced concrete, although the reinforcing fractions vary considerably (i.e., reinforced concrete in general rarely contains more than 5% reinforcement, on the other hand in FRP composites, reinforcing volume fraction ranges from 30-70%) [7].

Fibre Reinforced Polymer composites is gradually gaining acceptance from civil engineers, both for the rehabilitation of existing structures and for the construction of new facilities, even FRP was primarily developed for the aerospace and defense structures. This acceptance is trying to change the tendency of the last century, in which the combination of reinforcing steel and concrete has been the basis for a number of structural systems used in construction.

2.1.2 Components of the material

FRP is made of fibers and matrix. Each of these phases has to perform its required function based on mechanical properties, so that the composite system performs as expected. Those phases and its properties are presented below.

2.1.2.1 Fibers

A fiber is a material which consists of a long filament with a radius between 5 and 7.5µm. The length of these fibers can be ranged from thousand to infinity in the continuous ones.

The main functions of the fibers are to carry the load and to provide stiffness, strength, thermal stability and other structural properties in the FRP [3].

In order to achieve these functions, the FRP composites must have the following proprieties [8]:

- High modulus of elasticity;
- High ultimate strength;
- Low variation of strength among fibers;
- High stability of their strength during handling;
- High uniformity of diameter and surface dimensions among their fibers.

Depending on their properties, there are three different types of fiber dominating the civil engineering industry: glass, carbon and aramid fibers, each of which has its own advantages and disadvantages. The properties of each type of fiber will be shown in Table 1 later on.

Glass fibers

Glass fibers are formed when thin strands of silica-based or other formulation glass are extruded into many fibers with small diameters suitable for textile processing.

There are five forms of glass fibers used as the reinforcement of the matrix material: chopped fibers, chopped strands, chopped strand mats, woven fabrics, and surface

tissue. The glass fiber strands and woven fabrics are the forms most commonly used in civil engineering application. Relatively low cost comparing to other kinds of fibers makes E-glass (alumino-borosilicate glass with less than 1% w/w alkali oxides, mainly used for glass-reinforced plastics) fibers the most commonly used fibers available in the civil engineering industry. Even that, other times A-glass (alkali-lime glass with little or no boron oxide), E-CR-glass (alumino-lime silicate with less than 1% w/w alkali oxides, has high acid resistance), C-glass (alkali-lime glass with high boron oxide content, used for example for glass staple fibers), D-glass (borosilicate glass with low dielectric constant), R-glass (alumino silicate glass without MgO and CaO with high mechanical requirements), and S-glass (alumino silicate glass without CaO but with high MgO content with high tensile strength) [9].

Glass-reinforced plastic (GRP) is a composite material made of a plastic reinforced by fine glass fibers. Like graphite-reinforced plastic, the composite material is commonly referred to as fiberglass. The glass can be in the form of a chopped strand mat (CSM) or a woven fabric [10].

The disadvantages of glass fibers are a relatively low Young´s modulus, the low humidity and alkaline resistance as well as low long-term strength due to stress rupture. For applications involving concrete a more alkaline resistant so-called AR fiber has been developed with increased zircon oxide cont. [3]

Fig. 1: Example of Glass fiber [11]

Carbon fibers

Carbon fibers, or CF, consist of fibers about 5–10 µm in diameter and composed mostly of carbon atoms. To produce carbon fiber, the carbon atoms are bonded together in crystals that are more or less aligned parallel to the long axis of the fiber as the crystal alignment gives the fiber high strength-to-volume ratio (making it strong for its size). Several thousand carbon fibers are bundled together to form a tow, which may be used by itself or woven into a fabric [12].

The properties of carbon fibers, such as high stiffness, high tensile strength, low weight, high chemical resistance, high temperature tolerance and low thermal expansion, make them very popular in aerospace, civil engineering, military, and motorsports, along with other competition sports. However, they are relatively expensive when compared to similar fibers, such as glass fibers or plastic fibers [13].

Carbon fibers are usually combined with other materials to form a composite. When combined with a plastic resin and wound or molded it forms carbon fiber reinforced polymer (often referred to as carbon fiber) which has a very high strength-to-weight ratio, and is extremely rigid although somewhat brittle. However, carbon fibers are also composed with other materials, such as with graphite to form carbon-carbon composites, which have a very high heat tolerance.

Compared to the other fibers, carbon fibers have high elastic modulus and fatigue strength than those of glass fibers. Considering service life, studies suggests that carbon fiber reinforced polymers have more potential than aramid and glass fibers [14]. Their disadvantages include inherent anisotropy (reduced radial strength), comparatively high energy requirements in their production as well as relatively high costs [3][23].

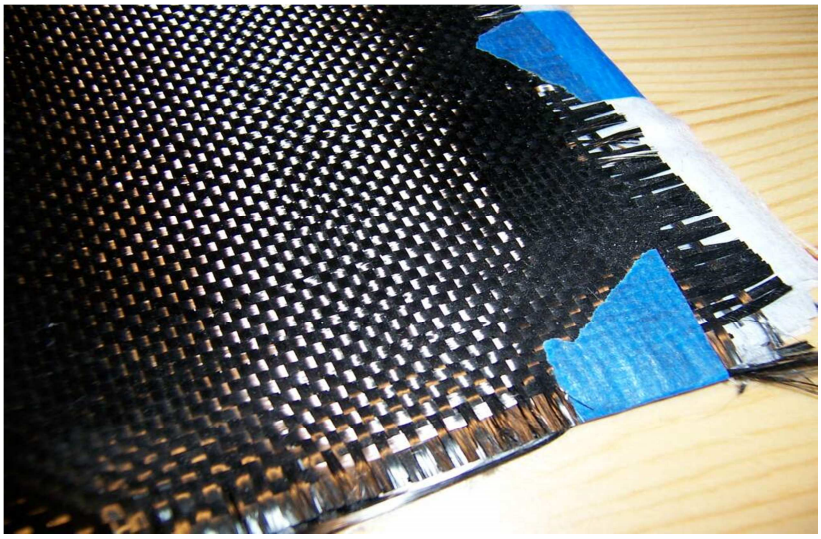

Fig. 2: Example of Carbon fiber [15]

Aramid fibers

Aramid or aromatic polyamide fiber is done by extruding a solution of aromatic polyamide at temperatures between -59ºC and 80ºC into a hot cylinder at 200ºC [16]. It is one of the two most used fibers in civil engineering application.

Aramids share a high degree of orientation with other fibers such as ultra high molecular weight polyethylene, a characteristic that dominates their properties. In general aramid fibers are a good resistance to abrasion, a good resistance to organic solvents; it is a nonconductive material and sensitive to acids and salts [17].

All these properties makes aramid fibers possess higher strength and toughness among reinforcing fibers as well as a high static, dynamic fatigue and impact strength. The disadvantages are a low compressive strength (500-1000 MPa), reduced long-term strength (stress rupture) as well as sensitivity to UV radiation. Another drawback of aramid fibers is that they are difficult for cutting and machining [3].

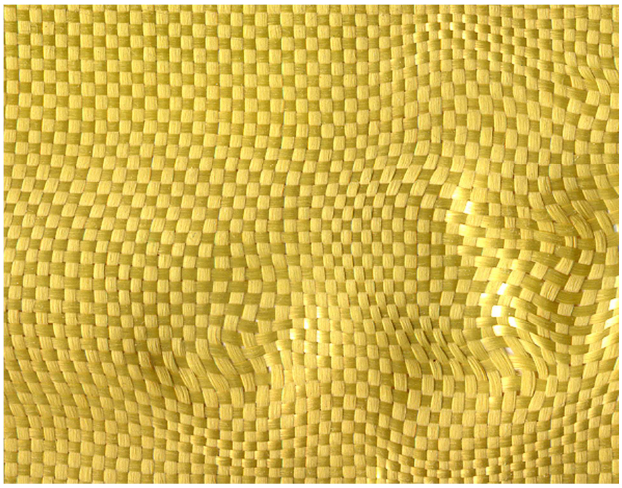

Fig. 3: Example of aramid fibers [18]

Fibers properties

There is a summary of the principal properties of some of the most representative types of fibers of the three different groups exposed before. This summary is represented in the table above.

		Density ρ [g/cm3]	Modulus of Elasticity E [GPa]	Tensile Strength Rm [MPa]	Extension %
Glass	**E-glass**	2.6	72	1.72	2.4
	S-glass	2.5	87	2.53	2.9
Carbon	**High Strength**	1.8	230	2.48	11
	High modulus	1.9	370	1.79	0.5
Aramid	**Kevlar 29**	1.44	100	2.27	2.8
	Kevlar 49	1.44	125	2.27	1.8

Table 1: Mechanical properties of different fibers [8]

2.1.2.2 Matrix

The matrix of the composite is a polymer composed of molecules made from many small and simple units called monomers. This matrix has a much lower modulus and a greater elongation than those of fibers with the objective to makes the fibers carry the maximum load.

The most important functions of matrix materials in FRP composites are [3]:

- Provide protection to the fibers against chemical and mechanical damages.
- Maintain the fibers together and fixing them in the desired geometrical arrangement.
- Provide final color and surface finish for connections.
- Transferring the load to the fibers by adhesion and/or friction.
- Provide rigidity and shape to the structural member.
- Isolate the fibers so that they can act separately, resulting in slow or no crack propagation.
- Influence performance characteristics such as ductility, impact strength.

Type of matrix material and its compatibility with the fibers also significantly affect the failure mode of the structure. There are various types of matrix materials, which can be used in civil engineering construction. Categorized by manufacturing method and properties, two major types of polymers are thermoplastic and thermosetting polymers.

Thermoplastic polymers

Thermoplastic polymers are ductile in nature and tougher than thermoset polymers. However, they have lower stiffness and strength. They can be reformed and reshaped by simply heating and cooling. Since the molecules do not cross-link, thermoplastics are flexible and deformable. They have poor creep resistance at high temperature and more susceptible to solvent than thermosets. Commonly used thermoplastics are nylon, polyetheretherketine (PEEK), polypropylene (PP), and polyphenylene sulfide (PPS) [3].

Thermosetting polymers

Thermosetting polymers are usually made from liquid or semi-solid precursors which harden irreversibly; this chemical reaction is known as cure and on completion, the liquid resin is converted to a hard solid by chemical cross-linking which produces a tightly three-dimensional network of polymer chains. This family of polymers has an important virtue when used as matrices in FRP, which is the low viscosity of the

precursor liquids, prior to cross linking, that facilitates wetting of reinforcement fibers. The main polymers used in construction under this heading are [19]:

-Unsaturated polyesters: Currently are the most widely used polymers in construction, as matrix of FRP. They are relatively low cost materials and are easy to process at an ambient temperature of cure. They can be formulated in hundreds of different ways to tailor their properties to different manufacturing process and can easily be filled and pigmented.

-Epoxies: In general epoxies have high specific strength and dimensional stability. They are particularly known by their adhesion ability to many substrates, and low shrinkage during the cure. A wide variety of formulations are available giving a broad spectrum of properties. They can be processed at both room and elevated temperatures. Epoxies have excellent environmental and chemical resistance, when compared with unsaturated polyester.

-Vinylesters: These polymers have similar mechanical and in-service properties to those of the epoxy resins and equivalent processing techniques to those of the unsaturated polyesters. Generally they have good wetting characteristics and possess resistance to strong acids and strong alkalis conditions. They can, also, be processed at both room and elevated temperatures.

-Phenolics: The most important characteristic of this family of polymers is there good flame retardant properties, low smoke generation and high heat resistance. For this reason, they are used when fire resistance is a requirement.

Notice that all types of resins are sensitive to UV radiation. Therefore, they require an appropriate protection by means of special additives and/or surface fleeces [3] [19].

A table with the main properties of the typical unfilled matrix materials used is presented in Table 2.

Resin Material	Density (g/cm3)	Tensile modulus Gpa (10^6psi)	Tensile Strength Mpa (10^3 psi)
Expoxy	1.2-1.4	2.5-5.0 (0.36-0.72)	50-110 (7.2-16)
Phenolic	1.2-1.4	2.7-4.1 (0.4-0.6_	35-60 (5-9)
Polyester	1.1-1.4	1.6-4.1 (0.23-0.6)	35-95 (5.0-13.8)
Nylon	1.1	1.3-3.5 (0.2-0.5)	55-90 (8-13)
PEEK	1.3-1.35	3.5-4.4 (0.5-0.6)	100 (14.5)
PPS	1.3-1.4	3.4 (0.49)	80 (11.6)
Polycarbonate	1.2	2.1-3.5 (0.3-0.5)	55-70 (8-10)
Acetal	1.4	3.5 (0.5)	70 (10)
Polyethylene	0.9-1.0	0.7-1.4 (0.1-0.2)	20-35 (2.9-5)
Teflon	2.1-2.3	-	10-35 (1.5-5.0)

Table 2: Main properties of the trypical unfilled matrix

2.2Mechanical properties [20]

Basically, the properties of FRP reinforced composites depend on the properties of its components, on the volume of fibers and matrix and on their geometrical disposition. The fibers give the strength to the material. This strength depends on the volume fraction and on the orientation of the fibers.

All composite materials have certain common properties which are the result of their composite nature and the presence of reinforcement. These properties are:

- Anisotropy (depending on the type of reinforcement)
- Low density
- High resistance to corrosion and oxidation
- Relatively high mechanical properties
- Ability to form complex shapes.

The most important properties to be determined in a composite are:

- Density
- Modulus of elasticity
- Poisson's coefficient
- Tensile strength
- Effect of fiber's orientation

The properties of FRP composites may be improved by combining two or more different types of fibres in the same array. An example is a hybrid material made of glass and carbon fibres, which has a high tensile strength, high resistance to impact (a quality that CFRP does not have when not combined with glass fibres), and can be produced at low cost.

In the following sections the principal properties discussed above are presented in more detail.

2.2.1 Density [20]

The density of composites plays a major role in setting work and in the transfer of loads of structural elements designed with this kind of material. In consequence of this condition, one of the advantages of FRP composite is its low density, which brings other advantages such as: ease of handling and assembly, ease of transportation of material to construction site, and reducing loads to the elements which are supported. As a result, there is a cost reduction in the above concepts.

Generally, the density of the composites for various fiber types varies between 0,9 and 2,3 g/cm3, although in most cases it is between 1,2 and 1,8 g/cm3. The low density of FRP composites (compared to metals, which in steel is three to four times higher) gives them high levels of specific stiffness and specific strength. To determine the density of material composed from fibers and resin of known properties, a simple rule is applied, basing on the volume fraction of each of the components:

$$\rho_c = \rho_m \cdot V_m + \rho_f \cdot V_f$$

Where,

ρ_c is the density of the composite.

ρ_m is the density of the matrix.

V_m is the volume of the matrix.

ρ_f is the density of the fibers.

V_f is the volume of the fibers.

2.2.2 Poisson's ratio [20]

Poisson's ratio υ of a composite material could vary considerably depending on the orientation of the fibres. When the angle between the direction of the fibres and the direction of the load is 0°, Poisson´s ratio usually has the values similar to metals, in the range of 0,25 to 0,35. For different orientation of fibres, Poisson´s ratio can vary considerably, reaching 0,02 to 0,05 when this angle is 90°. This is because the most rigid fibers resist the resin's contraction. Otherwise, when the fibers are orientated with an angle between 30 and 40 degrees, υ could reach values of 0,65.

Regardless of these values, the Poisson's ratio of a composite could be calculated applying the same criteria used to obtain the deformation modulus, using the expression

$$\upsilon = \upsilon_f \cdot V_f + \upsilon_m \cdot V_m$$

Where,

υ is the Poisson's ratio of the composite

$\upsilon_f$is the Poisson's ratio of the fibers

V_m is the volume of the matrix.

$\upsilon_m$is the Poisson's ratio of the matrix

V_f is the volume of the fibers.

The value of υ could differ depending on the material used in the fabrication of the composite and depending of the orientation of the fibers since the fibers try to align by themselves once the load is applied.

The figure below shows how Poisson's ratio varies with the angle of inclination of the fibers.

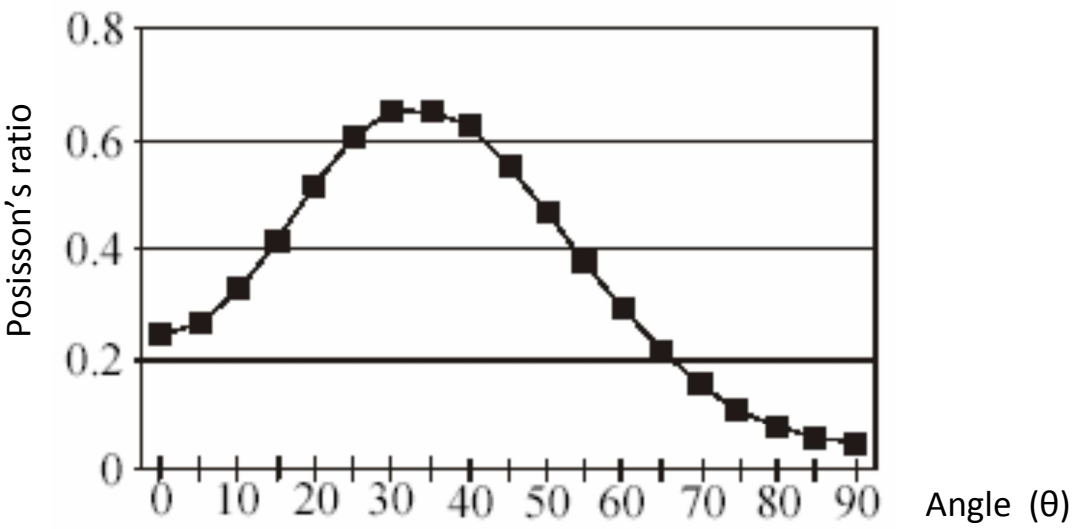

Fig. 4: Poisson's ratio vs angle of inclination of the fibers [20]

2.2.3 Modulus of elasticity [20]

The modulus value depends on the type of fibers reinforcing the composite material and their orientation.

Table 3 presents examples of three types of composite materials and the variation of longitudinal modulus, transverse modulus, shear modulus and Poisson's ratio for unidirectional reinforced FRP composites. In this kind of composites, fibers are straight and parallel.

Laminate	E(longitudinal) (GPA)	E(transverse) (GPA)	G (GPA)	v
Carbon/Epoxy	181	10.3	7.17	0.30
Glass/Polyester	54.1	14.05	5.44	0.25
Aramid/Epoxy	75.86	5.45	2.28	0.34

Table 3: Typical values of the modulus for unidirectional FRP composites [20]

As we can see in the table above, composite material formed by carbon fibers and epoxy resin are those with the highest stiffness. On the other hand, material composed of glass fibers and polyester resin has a higher Young's modulus in the direction transverse to the fibers, making them more useful for elements subjected to loads in

both directions. Finally, composites based on aramid fibers are only efficient in the direction of fibers.

The volume fraction of fibres has a significant effect on the values of modulus of the final composite, both longitudinal and transverse. For unidirectionally reinforced polymers, the longitudinal and transverse modules can be estimated with the following expresions:

$$E_L = E_f \cdot V_f + E_m \cdot V_m$$

$$E_T = \frac{E_f \cdot E_m}{E_f \cdot V_f + E_f \cdot V_f}$$

Where,

E_L is the longitudinal modulus of deformation of the composite in the fibers direction.

E_m is the modulus of deformation of the matrix.

V_m is the volume of the matrix.

E_f is the modulus of deformation of the matrix.

V_f is the volume of the fibers.

E_T is the transversal modulus of deformation of the composite (perpendicular at the fibers direction)

As a result of the application of these equations it is observed that the longitudinal modulus of deformation of a composite is larger than their transversal modulus of deformation. This is because the resistance of the laminate is always greater when their direction is pararlel to the fibers. On the other hand, when the laminate is located transversal to the fibers the resistence of the composite is carryed by the matrix.

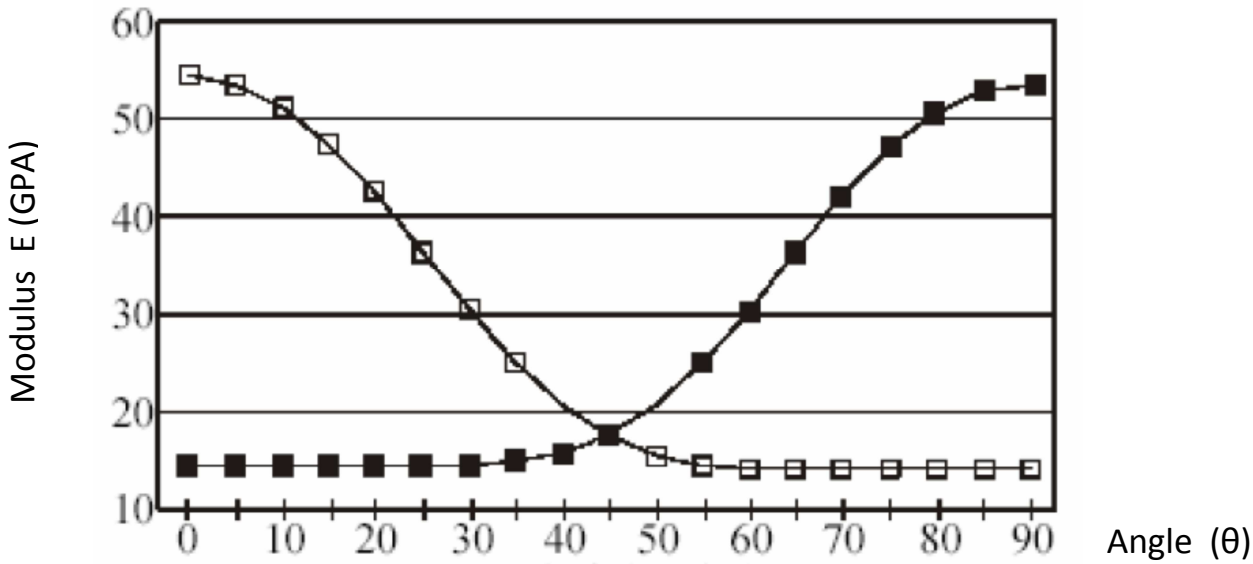

Fig. 5: Longitudinal and transverse modulus as a function of angle of inclination of the fibers [20]

The modulus of elasticity of the FRP composite also depends on the orientation of fibers. The figure above shows how longitudinal and transverse modules vary with the angle of inclination of the fibers. The longitudinal modulus reaches its maximum when the angle of inclination of the fibers equals to 0° (i.e. in unidirectionally reinforced composites), while the transverse modulus reaches its maximum value when the angle of inclination of the fibres equals to 90°.

For irregular orientation of reinforcement the estimation of Young´s modulus is much more complicated and depends not only on the angles between the fibers, but also their diameters and lengths.

2.2.4 Tensile strength [20]

The tensile strength of this materials is one of their most important properties, specially for their engineering uses. Later on it will be told how the FRP composites have a great tension behavior, making them very useful in some geotechnical applications as ground anchor.

Table 4 shows the tipical values of tensile strength in the longitudinal and transversal direction of the fibers, of different uniderectional composites, being the longitudinal strength the one paralel to the fibers and transversal the one perpendicular to the

fibers. In this kind of material the longitudinal strength is between 30 and 40 times greater than the transversal strength. This is due to the probability of failure without cracking the fibers in the transversal direction of the composite. The tensile strength in the longitudinal direction is determined by the strength apported by the resin, whom could be obtained approximately with the following expression:

$$T_S = T_{Sf} \cdot V_f + T_{Sm} \cdot V_m$$

where,

T_S is the ultimate tensile strength of the composite

T_{Sf} is the ultimate tensile strength of the fibers

V_m is the volume of the matrix.

T_{Sm} is the ultimate tensile strength of the matrix

V_f is the volume of the fibers.

Material	Longitudinal strength		Transversal strentgh		
	Tension (Mpa)	Compresion (Mpa)	Tension (Mpa)	Compresion (Mpa)	Shear (Mpa)
Carbon/Epoxy	1448	600	52	206	93
Glass/Vinil	610	215	49	49	16
Aramid/Epoxy	1400	235	12	53	34

Table 4: Tension and compression Strength of unidirectional laminates [20]

As shown in Table 4, the composite with the highest tensile strength (longitudinal and transversal) is the one with carbon fiber and epoxy resins. As it was told before, it can be seen that the transversal tensile strength are much more lowers than the tensile strength in the longitudinal direction. Also could be seen that in the three studied cases the compresion strength is ecual or greater than the tensile strength.

2.2.5 Effect of the fibers orientation [20]

As commented in other properties, the orientation of the fibers plays an important roll in the principal properties of the composite materials. In order to ilustrate the effect of the fibers orientation, in the table 5 presents the strentg calculated for different

composites with different fibers orientation. To define each orientation, the following notation is used $[\theta_n/\theta_n/..]_s$, where $\theta_i$is the angel of the fibers orientation, n is the number of layers in each orientation and s indicates that the layers are repited symetricaly. For example, a composite with 16 layersthat have a half of the layers with a longitudinal direction and the other half in the transversal direction can be represented as:

$$[\theta_4/\theta_8/\theta_4]$$

FRP type and orientation	Dorection 0		Direction 90		Deformation in failure in direction 0
	Elastic Modulus (Gpa)	Failure tension (Gpa)	Elastic Modulus (Gpa)	Failure tension (Gpa)	
High resistance carbon/epoxy					
$[0_4]$	100-140	1020-2080	2.1-7	35-70	1.0-1.5
$[0_1\text{-}90_1]_s$	55-76	100-1030	55-75	700-1020	1.0-1.5
$[45_1/45_1]_s$	14-28	180-280	14-28	180-280	1.5-2.5
Glass E/Epoxy					
$[0_4]$	20-40	520-1400	2.1-7	35-70	1.5-3.0
$[0_1\text{-}90_1]_s$	14-34	520-1020	14-35	520-1020	2.0-3.0
$[45_1/45_1]_s$	14-21	180-280	14-20	180-280	2.5-3.5
High resistance aramid/Epoxy					
$[0_4]$	100-140	700-1720	2.1-7	35-70	2.0-3.0
$[0_1\text{-}90_1]_s$	55-76	280-550	28-35	280-550	2.0-3.0
$[45_1/45_1]_s$	14-28	140-210	7.1-14	140-210	2.0-3.0

Table 5: Influence of fiber's orientation in laminate's behavior [20]

From the table above it can be seen the increment in the strength of the laminate with fibers orientated +45° and -45° compared with those that have only fibers orientated +45°. This is because the composite that have only fibers orientated +45° could fail in the direction of the fibers without rupture of any single fiber. On the other hand, when both orientations are used, the rupture of some fibers can occur without reaching the failure of the whole composite.

Traditionally, the designers have been using dispositions with the same number of layers in 0°, 45°, -45° and 90°, obtaining a composite that have 1.5 times the strength of a the layer orientated at 0°. Otherwise, these configurations have lower strength than the unidirectional composites. It have to be observed that the resistence in the

longitudinal axis increase when the layers orientated at 0° increases, even that it is not proportionaly.

2.2.6 Stress-strain relationship [3] [20]

Below is presented a simplified stress-strain $\sigma(\epsilon)$ relationship for unidirectionally reinforced composite polymer and its components separately, during tensile testing in the direction of the fibres. It is assumed that the maximum deformation of the matrix is much larger than the maximum deformation of fibre. With this assumption, the function $\sigma(\epsilon)$ is close to linear in the range of (0;$\varepsilon_{max,f}$) for both: the fibres, the matrix and the composite.

Composite is a brittle material and doesn´t yield plastically, thus the ultimate strength and breaking strength are the same. The destruction of the composite occurs for values of stress as a result of the maximum strain ($\varepsilon_{max,f} = \varepsilon_{max,c}$) of the fibres.

Assuming an ideal bond between fibre and matrix, we can estimate that

$$\sigma_c = \sigma_f \cdot \upsilon_{\mathrm{f}} + \sigma_m \cdot \upsilon_{\mathrm{m}}$$

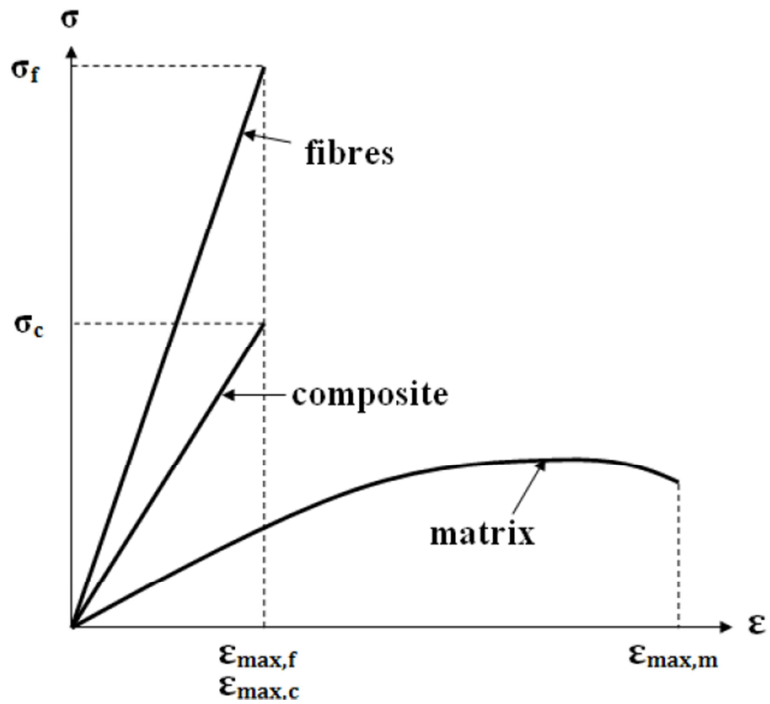

Fig. 6: Stress-strain relationship for FRP composite and its components [3]

However, non-linearity can also be observed due to formulation of small crack in resin; fibre buckling in compression; fibre debonding; viscoelastic deformation of matrix, fibres, or both. The axial tensile and compressive strengths are dominated by fibre properties because they carry most of the axial load.

Their stiffness is higher than that of matrix. The other strength values, which are often lumped into transverse strength properties, are influenced primarily by matrix strength characteristics, fibre-matrix interfacial bond strength, and the internal stress concentration due to voids and proximity of fibres. When fibre breaks under tensile load, the matrix resists the displacement by shear stress on lateral surface of the fibres. In compression, matrix helps stabilize the fibres, preventing them from compressive buckling at low stress level

Chapter 3: Historical Review

This chapter presents a historical overview of the existing experimental research on strengthening concrete structures (in bending and/or shear) by bonding external plates done by other authors.

Even the first studies on externally bonded steel plates were done at the late sixties of the last century, it is not until 1982 when EMPA (Swiss Federal Laboratories for Materials Testing and Research) introduce the idea of substitution of steel plates with FRP [21]. Some years later and after a small number of tests, Meier presented the feasibility of this externally bonded composite laminates for strengthening concrete structures assuming a cost reduction of 25% when substituting steel plates by composite laminates [22]. This first experience showed to the world the potential use of those materials in civil engineering and more specifically the future of those composites in strengthening of reinforced or prestressed concrete structures.

Those studies also served as the basis of subsequent tests done by other authors in this field. Some of those tests and studies helped to understand the properties and applications of FRP in the beginnings and its conclusions are summarised below:

- P. A. Ritchie[23] in 1988 upgraded fourteen reinforced concrete beams using steel plates as well as, glass and carbon FRP laminates. He reported increases in beam stiffness ranged from 18 to 116 percent, and the increases in the ultimate flexural capacity changed from 47 to 97 percent. The beams with externally bonded plates also exhibited another desirable trait, namely, the cracking patterns changed from several widely spaced cracks with relatively large widths, to many more closely spaced cracks with much narrower widths. Analytically predicted load-deflection responses exhibited fairly good correlation with the experimental data, although the theoretical curves were stiffer. The author indicated that failure did not occur by flexure in the maximum moment region on many beams, but rather by debonding at the plate ends, despite attempts at providing plate end anchorages to postpone interface failure. Based on the experimental evidence, externally bonded FRP plates proved to be a feasible method of upgrading the strength and stiffness

characteristics of reinforced concrete beams. Additional studies to investigate stress concentrations near the plate ends to prevent premature failure were also recommended.

- H. Saadatmanesh and M. R. Ehsani[24] in 1990 tested five reinforced concrete beams, four of them strengthened with epoxy bonded GFRP plates, and the fifth served as a control specimen. The four strengthened beams had the same steel reinforcement ratio and GFRP plate area, however, a different epoxy was used on each beam. The selected epoxies had a wide range of strengths and ductility. The most ductile epoxy did not enhance the ultimate capacity of the beam because it was too flexible to allow any shear transfer between the concrete and the GFRP plate. On the other hand, the most rigid adhesive experienced a premature failure of the beam with no increase in the peak load compared to that of the control beam. The remaining two epoxies used in the study did increase the ultimate flexural capacity of the beams by 30 and 110 percent, respectively. It was concluded that an effective adhesive must have both sufficient stiffness and shear strength to successfully transfer the load from the concrete to the GFRP plates.

- In 1991 U. Meier and H. Kaiser[25] tested twenty-six rectangular reinforced concrete beams having a 2 meter span, and one beam having a span of 7 meters. The 2 meter span beams were strengthened with 0.3 mm thick CFRP sheets bonded to the beam bottoms. Strengthening with this very thin plate nearly doubled the ultimate flexural capacity of the beams. However, the steel reinforcement in the beams was intentionally under dimensioned. In the case of the seven meter span beam which was reinforced with a 1.0 mm thick CFRP laminate, the reported increase in ultimate flexural capacity was only 22 percent, and a sudden laminate peel-off due to the development of shear cracks in the concrete was also noticed. The influence of bonded CFRP laminates on reducing the number and width of flexural cracks was also studied. Despite the higher ultimate flexural capacity exhibited by the CFRP

retrofitted beam, the total width of all cracks was 40 percent less than that experienced by the control beam. Finally, it was concluded that the ultimate flexural capacity of reinforced concrete beams strengthened with FRP plates could be calculated analytically by a procedure completely analogous to that employed for conventionally reinforced concrete beams.

- Also in 1991, H. Saadatmanesh and M. R. Ehsani[26] tested five rectangular concrete beams and one Tbeam, strengthened with GFRP plates, under four points loading. The results of the rectangular beam tests indicated that the ultimate flexural strength of reinforced concrete beams can be significantly increased by gluing GFRP plates to the tension face. However, beams having no conventional steel reinforcement failed at a very low load due to premature debonding of the FRP plate. Thus, it was concluded that a minimum amount of steel reinforcement was necessary to limit the width of the flexural cracks to prevent debonding of the composite. Results of the T-beam test indicated that bonding of the GFRP plate doubled the flexural capacity of the beam.

- W. An and some contributors[27] developed analytical models based on compatibility of deformations and equilibrium of forces for predicting the load-deflection response for reinforced concrete beams strengthened with FRP plates in 1992. Models were derived for both rectangular and T-sections. Using these models, a parametric study was conducted to investigate the effects of several design variables such as FRP plate area, plate modulus, plate tensile strength, concrete compressive strength and steel reinforcement ratio. It was concluded from the results of the study that bonding the FRP plate to the concrete beam increases the stiffness, the yield moment and the ultimate flexural capacity of the beam, particularly for beams having low steel reinforcement ratios. Increasing the concrete compressive strength for beams strengthened with FRP plates resulted in a further increase in the ultimate flexural strength of the section. Although the calculated curvature at the

ultimate load decreased as the FRP plate area increased, the area under the moment curvature diagram did not decrease significantly.

- Still at 1992, U. Meier et al.[28] extended the concept of strengthening laboratory test beams to girders in existing bridge structures. The Ibach Bridge and the historic wooden bridge in Switzerland were strengthened by external bonding of CFRP plates and was the first application in a real case. The damaged concrete girder in the Ibach Bridge, having a span of 39 meters, was repaired with CFRP laminates. A 6.2 kg CFRP plate was used in the repair in lieu of a 175 kg steel plate. In the second case, the historic wooden bridge was severely deteriorated and a load limit was posted. Two of the most highly loaded cross beams were strengthened using carbon fiber reinforced epoxy resin sheets. Even though the strengthened beams were subjected to extremely high loads, no further signs of deterioration were reported.

- In 1994, M. J. Chajes et al.[29] performed a series of laboratory tests on reinforced concrete beams with bonded composite fabrics to evaluate the improvement of the ultimate flexural capacity. The fabrics used were made of aramid, E-glass and graphite fibers. Originally, all beams were bonded for flexural considerations without shear strengthening. End tabs were later employed to prevent fabric debonding which occurred in the first series of tests. Beams strengthened with aramid failed due to concrete crushing, while those strengthened with E-glass and graphite fibers failed due to rupture of the composite. These different modes of failure were attributed to the variation in the fabric ultimate strain. The ultimate strain for the aramid fabric was twice that of E-glass and three times that of the graphite. Increases in the ultimate flexural capacity ranged from 36 to 57 percent with corresponding increases in flexural stiffness of 45 to 53 percent. This increase in strength was accompanied by a decrease in ductility. The reported ductility index for beams strengthened with composite was in the vicinity of two or three, while beams

without the composite fabric exhibited a ductility index in the range of four to five.

- In the same year 1994, P. J. Heffernan[30] conducted a series of laboratory tests to investigate the fatigue behavior of damaged beams post-strengthened with CFRP laminates. The results of seven (3 static plus 4 cyclic) 2.0 m span simple beams and four (2 static plus 2 cyclic) 5.0 m simple span beams were reported. The efficiency of the CFRP reinforcement as compared to an equivalent area of additional conventional steel reinforcing was greater than the modular ratio of the materials, and was dependent upon the relative distance of the additional reinforcements from the neutral axis. For beams subject to static loading, a design procedure based on strain compatibility was found to be reliable. The fatigue life of beams subjected to cyclic loading with a stress range greater than the tensile strength of the reinforcing steel, was governed by the reinforcing steel. Unlike the monotonic loading cases, the 2.0 m beams in the fatigue tests experienced shear cracks after 100,000 cycles. These cracks propagated horizontally, at the reinforcing steel level, toward midspan and eventually precipitated failure of the beam. The author attributed this type of failure to insufficient development length for the CFRP plate. The mode of failure for both monotonic and cyclic loading of the 5.0 m beams was a sudden rupture of the CFRP plate near midspan. The fatigue life of the CFRP strengthened beams appears to be at least equal to that of the conventionally reinforced concrete beam of the same strength. No slippage between the CFRP and the concrete beam as result of cyclic loading was observed. Finally, the effect of beam scale was examined and appeared to be negligible.

- Also in 1994, N. Plevris and T. Triantafillou[31] studied the time dependent behavior (due to sustained loading) of reinforced concrete beams strengthened with FRP laminates. An analytical procedure was presented for the deformation of the cross section based on an age-adjusted effective modulus method for the concrete. The analytical model was used to predict the long term

deflections of reinforced concrete beams with bonded FRP plates. The authors concluded that bonding the FRP plates to the concrete beams played a favorable role in mitigating the long term deflection response. Increasing the FRP plate area decreased the creep strains.

- At 1994, R. Qu[32] performed analytical studies on reinforced concrete beams strengthened with CFRP laminates using the finite element method (FEM). A reasonably accurate load-deflection response was predicted based on the proposed modeling of the material stress-strain relations, failure criterion and concrete properties. The confinement effect of the CFRP plates was implemented by setting the concrete modulus of elasticity after cracking (E,) to 1/20 E. Both theoretical and experimental results confirmed the use of a higher value of E, for FRP strengthened beams than that for the control beam. The ultimate flexural strength and stiffness of the beams with bonded CFRP laminates was found to be significantly higher than that of the control beam.

- In 1994, C. A. Ross et al.[33] tested 24 reinforced concrete beams strengthened with CFRP plates externally bonded to the tension. Even though the same CFRP cross-sectional area was applied in all beams, the internal steel reinforcing ratio was different for all the specimens. Considerable enhancement was achieved by bonding of the CFRP laminates to the beams having the lower reinforcing steel ratios. However, the addition of CFRP to the beams that have the higher reinforcing steel ratios resulted in significantly less strength enhancement. The peak load for the FRP strengthened beams having the lowest reinforcing steel ratio was as high as three times that of the control beam. It was also observed that retrofitted beams with the lower reinforcing steel ratios failed by delaminating of the composite, while the retrofitted beams with the higher reinforcing steel ratios failed by concrete crushing accompanied by horizontal cracking in the vicinity of the tension steel reinforcement. The authors reported that at the load corresponding to yielding of the tensile steel, approximately seventy five percent of the beam stiffness was attributed to the CFRP plates.

Thus, the authors concluded that a high CFRP modulus was more important than a high tensile strength in increasing flexural stiffness.

- In 1995, Kobayashi and others[34] used CFRP sheets to upgrade an existing reinforced concrete bridge in Japan. The bridge had been in service since 1977. Many flexural cracks were observed on the undersides of the concrete deck slabs, thus need their repair and strengthening. The deck slabs were originally designed for a maximum vehicle load of 20 tons; however, an evaluation of the reinforcing steel stresses for a 25 ton vehicle (upgraded capacity) indicated that the allowable design stress was exceeded. The bridge was repaired with one ply of CFRP sheets bonded to the bottoms of the deck slabs spanning in the longitudinal direction, and with an additional one ply sheet spanning in the transverse direction of the deck slabs. The total applied cross-sectional area of the composite for the entire bridge was 164 m^2, and the entire repair work was completed in two weeks. After all repairs were completed, reinforcing steel strains and deck-slab displacements at midspan were recorded for a 25 ton test truck traveling across the bridge. The comparison of the recorded test data both before and after the bridge repair indicated that the primary reinforcing steel stresses were reduced by 30 to 40 percent and the secondary reinforcing steel stresses were reduced by 20 to 40 percent. The midspan deflections of the deck slabs were decreased by 15 to 20 percent.

- Also in 1995, M. J. Chajes et al. [35] tested twelve reinforced concrete T-beams to study the effect of using externally applied composite fabric as a method of increasing beam shear capacity. Three different types of composite were used in the study so that the effects of the fabric modulus of elasticity and tensile strength could be examined. The selection of the adhesive was based on the results of pull-off tests using 25 mm wide fabric strips bonded to a concrete specimen. Test results for eight beams strengthened for shear were compared with the corresponding results for the four control beams. Debonding of the fabric from the concrete did not occur in any of the tests. The behavior of the

strengthened beams was similar to that exhibited by the control beams both before and after cracking. Before cracking in the beam occurred, recorded strains in the fabric were very low. However, after cracking, the fabric strains increased significantly until failure occurred. The test results indicated that externally bonded composite fabric increased the ultimate shear strength by 60 to 150 percent. An analytical method was presented for predicting the ultimate shear capacity of beams strengthened with bonded composite.

- During 1995, Nanni[36] reported several examples of bridges in Japan strengthened with FRP. The Hata Bridge was strengthened to accommodate additional loads caused by the construction of larger windbreak walls. The strengthening project began in the spring of 1994 with the erection of a suspended light scaffolding to facilitate application of the composite. Approximately 100 m^2 of CFRP was used in the project. The effectiveness of the strengthening method was examined by conducting an on-site load test which indicated a considerable reduction in reinforcing steel strains. In another project, the Hiyoshikura Bridge was strengthened in flexure to increase the load rating of the structure. The soffit of the deck slab suffered from extensive flexural cracking. The cracks were sealed and approximately 164 m^2 of two ply CFRP was applied to the underside of the deck slab. Upon the completion of the repair work, moving vehicle load tests were conducted. The results of these tests indicated that a 30 to 40 percent reduction in reinforcing steel stresses was achieved.

- In 1999, M. A. Erki and U. Meier[37] presented the test results of four 8 m beams externally strengthened for flexure, two with CFRP laminates and two with steel plates. Impact loading was induced by lifting one end of the simply supported beams and dropping it from given heights. The strain rates induced in the CFRP laminates were at least three orders of magnitude greater than the strain rates used for testing CFRP laminate coupons in tension. Comparisons are made between the dynamic impact behavior of the beams strengthened

with CFRP laminates and steel plates, and the behavior of both beam types is modeled using an equation of motion. The beams externally strengthened with CFRP laminates performed well under impact loading, although they could not provide the same energy absorption as the beams externally strengthened with steel plates. Additional anchoring, at least at the ends of the CFRP laminates, would improve the impact resistance of these beams. Good predictions were made with the derived equation of motion by using the flexural stiffness of the beams at their ultimate limit state.

- K.T., Lau and et in 2001[38] wrote a paper in which a simple theoretical model to estimate shear and peel-off stresses is proposed. Axial stresses in an FRP-strengthened concrete beam are considered, including the variation in FRP plate fibre orientation. The theoretical predictions are compared with solutions from an experimentally validated finite element model. The results from the theory show that maximum shear and peel-off stresses are located in the end region of the FRP plate. The magnitude of the maximum shear stress increases with increases in the amount of fibres aligned in the beam's longitudinal axis, the modulus of an adhesive material and the number of laminate layers. However, the maximum peel-off stress decreases with increasing thickness of the adhesive layer.

- In 2003, V. M. Karbhari et al.[39] presented a synopsis of a gap analysis study undertaken under the aegis of the Civil Engineering Research Foundation and the Federal Highway Administration to identify and prioritize critical gaps in durability data. The lack of a comprehensive, validated, and easily accessible data base for the durability of fiber-reinforced polymer (FRP) composites as related to civil infrastructure applications has been identified as a critical barrier to widespread acceptance of these materials by structural designers and civil engineers. This concern is emphasized since the structures of interest are primarily load bearing and are expected to remain in service over extended periods of time without significant inspection or maintenance. The study

focuses on the use of FRP in internal reinforcement, external strengthening, seismic retrofit, bridge decks, structural profiles, and panels

- A study done by K. Tanand and M. Saha in 2006[40] was aimed at investigating, both analytically and experimentally, the long-term deflection characteristics of FRP-bonded beams under sustained loads. Nine reinforced concrete beams, six of which were externally bonded with glass FRP composite laminates, were subjected to sustained loads for 2 years. The test parameters were the FRP ratio and sustained load level. The long-term deflections of the beams were reduced 23 and 33% with a FRP ratio of 0.64 and 1.92%, respectively. The total beam deflections were accurately predicted by the adjusted effective modulus method, and overestimated by about 20% by the effective modulus method.

- M.R, Aram et al[41] presents a paper in 2009 in which different types of debonding failure modes are described. Then, experimental results of four-point bending tests on FRP strengthened RC beams are presented and debonding failure mechanisms of strengthened beams are investigated using analytical and finite element solutions. Reasonable results could be obtained for modelling of debonding failure load of tested beams. Existing international codes and guidelines from organizations such as ACI, fib, ISIS, JSCE, SIA, TR55, etc. are presented and compared with the results from the experiments and calculations. A discrepancy of up to 250% was seen between different codes and guidelines for predicting the debonding load.

- A. Mofidi and O. Chaallal in 2011[42] presented the results of an experimental and analytical investigation of shear strengthening of reinforced concrete (RC) beams with externally bonded (EB) fiber-reinforced polymer (FRP) strips and sheets are presented, with emphasis on the effect of the strip-width-to-strip-spacing ratio on the contribution of FRP (Vf). In all, 14 tests were performed on 4,520-mm-long T-beams. RC beams strengthened inshear using carbon FRP (CFRP) strips with different width-to-spacing ratios were considered, and their performance was investigated. In addition, these results

are compared with those obtained for RC beams strengthened with various numbers of layers of continuous CFRP sheet. Moreover, various existing equations that express the effect of FRP strip width and concrete-member width and that have been proposed based on single or double FRP-to-concrete direct pullout tests are checked for RC beams strengthened in shear with CFRP strips. The objectives of this study are to investigate the following: (1)the effectiveness of EB discontinuous FRP sheets (FRP strips) compared with that of EB continuous FRP sheets; (2)the optimum strip-width-to-strip-spacing ratio for FRP(i.e., the optimum FRP rigidity); (3)the effect of FRP strip location with respect to internal transverse-steel location; (4)the effect of FRP strip width; and (5)the effect of internal transverse-steel reinforcement on the CFRP shear contribution.

- In 2013 I.A, Bukhari et al[43] present the results of a series of tests on short span reinforced concrete beams which were strengthened in shear with various arrangements of externally bonded carbon fibre reinforced polymer (CFRP) sheets. The objective of the tests was to determine the effect of changing the area and location of the CFRP sheet within the shear span. A total of fifteen 150 mm × 300 mm × 1,675 mm concrete beams were tested of which four were un-strengthened control specimens. The remaining 11 beams were strengthened with varying configurations of CFRP sheets. Parameters varied in the tests included the area of CFRP sheet, its anchorage length and the distance of the CFRP sheet from the support. The experimental results revealed that the CFRP is more effective when it is placed close to the supports and even small areas of CFRP can give significant increases in shear strength. The experimental results were compared with the three different existing shear prediction models for estimating shear contribution of CFRP sheets. A simple strut-and-tie model is presented which gives reasonable predictions of shear strength for the beam specimens, which were strengthened with CFRP over the full depth of the beam.

Chapter 4: Application in bridge strengthening

4.1 Description

Strengthening and retrofitting of existing structures using externally bonded FRP composites are one of the first applications of FRP introduced in civil engineering. The technique is simple, rapid, and effective.

FRP used for strengthening and retrofitting can be in the forms of FRP sheet or strip, depending on their application. Externally bonded FRP composites have been used for increasing both flexural and shear capacity of concrete elements, including girders, beams and slabs[44]. Three methods are used for application of external FRP reinforcement:

- Adhesive bonding: The composite element is prefabricated and then bonded into the concrete substrate using an adhesive under pressure. Its main properties are a rapid application, good quality control of incoming material, dependent in adhesive integrity and that the temperature effects the adhesive [45].
- Hand lay-up: In this method, resin is applied to the concrete substrate and then the layers of fabric are impregnate using roller. Notice that the composite and the bond are formed at the same time. Its main properties are that it is a slower process that need more equipment, can produce waviness and wrinkling of fibers and there are ambient cure effects [46].
- Resin infusion: Reinforcing fabric is placed over the area under consideration and the entire area is encapsulated in a vacuum. Alternatively, the outer layer is fabric is partially cured prior to placement to obtain a good surface Its main properties in this case are far slower with need for significant equipment, ambient cure effect and dry spots [47].

FRP composites can be used in seismic retrofitting of reinforced concrete bridges in the form of wrapped column for column confinement. Conventional methods used for seismic retrofit of reinforced concrete columns include the use of steel shells or casings, the use of steel cables wound helically around the column, and the use of external reinforced concrete section. However, these methods introduce additional

stiffness, due to the isotropic nature of the retrofitting material, to the structural system and, therefore, higher seismic force can be transferred to adjacent elements. In addition to this, traffic disruption is a major problem during retrofitting operation. With the use of FRP composite, on the other hand, the FRP confinement provides only hoop stress, hence no additional stiffness. It also causes no or little traffic disruption.

4.2 Advantatges of using FRP over traditional materials

4.2.1 Low weight

Relatively high strength and stiffness (discussed in a next point) allow designers to develop designs at lower weights. In civil infrastructures, weight savings could result in various advantages such as better seismic resistance, ease of application of and a decrease in need for large foundations. In addition, the drive to increase traffic ratings means that there is a huge potential to replace older and deteriorated bridge structures with FRP materials since weight savings from FRP materials can improve the live load capacity without the expense of new structures and approach works. The most common is replacing bridge decks made of traditional materials by those of FRP composites [48].

This low weight also helps economicaly because save in preparation and auxiliar material for application.

4.2.2 Corrosion resistance

FRP materials possess a substantially higher resistance to corrosion, aggressive media and chemical reagents than the traditional materials such reinforced concrete, steel or wood. This characteristic makes them attractive in applications where corrosion is a concern [3][7][12].

It also allows the composite structures to have a long service life without additional maintenance cost, what is a important issue for the civil engineers in order to decide for a FRP material instead of a traditional one.

4.2.3 High stiffnes and specific strength

FRP composites show great improvements in strength-to-weight and stiffness-to-weight ratios. An example of comparison of typical ranges of FRP composite characteristics with those of traditional materials can be noted from Table 6.

Tipical properties	Material					
	Duraluminium	Titan TiA 16Va4	Steel St52	GFRP	CRFP quasiisotr. Vol. Fraction 60%	CRFP orthotropic Vol. Fraction 60%
Density ρ [g/cm3]	2.8	4.5	7.8	2.1	1.5	1.7
Tensile Strength R_m[MPa]	350	800	510	720	900	3400
Specific Strength R_m/ρ [Mpa·cm3/g]	125	178	65	340	600	2000
Modulus of Elasticity E [GPa]	75	11	210	30	88	235
Specific Young's Modulus E/ρ [Gpa·cm3/g]	27	2	27	14	59	138

Table 6: Comparison of properties of various construction materials to FRP composites

The elements made of composites unidirectionally reinforced by carbon fibres have a much higher tensile strength than other materials, this is why CFRP is used mostly in elements carrying tensile forces. Even more, the value of Young's modulus of orthotropic CFRP composite is comparable to modulus of steel, that has over five times larger density.

On the other hand, GFRP composites perform slightly worse, while the tensile strength is greater than steel (although this is not a rule), its stiffness is not satisfactory. Even that, it is more frequently used due to the fact that it is less brittle (it is able to carry shear forces) and has much lower price [7].

4.2.4 Quick transportation and instalation

Civil engineering is often characterized by long construction and installation periods, which can result not only in delays in the opening of facilities but also in considerable inconvenience to users and in huge economic increases. Even more, the use of conventional materials is often seasonal, resulting in large periods in which no work is possible. In contrast with that, large composite parts can be fabricated off-site or in factories due to their light weight and can be shipped to the construction site easily and installed using light equipment. This fact minimizes the amount of site work and reduces the costs of transportation. This property might make FRP composite a great material for demountable constructions.

This property may also lead to year-round installation of the FRP structures with its attendant increase in overall construction efficiency and positive effect on planning and logistics. However, field joining of composite structural components may require knowledge in adhesive bonding under varying pressure, temperature and moisture conditions [7] [12].

4.2.5 Better Fatigue Life

Most composites are considered to be resistant to fatigue to the point that fatigue may be neglected at the material level in a number of structures, leading to design flexibility. To characterize the fatigue behavior of structural materials, stress amplitude versus number of cycles diagram is typically used, where the number of cycles to failure increases continually as the stress level is reduced. If below a certain value of stress no fatigue failure is observed then infinite material life can be assumed.

The limit value of stress is called fatigue or endurance limit. For mild steel and a few other alloys, an endurance limit is observed at 10^5 to 10^6 cycles. For many FRP composites, an apparent endurance limit may not be obtained, although the slope of the stress amplitude versus number of cycles curve is substantially reduced at low stress level. In these cases, it is common design practice to specify the fatigue strength of the FRP material at very high number of cycles, e.g., 10^6 to 10^7 cycles, as the endurance limit.

Unlike most metals, FRP composites subjected to cyclic loads can exhibit gradual softening or loss in stiffness due to microscopic damage before any visible crack appears. For example, potential fatigue damage mechanisms in unidirectional fiber reinforced composites loaded parallel to the fibers are: fiber breakage, interfacial deboning, matrix cracking and interfacial shear failure. Damage and cracking resulting from fatigue and fretting fatigue is one of the reasons for significant distress in bridge and building components. However, the fatigue resistance of bonded and bolted connections may control the life of the structure.

A decreased concern related to fatigue resulting from the use of composites can lead to significant innovation in structural design, especially in seismic areas [7].

4.2.6 Sustainability (Effects on the environment)

The question of the sustainability of FRP materials has to be considered in a differentiated way. In one hand, the use of glass fibers can be classified as sustainable and ecological, on the other hand, the use of carbon fibers is more problematic mainly because of the high energy requirements that it has.

Glass fibers, made mainly from quartz powder and limestone, are environmentally friendly and the basic resources are inexhaustible. With regard to the question of energy consumption, glass fiber/polyester components, for example, require for their manufacture 1/4 the energy needed for producing steel or 1/6 that for aluminum.

Also the polymer matrix has to be considered with regard. Today mostly thermosetting polymers are used, which when bonded with fibers can only be recycled in a limited way (processing to granulate and use as filler material). However, every day is more common the replacement of thermosets by thermoplastics that can be melted down, permitting full recycling [7].

The application of polymers for structures can be one of the most sustainable uses of fossil fuels since the polymers that are used today are waste products from the oil industry. In their use for structural components, however, the energy possessed by the starting materials is stored for several decades, in the case of recycling easily for over

100 years. In addition, the required amount of material, even if their application increases in the future, is comparatively insignificant. Even more, in principle other organic basic materials can be used alternatively at any time.

To sum, FRP materials are as least at sustainable as the traditional construction materials such as concrete, steel or timber [20].

4.2.7 Non electrically conductive

FRP composites do not conduct electricity. Taking advantage of that property, they can be used for constructions located in the areas of risk of electric shock such as footbridges over the railway traction or bridges in factories [49].

4.2.8 Resistance to frost and de-icing salt

FRP composites show good resistance during freeze-thaw cycles and are resistant to de-icing salts, which for inadequately protected steel reinforcement can be devastating.

This property is makes the FRP composites very useful in cities whit very cold winters such as Chicago. For that reason, the department of transportation of Illinois is seriously taking into account the use of FRP in their coming projects of bridge strengthening [50].

4.3 Disadvantatges of using FRP over traditional materials

4.3.1 High short-term and uncertain long-term costs

In general, costs incurred in a construction project using FRP composites are divided in short-term and long-term costs.

Short-term cost includes material cost, fabrication cost, and construction cost. Material and fabrication costs of FRP composites for civil engineering application are still expensive compared to traditional materials. Most fabrication processes are originally used in the aircraft, marine and car industries, in which mass production of

one design specification is common. On the other hand, civil engineering industry involves the design and construction of large-scale structures, in which design specifications are usually different from project to project, so some manufacturing techniques of FRP may not be economically suitable for civil engineering industry. Light-weighed and modular components made from FRP can help decrease construction cost. This includes easy erection or installation, transport and no need for mobilization of heavy equipment. Manufacturing costs can be reduced with a continuous fabrication process that minimizes labor. Also flexible fabrication methods for large structural components that do not require expensive tooling, such as vacuum assisted resin transfer moulding (VARTM), can help reducing costs. More saving, even difficult to quantify, can also be achieved from less construction time, less traffic disruption, or other factors commonly affected by construction project. These advantages have to be considered on case-by- case basis. But even with those savings, material costs based on per unit performance are higher.

Long term cost of FRP composites is more complicated to evaluate because it involves various unpredictable costs, such as maintenance, deconstruction, and disposal costs. Some costing techniques have been developed. One of them is the "Whole of Life" technique, derived from life-cycle costs, including initial cost, maintenance cost, operating cost, replacement and refurbishing costs, retirement and disposal costs, etc., through out of the expected life-span of the project. Using this technique, FRP composite and traditional materials can be compared by calculating economic advantages for structures designed for same performance criteria. As environmental awareness increases, long-term cost of project becomes more important. Along with performance characteristics, such as stiffness and strength, sustainability has become one of the criteria in selecting construction material [3].

Unlike other industries, in which FRP composites have been successfully introduced, construction industry is very cost-sensitive. It is really difficult to justify the use of FRP composite over other cheaper construction materials when a project does not require a specific advantage of FRP composites. The claim of lower life-cycle cost is also difficult to justify because limited number of relevant project have been build using FRP composites [7] [12].

4.3.2. Uncertain durability

Various laboratory tests are undertaken to verify the durability of FRP materials in different micro- and macroclimates. However, a standardization of these tests and a calibration based on external tests under real environmental conditions and attack of the elements is absolutely necessary to answer the important questions concerning the durability of FRP materials. Although polymeric matrices are susceptible to degradation in the presence of moisture, temperature and corrosive chemical environments, the main concern related to the durability of FRP composites is the lack of substantiated data related to their long-term durability. It should be kept in mind that FRP composites have only been used, even in the aerospace world, for structural components for about 60 years, and therefore there is no substantial anecdotal evidence. Further, the resin systems and manufacturing methods that are likely to be used in civil infrastructure applications are not the same as those that have been characterized in the past by aerospace industries [3] [7].

4.3.3. Lack of ductility

FRP composites do not show definite yield like steels. Ductile materials allow for a favorable redistribution of the internal forces linked with an increase in structural safety, a dissipation of energy from impact or seismic actions as well as a warning of a possible structural problem due to large plastic or inelastic deformations before failure. Thus the lack of ductility at the materials level can be a cause of concern to some designers.

However, at the structural level, components fabricated from FRP composites can be designed to exhibit a sequence of damage mechanisms, which ensures a relatively slow failure with extensive deformation, leading to a progressive and safe mode of failure. One example of a structural system that can develop extensive deformation prior to failure is GFRP bridge deck adhesively bonded to steel girders [12].

4.3.4. Low fire resistance

In bridge construction, fire resistance is important above all for structural elements exposed to a fire on a bridge deck or under a bridge (on a road or in a depot). FRP materials are in principle combustible and have low fire resistance, sometimes with unhealthy gases. There are some types available that are fire-retardant, self extinguishing and do not exhibit a development of toxic fumes, but there is little knowledge on their loss of strength in fire. Compared with steel the loss of strength begins much earlier, for polyester at about 80oC. If there is a potential danger due to fire, considerable improvement of the behavior can be achieved using phenol matrices instead of polyester. Otherwise there is a need for utilizing constructional measures (fire protection) or structural measures (redundant systems) [51].

4.3.5. Lack of Design Standards

Civil design and construction is widely dominated by the use of codes and standards predicated on the use of well-documented and standardized material types. Bridge engineers are trained to utilize appropriate material in appropriate manner, according to these standards. They do not need expertise in material science to design, construct, and maintain bridges of conventional material like concrete or steel. However, application of FRP composite at current state requires knowledge in material behavior and manufacturing process far more than for the conventional materials. One example is the prediction of failure mode of FRP composite, which requires knowledge of fibre orientation and fibre-matrix interaction. With the lack of official standards specifying the design of FRP composite structures (there are only Design Guides available) [52], in most cases it simply cannot be preferred material.

Even that, there is a lot of countries that have their own codes as the ACI440.2R-08 in US, the CND-DT2000/2004 in Italy or the TR-55 from England. Moreover, a group of people is working to add a chapter of FRP in the Eurocode 2.

4.3.6. Lack of Knowledge on Connections

The design of connections in FRP composite structural systems is still not well developed. Designs are being adopted from metallic analogues rather than developed for the specific performance attributes and failure modes of FRP composites. This has often resulted in the use of high margins of safety causing designs to be cost inefficient, or leading to premature failure. Critical connection problems associated with application of composites in construction include issues of attachments, flexible joints, and field connections. In general, joints and connections should be simple, durable, and efficient to provide adequate deformability. Similar to other construction technologies, the connections should not form the weak link in the overall system. A wealth of information is available from the aerospace industry on joints, splices, and connections of FRP composites, but only limited use has been made of this resource, perhaps due to the inherent disconnect between aerospace and civil design methods[12].

Chapter 5: Case of Study [53]

5.1 Description of the bridge

The bridge selected for rehabilitation was built in 1952 and is located on Alabama Highway 110. The bridge is not skewed, and has a 7.32 m clear roadway width with two 3.20 m traffic lanes and a 0.46 m shoulder on each side [30]. It was designed in accordance with specifications of the Alabama State Highway Department for an AASHTO H15-44 design load [54]. The primary construction materials are Class "A" bridge concrete and structural carbon steel. All steel internal reinforcement has deformations in accordance with ASTM-A-305-49 [55] and is intermediate grade new billet or rail steel, as permitted in the specifications.

The bridge deck consists of a 152 mm thick slab with shrinkage and temperature reinforcement of #4 bars spaced at 330 mm on center, as show in Figure 2.1. Transverse reinforcement is provided by #4 bars spaced at 279 mm on center.

Four standard reinforced concrete girders support the deck. The girders are spaced transversely at 1700 mm clear spacing. Tensile reinforcement for each girder consists of two layers of #11 rebar spaced as shown in Figure 2.3. Shear reinforcement consists of #4 double leg stirrups spaced as shown in Figure 2.4. The bridge girders are subjected to a maximum dead load moment of 172 kN-m, which corresponds to a dead load stress of 58.12 Mpa in the reinforcement at midspan. The factored load moment capacity was calculated to be 380 kN-m.

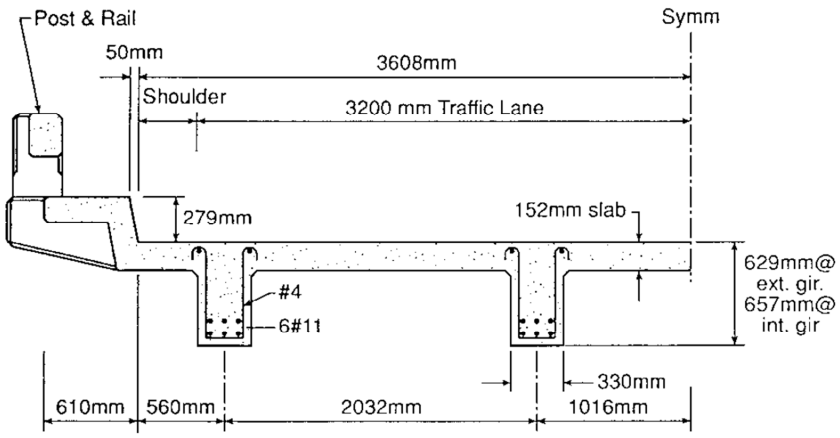

Fig. 7: Bridge cross section with girder details [46]

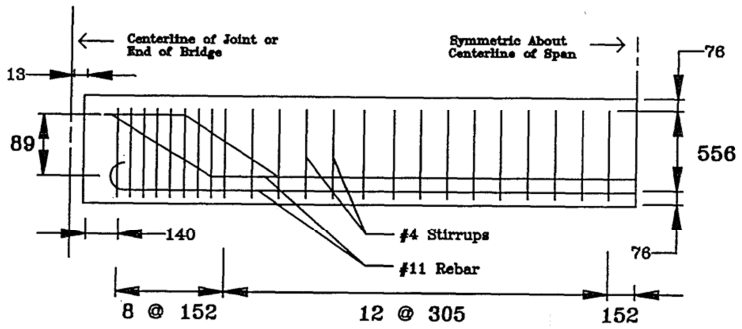

Fig. 8: Elevalion view of girder showing shear reinforcement 1 [46]

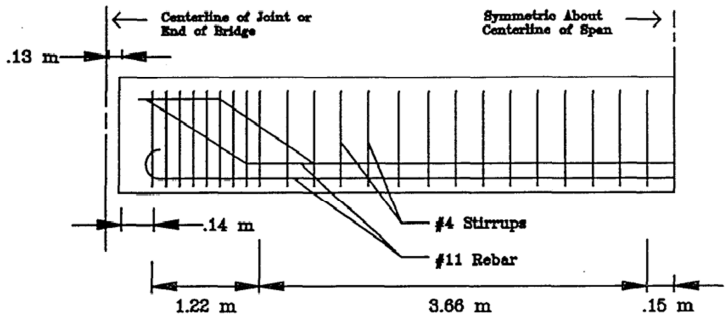

Fig. 9: Elevation view of girder showing shear reinforcement 2 [46]

5.2 Repair plan

There were multiple goals for the repairs. Application of FRP plates offered a way to mitigate the deterioration of the bridge resulting from the widening of the flexural cracks due to repeated heavy traffic loading. The FRP also provided increased load capacity, although an increase in load rating was not a goal. In 1995 when the repairs were performed, there were very few examples of flexural strengthening of in-service structures using FRP composites. So, an important goal of the project sponsor was to determine whether FRP could actually be installed under field conditions before additional effort was expended on researching the details of FRP strengthening. The project also provided as in-service trial for observing and evaluating the durability of the repair concept. Hence, the repair was performed before all of the technical issues regarding the design of FRP repair systems were resolved.

One span of the bridge was chosen for repair by the application of FRP plates. A CFRP plate was applied to the bottom surface of each girder, and a GFRP plate was applied to each side of three of the four girders, as shown in Fig.10. The material was not

wrapped around the bottom corners of the cross section because that would have required expensive and impractical forming of the prefabricated, autoclaved FRP plates. Fig. 10 shows a numbering system for the girders, and shows that girder 1 did not have GFRP on the side surfaces. The GFRP plates are weaker, but less expensive, and were applied to the sides to resist opening of the flexural cracks and to add stiffness to reduce the bridge deflections. By leaving the GFRP off of girder 1, that girder served as a standard of comparison to investigate the effects of the GFRP on the performance of the other girders.

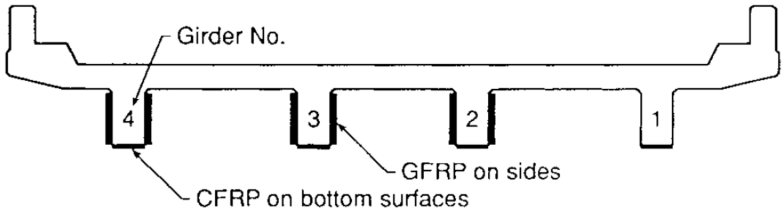

Fig. 10: Locations of GFRP and CFRP plates [46]

A 20% increase in bending moment capacity was the target used to estimate the amount of CFRP needed in the repairs, and the strengthening effect of the GFRP was neglected. The required area of CFRP was calculated from a preliminary cross-sectional analysis assuming:

- Plane sections remain plane

- Rectangular concrete stress distribution

- Yielding of the tension steel

- Linear elastic behavior of the CFRP

The amount of FRP used in this study was relatively small and was not intended to produce a doubling or tripling of the existing capacity because the structure did not need that level of strengthening. By use of a small amount of FRP instead of a large amount, the possibility of changing the failure mode of the structure to a nonductile failure was avoided. The repairs were representative of those required by many structures that are generally in good condition but need a moderate increase in strength to allow the removal of posted load restrictions.

For general applications of FRP plates in bridge repairs, splicing of the plates appears necessary or convenient to expedite the procedure. As shown in Fig. 4, both the CFRP and the GFRP plates were spliced in this study, thus providing the opportunity to evaluate splice performance. The splices were accomplished using butt joints reinforced by lap splice plates at approximately the one-third points of the span.

5.3 Materials used

Both the CFRP and the GFRP plates were unidirectional, with the fibers oriented parallel to the longitudinal axis of the plate. The GFRP primary plates had overall dimensions of 1 mm 3 356 mm 3 3.28 m, and the GFRP splice plates had dimensions of 1 mm 3 356 mm 3 914 mm. All of the GFRP plates were a six-ply uniaxial laminate. The material classification was a standard E-glass, having a room temperature tensile strength of 448 MPa and a modulus of elasticity of 23,700 MPa.

The CFRP primary plates had overall dimensions of 1.3 mm 3 267 mm 3 3.09 m, and the CFRP splice plates had dimensions of 1.3 mm 3 356 mm 3 914 mm. All of the CFRP plates were a six-ply uniaxial laminate having a room temperature tensile strength and modulus of elasticity of 1,190 MPa and 121,000 MPa, respectively. The material classification for the CFRP was an AS4/1919 graphite/epoxy composite that was 60% graphite fiber by volume.

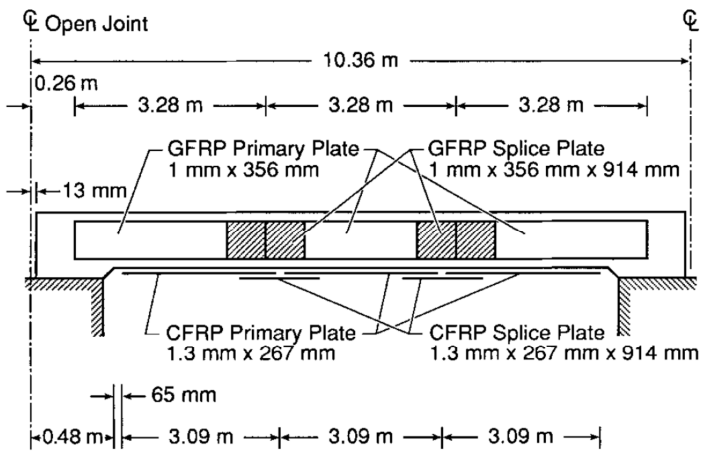

Fig. 11: Typical FRP details [46]

The adhesive used to bond the FRP plates to the concrete girders was a readily available structural adhesive, Dexter-Hysol EA 9460. The adhesive was selected based

upon the designers' previous experience with the product in several laboratory studies. The adhesive is a two component epoxy with 1:1 mix ratio. The manufacturer's specified tensile top shear strength is 24.1 MPa at 257C, with a tensile modulus of 2,760 MPa.

5.4 Repair procedure

A combination of laboratory trials, past experience, literature review, and recommendations from FRP manufactures was used to develop the repair procedure. Different repair procedures have been developed for combinations of materials other than those used in this study.

5.4.1 Preparation of the surface

To ensure the integrity of the bond between the FRP plates and the surface of the concrete girders, proper preparation of both the concrete and the FRP plate surfaces was required.

The surface roughness of the girder was first smoothed using a handheld grinder so that the FRP plates would be in full contact with this girder surface. Areas of extreme roughness on the concrete surface were ground down until they were relatively flat. Surface flatness was ascertained by placing a yardstick along the refinished girder surface and observing the completeness of contact between the two. The concrete girder surfaces were further smoothed and abraded by sandblasting until the coarse aggregate was visible. The girders were then pressure washed with a solution of mild detergent and hot water to remove excess dust, grease, and other substances that might adversely affect the bond between the girder and the FRP plates.

The smooth surfaces of the FRP plates were prepared using a 100 mm diameter, 100 grit sanding disk on a handheld rotary sander. The FRP plates were lain flat on a table, with the contact surface facing upward. The surfaces were sanded using a back and forth motion across the width of the plates. All contact surfaces requiring epoxy bonding were sanded, including those at the lap splice joints. The surfaces were then cleaned with methyl-ethyl-ketone to remove loose material.

5.4.2 Application of the FRP

The application procedure of the FRP plates included marking the locations of the plates on the girder surfaces, mixing the epoxy, applying the epoxy to the plates, positioning the plates on the girders, rolling the plates to ensure good contact, and applying pressure during epoxy curing by means of a vacuum bag. As illustrated by the splice locations in Fig. 10, the plates were placed over one-third of the length of a girder, and the epoxy was allowed to cure.

Based on the available manpower and vacuum capacity, the FRP plates were applied to the bottom and sides of one-third lengths of two adjacent girders simultaneously.

The epoxy was mixed using a handheld drill motor with a wall plaster mixing attachment. For application of three FRP plates over one-third of the length of a girder, 2 L of epoxy were mixed. A uniform layer of epoxy approximately 1.5 mm thick was applied directly to the FRP plates, which were lying on a table, by using a trowel with grooved edges. The epoxy was sufficiently sticky, so the FRP adhered to the girder while paint rollers were used to press it into position. The vacuum bag was created using a sheet of plastic wrapped around the bottom and sides of the girder. The edges of the plastic sheet were sealed to the girder using an aerosol adhesive. A vacuum pressure of at least 0.034 MPa was maintained over the entire surface of the FRP plates for 6 h, as required for curing of the adhesive. Bridge traffic was stopped for approximately one week for application of the FRP plates to the entire bridge. Notice that the FRP was not covered with any protective coatings or barriers after application.

5.5 Load tests

Load tests were performed both before and after the application of the FRP plates with load test trucks of known axle configuration and weight distribution. The two vehicles used for the load tests were identical load test trucks. These trucks had a three-axle configuration with a gross vehicle weight of 346 kN distributed as shown in the figure above.

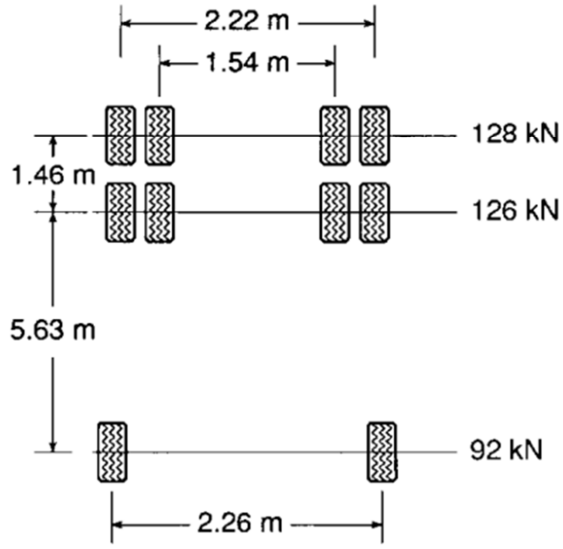

Fig. 12: Load truck configuration [46]

Static and dynamic tests were performed on the bridge. For the static tests, the trucks were positioned with the center axle at midspan in four different transverse positions. Load positions 1 and 2 are illustrated in Fig. 13 and 14. Load position 3 is the mirror image of position 1 about the bridge centerline, and position 4 is the mirror image of position 2.

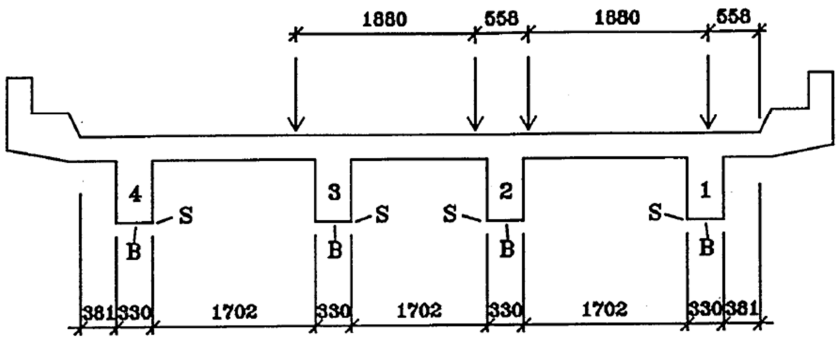

Fig. 13: Static truck load position 1 [46]

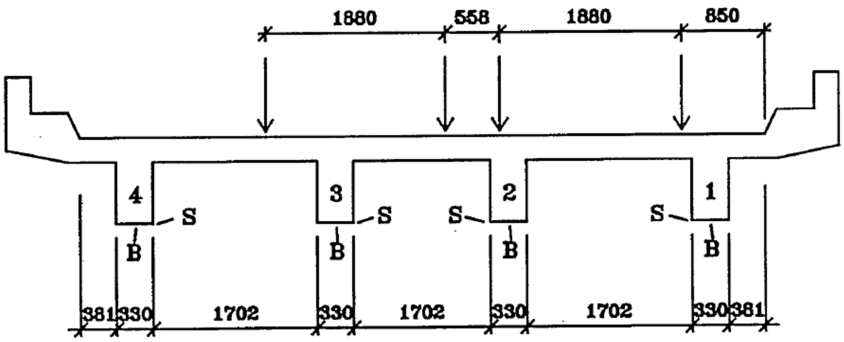

Fig. 14: Static truck load position 2 [46]

The spacing between the test trucks and the distance from the curb to the wheel loads are significantly less than those required for design by AASHTO [47].These spacings were chosen to produce the most extreme load conditions possible. Load position 1 creates the most severe loading on girders 1 and 2. Load position 3 creates the most severe loading on girders 3 and 4. Load positions 2 and 4 create less severe loadings.

Before the trucks were positioned on the bridge, the data acquisition system was balanced to establish a reference point of zero live load strain. After a zero reference point was established, the trucks were directed to the specified load positions. Data were then recorded for each sensor. The trucks were then moved off of the bridge and the sequence was repeated for the next load position. The full series of static loadings at each position was repeated four times, both before and after the FRP was installed.

Dynamic tests were also conducted using the same test vehicles traveling at 80 km/h side by side across the bridge and centered in the traffic lanes. The data presented are the average of the peak values recorded in multiple tests as the test trucks crossed the bridge in the eastbound direction.

5.5 Instrumentation used for the tests

Electrical resistance foil strain gauges with a nominal resistance of 350 ohms were used to measure the strain response to test truck loads in the reinforcing bars, on the FRP plates, and on the surfaces of the concrete girders, both before and after the FRP was applied. Two gauges with a gauge length of 12.7 mm were installed at approximately 100 mm on each side of the midspan, on the middle bar of the bottom row of tensile reinforcement in each girder, as shown in Fig. 15. These gauges were installed by first removing a small volume of concrete to expose the bar. The concrete was repaired before the field tests were performed.

Strain gauges with a gauge length of 102 mm were installed on the concrete surfaces of the girders at midspan prior to application of the FRP. However, due to the existing flexural cracking of the concrete girders, the surface mounted strain gauges did not render any usable results.

After application of the FRP plates, gauges were installed on the plate surfaces. Fig. 15 also shows the positions of these gauges. All gauges applied to the CFRP plates were at midspan, except for the four gauges installed on a CFRP splice plate on girder 2, as shown in Fig. 16. All gauges attached to the CFRP plates had a gauge length of 12.7 mm. Vertical deflections were measured at the midspan of each girder with linear variable differential transformers (LVDTs). The LVDTs had a range of 25.4 mm and a resolution of 0.003 mm.

All strain gauges were connected to a data acquisition system using a three-wire quarter bridge connection. Shielded cable was used for the strain gauges and LVDTs to reduce the electronic noise recorded with the data.

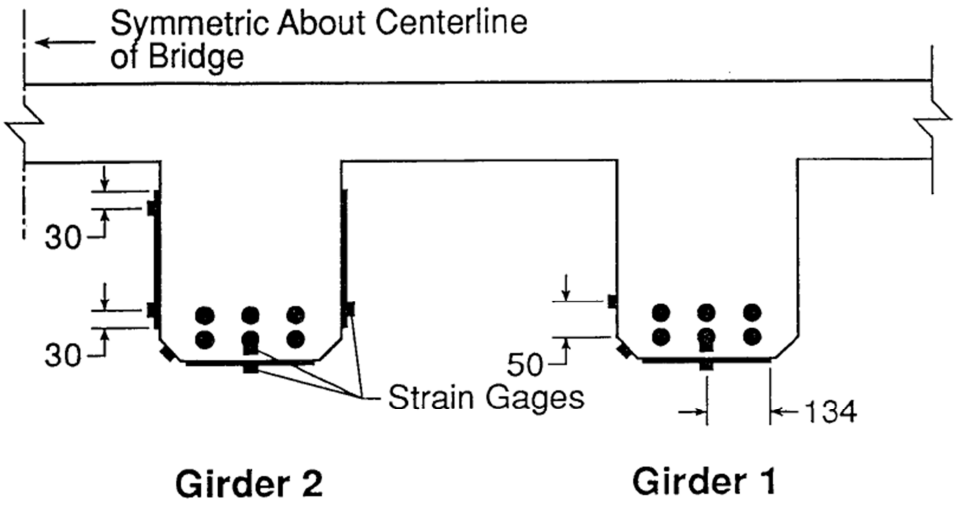

Fig. 15: Strain gauge locations at midspan [46]

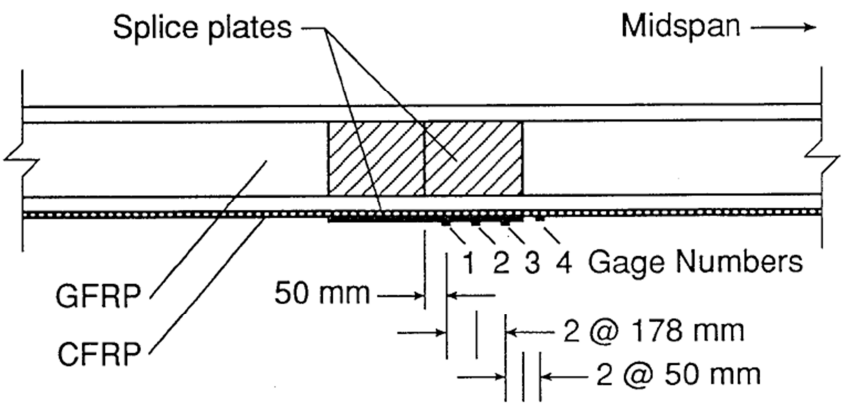

Fig. 16: Strain gauge locations on splice plate on girder 2 [46]

5.6 Results of the test

5.6.1 Rebar stresses

As described before, load tests were performed in each of the four truck loading positions explained in 5.4. These tests were performed both before and after application of the FRP. For each loading position, strain and deflection values were recorded for each sensor with strain gage and deflection sensor respectively. Measurements for each position were repeated four times. A single value was calculated for each sensor for each position by averaging the values recorded for that sensor in each of the four tests in order to analyze the results.

Loading position	Girder	Before FRP	After FRP	Percent difference
1	1	83	77	7
	2	92	85	7
	3	82	74	10
	4	37	34	8
2	1	76	72	5
	2	88	83	6
	3	85	77	9
	4	44	41	7
3	1	39	38	3
	2	72	67	7
	3	106	94	11
	4	83	74	11
4	1	47	45	4
	2	76	69	9
	3	102	90	12
	4	73	66	10

Table 7: Rebar Stresses from Static Tests (MPa) [46]

Average reinforcing bar stresses for all four static load positions are presented in Table 7 from above. These average values result from four repetitions of each load position, both before and after application of the FRP. No single measurement was more than 3 MPa from the corresponding average listed. The results shown in Table 7 for load positions 1 and 3 are plotted in Fig. 17 and the ones in position 2 and 4 are plotted in Fig. 18.

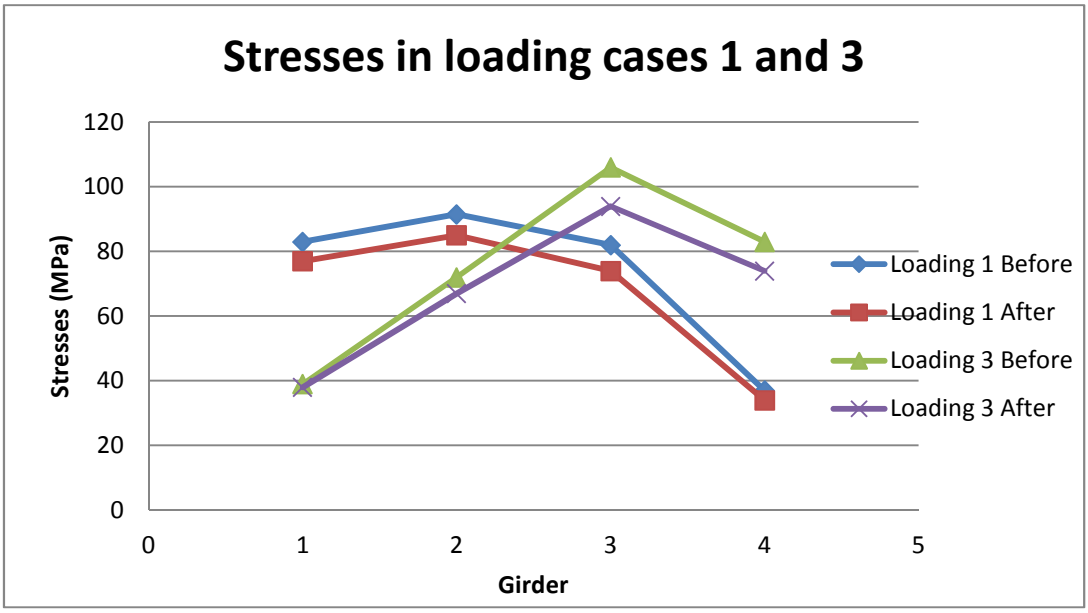

Fig. 17 Stresses from Static Tests in the liading case 1 and 3

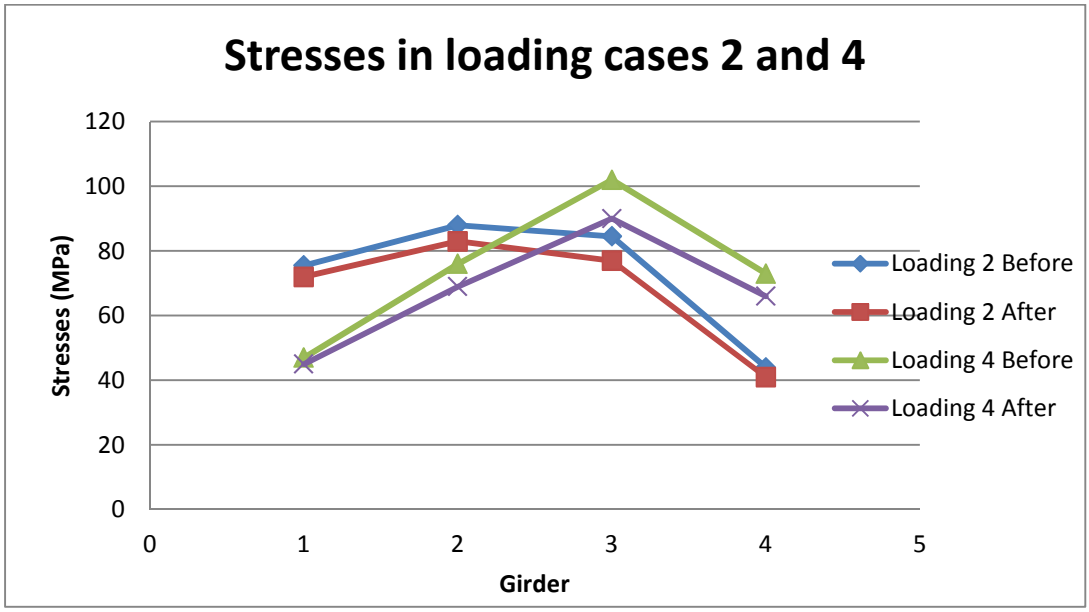

Fig. 18 Stresses from Static Tests in the loading case 2 and 4

The data in Table 7 and Fig. 17 and Fig 18 indicate some interesting general trends of behavior of the bridge. Fig. 17 shows that the response of the bridge for load position 1 is not perfectly symmetric about the bridge centerline with the response for load position 3, although symmetric responses might be expected because the loadings are symmetric. The somewhat nonsymmetrical pattern of response is consistently observed in all of the recorded data (i.e., both stresses and deflections). The same happens with Fig. 18.

Nonsymmetrical response patterns are not uncommon for load tests of existing bridges and often result from causes such as variations in friction at the girder supports or variations in deterioration across the structure. The test results in Table 7 and their figures associated also indicate that the largest rebar stresses are induced in the two interior girders that are in closer proximity to the wheel loads. The curbs at the outside edge of the bridge prevented the positioning of the test loading trucks to induce loads on the exterior girders as large as those experienced by the interior girders.

Comparisons of the rebar stresses in Table 7 show the reductions in rebar stresses due to application of the FRP range from 4% in girder 1 for load positions 2 and 3, to 12% in girder 3 for position 4. The average stress reduction for all four girders for all four load positions is approximately 8%. As shown in Table 7, the largest rebar stresses were measured at girder 3 for load position 3 before and after application of the FRP. So, girder 3 would control a load rating of the bridge based on the best results. Application of the FRP produced an 11% decrease in the rebar stress in girder 3 for this critical load position.

For each load position, the smallest stress reduction shown in Table 7 is always at girder 1. GFRP plates were not bonded to the sides of this girder. The test results indicate that the GFRP plates bonded to the girder sides had a noticeable effect on the overall stiffening of the girders.

5.6.2 Deflections

The average midspan girder deflections, measured in static tests before and after application of the FRP, are compared in Table 8. The largest deviation from the averages shown in this table in the four repetitions of the tests was 0.1 mm. The deflections listed in Table8 for load positions 1 and 3 are illustrated graphically in Fig. 19, and for load positions 2 and 4 in Fig.20. Reductions of deflections due to the application of the FRP range from 2% at girder 1 for load position 3, to 12% at girder 4 for each of the load positions. For each load position, the results indicate that the largest deflections were measured at the interior girders, as expected. Table 8 also

shows that for every load position the largest reduction in deflection consistently occurred at girder 4, which had GFRP side plates, and the smallest reduction of deflection occurred at girder 1, which did not have side plates.

Loading position	Girder	Before FRP	After FRP	Percent difference
1	1	6,0	5,6	7
	2	7,9	7,3	8
	3	7,0	6,3	10
	4	3,2	2,8	13
2	1	5,4	5,2	4
	2	7,7	7,1	8
	3	7,3	6,6	10
	4	3,7	3,3	11
3	1	3,1	3,0	3
	2	6,5	6,0	8
	3	8,6	7,7	10
	4	6,3	5,5	13
4	1	3,6	3,5	3
	2	6,9	6,3	9
	3	8,3	7,4	11
	4	5,6	5,0	11

Table 8: Girder deflections from the static test [46]

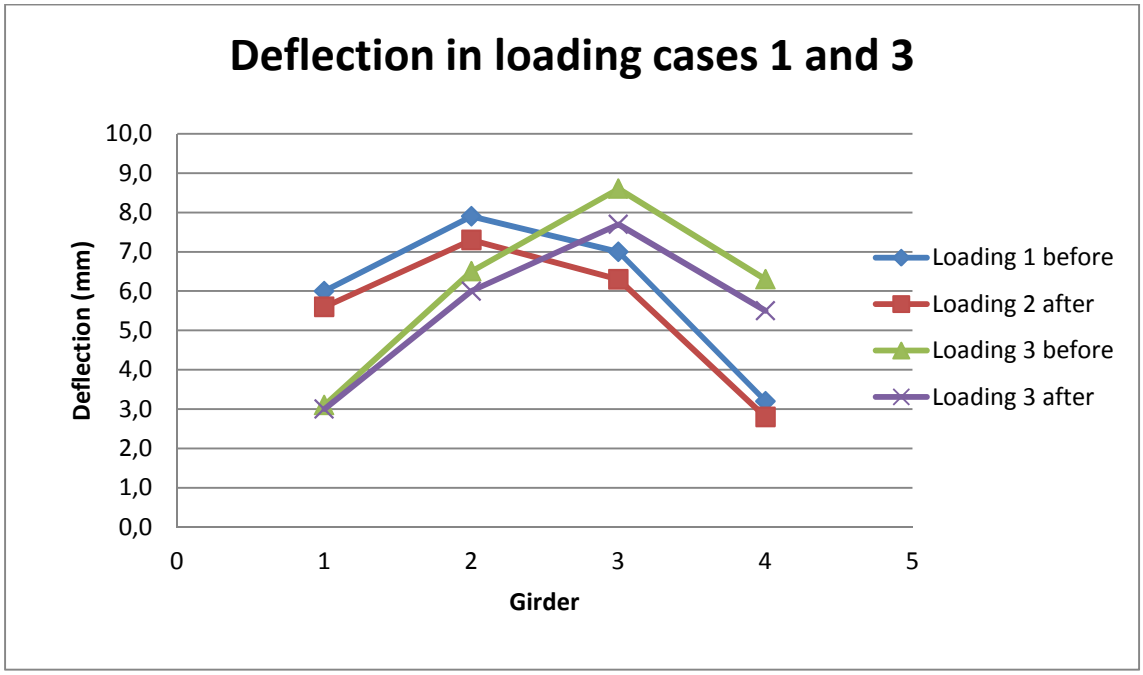

Fig. 19: Deflection from static tests in loading cases 1 and 3

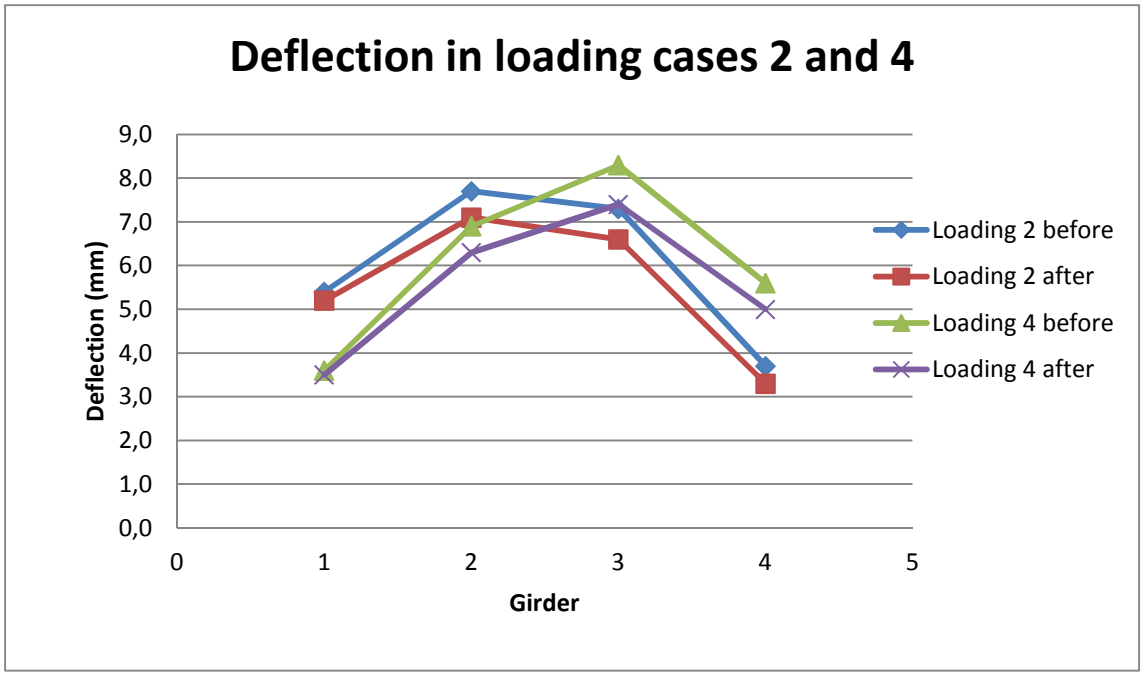

Fig. 20: Deflection from static test in loading cases 2 and 4

5.6.3 Dynamic test

A comparison of the dynamic load test results is presented in Table 9 and Table 10. The scatter in the peak dynamic measurements was greater than that for the static measurements. The largest deviations from the average values shown in Table 9 was 8 MPa for the stresses and the average value for deflections shown in Table 10 was 0.7 mm. Reductions of the peak rebar stresses range from 4% in girder 1 to 9% in girder 3. The average reduction for all four girders is 6%. The reductions in peak rebar stress follow the same pattern as that for the static test results, with the largest reduction occurring at an interior girder and the smallest reduction occurring at the exterior girder that did not have GFRP plates bonded to its sides.

The reduction in peak dynamic girder deflections shown in Table 10 ranges from 8% at girder 1 to 12% at girder 4. This largest reduction of 12% is consistent with the static test results. The smallest reduction in peak dynamic deflection is at girder 2 and not at the exterior girder 1, which is the trend of all the other test results. However, as shown in Table 10, the reductions of peak dynamic deflection at girders 1 and 2 are almost the same.

Girder	Before FRP	After FRP	Percent difference
1	83	80	4
2	95	91	4
3	110	100	9
4	84	78	7

Table 9: Comparison of Peak Rebar Stress from Dynamic Tests [46]

Girder	Before FRP	After FRP	Percent difference
1	6,3	5,8	8
2	9	8,1	7
3	9,4	8,4	11
4	6,6	5,8	12

Table 10: Comparison of Peak Girder Deflection from Dynamic Tests [46]

5.6.4 Effect of CFRP on rebar stresses

A comparison of average strains measured on the CFRP plates on the bottoms of girders 1, 2, 3 and 4 with the strains measured on the rebar of these girders is given in Table 11. Once again those strains are averages from the four repetitions of the loading.

Loading position	Girder	Rebar Strain (Microstrain)	CFRP Strain (Mpa)	Percent difference
1	1	384	368	-4
	2	423	429	1
	3	370	NA	NA
	4	170	178	5
2	1	361	341	-6
	2	412	416	1
	3	386	NA	NA
	4	205	215	5
3	1	187	177	-5
	2	332	336	1
	3	472	NA	NA
	4	370	388	5
4	1	222	211	-5
	2	346	350	1
	3	451	NA	NA
	4	331	345	4

Table 11: Strains measured on CFRP and rebar after repair [46]

No single measurement was more than 11 microstrains from the corresponding average listed. The results show that the CFRP strains vary from 6% less than the rebar strain to 5% more than the rebar strain. For each girder, the percent difference in the strains is very consistent for the various load positions. This consistency in the results, and the fact that the CFRP strains are approximately equal to the rebar strains, indicates that the CFRP plates were well bonded to the girders and were acting as an effective part of the cross section.

Classical flexural theory for a homogeneous beam cross section indicates that the CFRP strains should be approximately 18% larger than the rebar strains, since the CFRP is located farther from the neutral axis of bending. The deviation of the results presented in Table 11 from this 18% difference is believed to result from the variation in strains that naturally occur between the discrete flexural cracks of a reinforced concrete member. Presumably, if the measurements had been made truly at a flexural crack, the CFRP strains would be 18% higher than the rebar strains. The practical conclusion from the results of Table 11 is that the CFRP strains are approximately equal to the rebar strains, indicating that the CFRP plates appear to be effectively bonded to the girder.

Chapter 6: Conclusions

6.1 State of the art

FRP are formed for fibers and matrix. There are several types of fibers with different properties. The same happens with the matrix. These two components are selected and mixed in order to achieve the desired material.

Even thought there are a huge variety of FRP depending on the combination of the type of matrix and fibers, all the FRP laminates show low density compared to other conventional materials. This property produces a cost reduction in terms of handling and assembling and transportation. It also enables dead load savings, which is particularly important when retrofitting existing structures.

Most of the mechanical properties such as Poisson's ratio, the modulus of elasticity or the tensile strength depends on the orientation of the fibers and the fiber volume fraction. The design of the FRP laminate and its tailorability makes possible to design the desirable configuration of the composite in order to fulfill the requirements of the structure.

All this properties bring us to think that the best applications of FRP are in flexural or shear strengthening. Flexural strengthening or confining with FRP sheets are more usual than reinforced concrete beams externally strengthened by shear with FRP because models that explain reinforced concrete flexural strength are more developed and accepted whereas shear strengthening involves different contributions to the ultimate shear strength of the beam so shear strength behavior is not clear in reinforced concrete beams and FRP reinforced beams, what makes it difficult to reach an agreement to establish suitable design procedures.

6.2 Historical Review

It is not until the late 1980's when composites were introduced in the strengthening field. The first studies were performed in the lab and were with a small number of samples. Rapidly the quality of the studies performed increase and shows that FRP

materials bonded to the concrete surface of the bridges increase the flexural stiffness and reduce the crack's width.

In the middle of the nineties appeared the first field tests. Some of those were similar to the case of study done in this project, one example is the one done by Kobayashi et al. [19], which obtain a results quite similar to the ones that we have obtained in our case of study.

From the studies done can be concluded that one of the principal problems in flexural and shear strengthening of bridges is the premature debonding of composites. Another handicap is that regarding the shear strengthening there is not a unique criterion to calculate the shear capacity of the composite.

6.3 Application in bridge strengthening

FRP materials are becoming much more common in today's projects of bridge strengthening; it is because of its properties that have already been told before and because the advantages overcomes the disadvantages that this material presents in comparison with the conventional methods such as steel or concrete.

Economically, the cost of FRP is higher than the one of the steel or concrete, but this amount of money is balanced with the external cost that the other materials have, like the higher transportation and application costs.

The composites are also very useful because of their non-corrosive property that makes this material ideal for corrosive environments.

The only uncertainly regarding the use of FRP in bridge strengthening is its durability. Even that, it's been under investigation how FRP performs in long-term duration and it seems that in special GFRP will perform correctly a long term period.

6.4 Case of study

The results of the case of study to investigate the effects of externally bonded FRP composite plates on the structural performance of a reinforced concrete bridge were

presented. Based on the analysis of the static and dynamic load test data, the following conclusions are presented:

1. Application of FRP plates to concrete bridge girders was successfully performed using a simple and straightforward process. The only specialized equipment required, beyond normal bridge maintenance equipment and tools, was a vacuum pump for maintaining constant pressure to the plates during the curing period of the adhesive.

2. Application of the FRP plates was found to reduce the reinforcing bar stresses and vertical midspan deflections of the girders. Reductions of reinforcing bar stresses ranged from 4% to 12% for the static tests and from 4% to 9% for the dynamic tests. Girder deflection reductions ranged from 2% to 12% for the static tests, and from 7% to 12% for the dynamic tests. These reductions indicate that the FRP plates were behaving as an effective component of the girder cross sections.

3. A classical calculation of the cracked-section moment of inertia of the girder cross sections indicated that application of the FRP plates increased the girder moment of inertia by approximately 5%. Since the reductions in stresses and deflections resulting from the FRP repair were generally greater than 5%, more advanced cross sectional analysis procedures are necessary to accurately account for the beneficial effects of FRP repairs.

4. The reductions in reinforcing bar stresses and girder deflections were noticeably greater for the three girders repaired with GFRP side plates as compared to the one girder without the side plates. This suggests that lower cost GFRP side plates might be used to add stiffness to girder cross sections, while more expensive CFRP plates are attached to girder bottom surfaces to increase the load capacity.

Future Research

Now, the FRP are quite well known by civil engineers, and the using of this kind of material is increasing in the last years. However, some civil engineers are skeptical in its use because of the uncertainty of its long-term durability. And it is this uncertain durability one of the week points of the material and in which the future research have to focus on. One solution could be maintain the monitoring of the bridge during his life once the bridge is strengthened and continue analyzing the data in order to check how the bridge behave (strength in the laminate and in the reinforcement).

Moreover, there are some topics related to the externally bonded reinforcement that have been already studied in the literature which are not the object of this work, but which should be completed, like the premature debonding of the FRP sheets that could neglect its effect. Recently, a lot of studies have been done related with the debonding of the composite and we have learned a lot of how to predict it and prevent it. However, studies have to continue in order to improve and complete the conclusions obtained.

Another important point in which future research should focus on is the calculation of the shear capacity that the part studied can withstand. There are some existing models that can help to calculate this shear capacity, but in my opinion it is necessary to unify criteria in order to make this point much more clear.

References

[1] A. Fletcher, “Advanced composites – A profile of the International Advanced Composites – A profile of the International Advanced Composites Industry,” *Elsevier Sci.*, New York, 1994.

[2] C. Bakis, “Fiber-reinforced polymer composites for Construcion-State-of-the-Art Review,” *J. Compos. Constr.*, vol. 6, no. 2, pp. 73–87, 2002.

[3] Tuakta C., “Use of Fiber Reinforced Polymer Composite in Bridge Structures,” Thesis, *Massachusetts Inst. Technol.*, Massachusetts, 1980.

[4] W. Somboonsong and et al., “Ductile hybrid fiber reinforced plastic reinforcing bar for concrete structures: Design methodology.” *ACI Mater*, vol. 95, no. 6, pp. 655–666, 1998.

[5] M. Braestrup, “Footbrigde constructed from glass-fibre-reinforced profiles,” *Struct. Eng. Int.* , vol. 4, no. 9, 1999.

[6] L. C. Bank, “Composites for Construction - Structural Design with FRP Materials”, John Wiley & Sons, Inc., 2006

[7] R. Lopez-Anido and T. Naik, “Emerging Materials for Civil Infrastructure. State of the Art”, American Society of Civil Engineers, 2000

[8] S. Cabral-Fonseca, “Fiber Reinforced Polymer Composite Material used in Civil Engineering”, Technical Report, Duratinet, 2008

[9] Loewenstein, K. L., “The Manufacturing Technology of Continuous Glass Fibers”, Elsevier Scientific, New York, pp 2-94, 1973.

[10] Ilschner, B; et al. "Composite Materials". Ullmann's Encyclopedia of Industrial Chemistry, [Online], 2000.

[11] L. Hitex Insulation Co., “Texturized Glass Fiber Cloth.” [Online]. Available: www.glassfiber-fabric.cn/Texturized_Glass_Fiber_Cloth-6305.htm.

[12] CEB-FIB Task Group 9.3, “FRP reinforcement in RC structures”, Technical report, 2007.

[13] W.J. Cantwell, J Morton, "The impact resistance of composite materials – a review". Composites vol.22, no. 5, pp. 347–62, 1991.

[14] B. E. Gite and S. R. R. Margaj, “Carbon fibre as a recent material use in construction,” Sangamner, 2013.

[15] “Characteristics of Carbon Fibre, Latest Textile Industry Article, Properties of Carbon Fibers.,” Textile, textile industry articles, 2013. [Online]. Available: http://news-textileindustry.com/characteristics-of-carbon-fibre/.

[16] M. G. Dobb, D. J. Johnson, and B. P. Saville, “Structural aspects of high modulus aromatic polyamide fibres,” Philos. Trans. R. Soc. London Ser. A, vol. A294, no. 1411, pp. 483–485, 1980.

[17] S. J. A. L. Kadolph, Textiles. Upper Saddle River, NJ: Pearson Education, Inc., 2002.

[18] “Kevlar,” University of Texas, Austin School of Architecture. [Online]. Available: http://www.soa.utexas.edu/matlab/search/materials/details/t/item/id/8080.

[19] H. Zobel, “Mosty kompozytowe”, 50. Jubileuszowa Konferencja Naukowa KILiW PAN i KN PZITB, Krynica, 2004

[20] G. A. Jari Mori, “Estudio de la aplicabilidad de materiales compuestos al diseño de estructuras de contención de tierras y su interacción con el terreno, para su empleo en obras de infraestructura viaria,” Universidad Politécnica de Madrid, 2008.

[21] M. D. MacDonald and A. J. J. Calder, “Bonded steel plating for strengthening concrete structures,” *Int. J. Adhes*, vol. 2, no. 2, pp. 119–127, 1982.

[22] U. Meier, “Bridge repair with high performance composite materials,” *Mater. und Tech.*, vol. 4, pp. 125–128, 2005.

[23] P. A. Ritchie, “External Reinforcement of Concrete Beams Using Fiber Reinforced Plastic,” Leigh University, 1988.

[24] H. and E. M. R. Saadatmanesh, “Flexural strength of externally reinforced concrete beams,” in *Proc. First Materials Engineering Congress*, 1990, pp. 1152–1161.

[25] H. Meier, U. Kaiser, “Strengthening of structures with CFRP laminates.,” in *Advanced Composite Materials in Civil Engineering Structures*, 1991, pp. 224–232.

[26] M. R. Saadatmanesh, H. and Ehsani, “RC beams strengthened with GFRP Plates. 1: experimental study,” *J. Struct. Eng.*, vol. 117, no. 1, pp. 3417–3433, 1991.

[27] W. An, H. Saadatmanesh, and M. R. Ehsani, “RC beams strengthened with FRP plates. 2: Analysis and parametric study,” *J. Struct. Eng.*, vol. 117, no. 11, pp. 3434–3455, 1991.

[28] U. Meier, M. Deuring, H. Meier, and G. Schwegler, “Strengthening of structures with CFRP laminates: research and applications in Switzerland,” in *Proceedings of the 1st International Conference on Advanced Composite Materials in Bridges and Structures*, 1992, pp. 243–251.

[29] M. J. Chajes, T. A. Thomson, T. F. Januszka, and W. Finch, “Flexural strengthening of concrete beams using externally bonded composite materials,” *Constr. Build. Mater.*, vol. 8, no. 3, pp. 191–201, 1994.

[30] P. J. Heffernan, "Behavior of reinforced concrete beams strengthened with CFRP sheets," Thesis, Royal Military College of Canada, Kingston, 1994.

[31] N. Plevris and T. C. Triantafillou, "Time-dependent Behavior of RC Members Strengthened with FRP Laminates," *J. Struct. Eng.*, vol. 120, no. 3, pp. 1016–1042, 1994.

[32] R. Qu, "Theoretical analysis of reinforced and prestressed concrete bridge members strengthened with CFRP laminates," Thesis, Florida Atlantic University, 1994.

[33] R. C.A., J. D.M., T. J.W., and H. M.L., "Strengthening of reinforced concrete beams with externally bonded composite laminates," *ACI Struct. J.*, vol. 96, no. 3, pp. 212–220, 1994.

[34] N. Takeda, S. Ogihara, and A. Kobayashi, "Microscopic fatigue damage progress in CFRP cross-ply laminate composites," *Composites*, vol. 26, no. 12, pp. 859–868, 1995.

[35] M. J. Chajes, T. F. Januszka, D. R. Mertz, T. A. J. Thomson, and W. W. J. Finch, "Shear strengthening of reinforced concrete beams using externally applied composite fabrics," *ACI Struct. J.*, vol. 92, no. 3, pp. 295–303, 1995.

[36] A. Nanni, "Concrete repair with externally bonded FRP reinforcement," *Concr. J.*, vol. 17, no. 6, pp. 22–26, 1995.

[37] M. A. Erki and U. Meier, "Impact Loading of Concrete Beams Externally Strengthened with CFRP Laminates" J. Compos. Constr., 3(3), pp. 117–124. 1999

[38] K.T. Lau et al, "Mechanics of bonds in an FRP bonded concrete beam", Source of the Document Composites Part B: Engineering, 32 (6), pp. 491-502, 2001

[39] V. Karbhari, J. Chin, D. Hunston, B. Benmokrane, T. Juska, R. Morgan, J. Lesko, U. Sorathia, and D. Reynaud, "Durability Gap Analysis for Fiber-Reinforced Polymer Composites in Civil Infrastructure", J. Compos. Constr., 7(3), pp. 238–247, 2003

[40] K. Tanand and M. Saha, "Long-Term Deflections of Reinforced Concrete Beams Externally Bonded with FRP System.", J. Compos. Constr., 10(6), pp. 474–482, 2006

[41] M.R. Aram, "Debonding failure modes of flexural FRP-strengthened RC beams", Source of the DocumentComposites Part B: Engineering, 39 (5), pp. 826-841, 2009

[42] A. Mofidi and O. Chaallal, "Shear Strengthening of RC Beams with Externally Bonded FRP Composites: Effect of Strip-Width-to-Strip-Spacing Ratio." J. Compos. Constr., 15(5), pp. 732–742, 2011

[43] I.A Bukarhi, "Shear Strengthening of Short Span Reinforced Concrete Beams with CFRP Sheets", Arabian Journal for Science and Engineering , 38(3), pp 523-536, 2013

[44] S. Setunge, "Review of strengthening techniques using externally bonded fiber reinforced polymer composites," Brisbane, 2002.

[45] J. G. Dai, T. Ueda, Y. Sato, and T. Ito, “Flexural strengthening of RC beams using externally bonded FRP sheets through flexible adhesive bonding,” *Proc. Int. Symp. Bond Behav. FRP Struct.*, pp 205-213, 2005.

[46] T. C. Triantafillou, S. Matthys, K. Audenaert, G. Balazs, and M. Blaschko, *Externally bonded FRP reinforcement for RC structures*. Switzerland, pp. 12–18, 2001.

[47] B. J. Herzog, “Characterization of the void content of Fiber Reiinforced Polymer (FRP) composite materials fabricated by the Composite Pressure Resin Infusion System (COMPRIS),” University of Maine, 2004.

[48] W. Prachasaree and P. Sookmanee, “Structural performance of light weight multicellular FRP composite bridge deck using finite element analysis,” *J. Wuhan Univ. Technol. Sci. Ed*, vol. 27, no. 5, pp. 939–943, 2012.

[49] M. Kupke, H. P. Wentzel, and K. Schulte, “Electrically conductive glass fibre reinforced epoxy resin,” *Mater. Res. Innov.*, vol. 2, no. 3, pp. 164–169, 1998.

[50] U.S. Department of Transportation, “Current Practices in FRP Composites Technology,” 2013.

[51] N. Benichou, V.K.R. Kodur, M.F. Green and L.A. Bisby, “Fire Performance of Fibre-Reinforced Polymer Systems Used for the Repair of Concrete Buildings”, Construction technlogy update, no. 75, 2010

[52] Y. Sonobe, H. Fukuyama, T. Okamoto, and N. Kani, “Design guidelines of FRP reinforced concrete building structures,” *J. Compos. Constr.*, vol. 1, no. 3, pp. 90–115, 1997.

[53] J. W. Tedesco, J.M Stallings, “Rehabilitation of a reinforced concrete bridge using FRP laminates, Final Report”, Auburn University Highway Research Center, Alabama, 1998

[54] AASHTO, “Standard Specifications for Highway Bridges. American Association of State Highway and Transportation Officials”, Sixteenth Edition, 1996

[55] ACI 440, “Guide for the design and construction of externally boned FRP systems for strengthening concrete structures, Revised 2008