Design of a Supersonic wind tunnel 23/Sep/2011

Introduction

- Objectives:

1. Design a supersonic wind tunnel.
    - Previous design of the tunnel
    - Structural design of the tunnel
    - Implementation of the tunnel
    - Construction of the model
    - Conditioning of the inertial platform
    - Conditioning of the scale
    - Performance improvement / Simulations in fluent

2. Produce a poster for the school.
    - Format A3

- Application:

- Formula one
- Aircraft
- Rockets

- Constraints:

- Time: 4 Human resources for 4 weeks
- Power -> 300kW
- Size -> 0,1m
- Technology????
- Cost -> 1000000 €
- Liquid? Air + N2

- Performances / Requirements:

- M 0,8 speed
- M<1,2 Maximum achievable speed
- Turbulence>0,1%

- Planning:

- **Preliminary design**
- **Study/Simulations**
- **Design**
- **Poster**

The first step to be done is to get aware of what a windtunnel is and how it works. This will enable us to be more aware of the existing technologies and will lead us to brainstorm over the different imaginable solutions.

Result week N° 36 / 2011

A supersonic wind tunnel is a wind tunnel that produces supersonic speeds (1.2<M<5) The Mach number and flow are determined by the nozzle geometry. The Reynolds number is varied changing the density level (pressure in the settling chamber). Therefore a high-pressure ratio is required (for a supersonic regime at M=4, this ratio is of the order of 10). Apart from that, condensation or liquefaction can occur. This means that a supersonic wind tunnel needs a drying or a pre-heating facility. A supersonic wind tunnel has a large power demand leading to only intermittent operation.

Source:http://en.wikipedia.org/wiki/Supersonic_wind_tunnel

Different existing technologies:

- Closed circuit
- Open circuit
- Blowdown
- Blower tunnel
- Explosive tunnel

1. **Closed Circuit Wind Tunnel**

Closed-circuit system can be used to achieve a wide range of Mach numbers. They are designed so that the air that passes through the tunnel does not exhaust to the atmosphere; instead, it enters through a return passage and is cycled through the test section repeatedly.

This type of wind tunnel is beneficial because the operator has more control of the conditions in the test section than with other approaches since the tunnel is cut off from the environmental conditions once running. In comparison to other wind tunnel types, continuous wind tunnels have superior flow quality due to the different facets of the tunnel's construction.

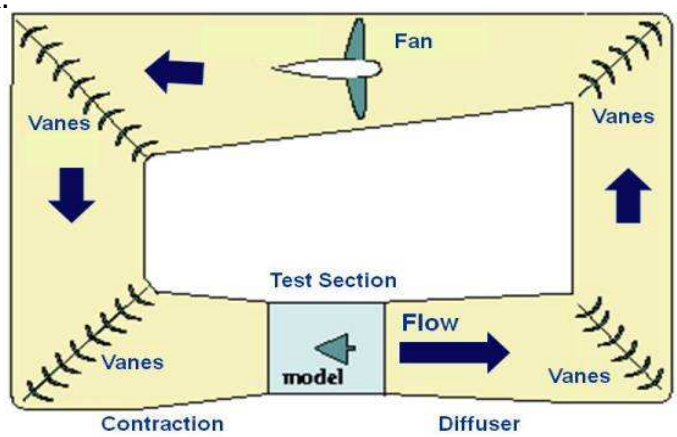

Source: Design and Construction of a Supersonic Wind Tunnel / Prof. John Blandino, MQP Advisor and Prof. Simon Evans, MQP Co-advisor

2. Open Circuit Wind Tunnel

Open circuit wind tunnels do not directly re-circulate air. Rather, air is drawn in from the laboratory environment, passes through the test section and is returned back to the lab through the tunnel exhaust.

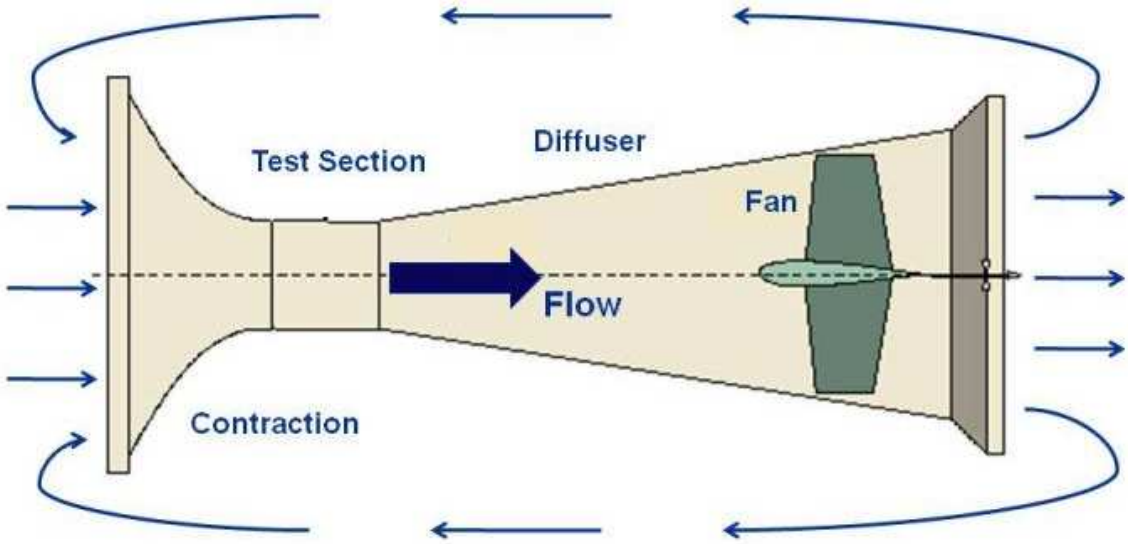

Source: http://www.grc.nasa.gov/WWW/k-12/airplane/tunoret.html

3. Blowdown Wind Tunnel

Blowdown tunnels use the difference between a pressurized tank and the atmosphere to attain supersonic speeds. They are designed to discharge to the atmosphere, so the pressure in the tank is greater than that of the environment in order to a create flow from the tank out of the tunnel.

In one configuration, known as a « closed » blowdown tunnel, two pressure chambers are connected to either side of the tunnel. In this configuration, one chamber would contain a high-pressure gas and the other chamber would be at a very low pressure.

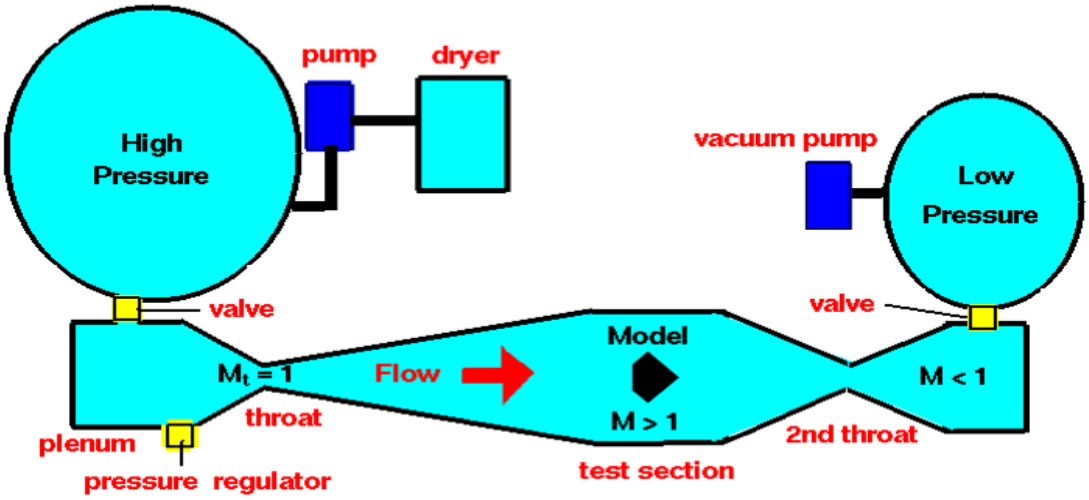

Source: http://www.grc.nasa.gov/WWW/k-12/airplane/tunblow.html

4. Blower Wind Tunnel

Blower Wind Tunnel is an open Circuit Tunnel with a centrifugal compressor (blower) at entry instead of a fan at the end like a classic Open Circuit.

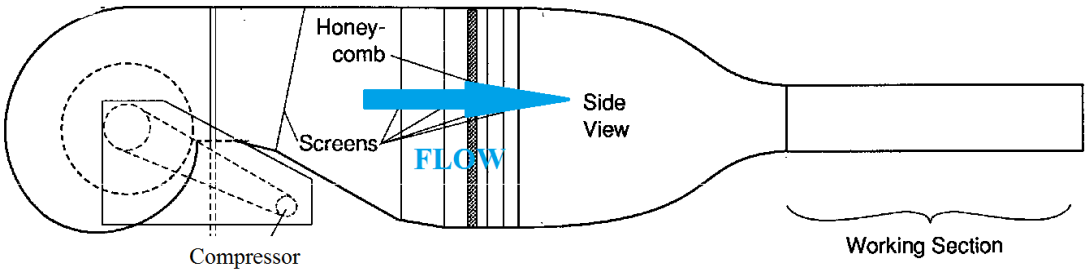

Source: http://www-htgl.stanford.edu/bradshaw/tunnel/fig/Fig2.html

5. Explosive Wind Tunnel

The idea is to put an explosive charge in the entry of a big pipe in order to create a flow.

Explosive Wind Tunnel was imagined by Mr Tristancho (Tutor).

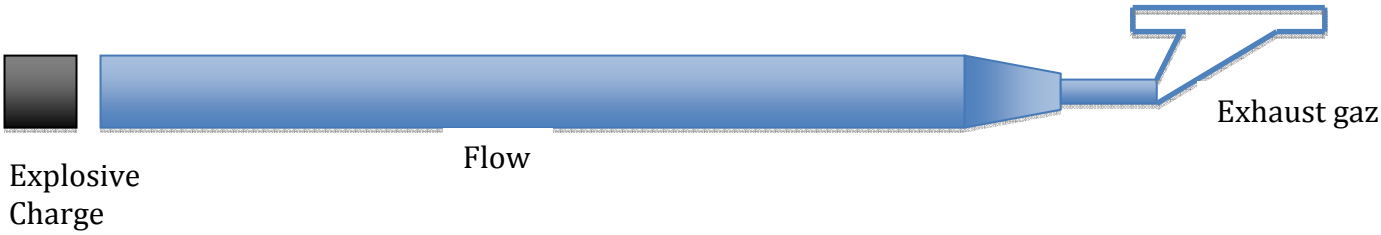

State of the Art

Following our research we adjusted our requirements in order to target our study.

- Application:

- Rockets

- Constraints:

- Time: 4 Human resources for 4 weeks
- Power -> 300kW
- Size -> 0,1m
- Cost -> 1000000 €
- Liquid? Air / N2

- Performances / Requirements:

- M<1,2 Maximum achievable speed
- Turbulence>0,1%

	Open curcuit	Closed circuit	Blow down	Blower tunnel	Explosive tunnel
Testing time	important	important	limited	important	short
Flow characteristic	constant	constant	constant	constant	turbulent
Speed range	minimal: M1,5	define by customer	define by customer	define by customer	?
Test chamber size	-	-	-	-	-
Avantages / Disavantages	+ low cost construction + good visualization of the test + no accumulation of exhaust products - poor flow quality - high operating cost - noisy	+ good flow quality + low operating cost + quiet + very low level of turbulence - high construction cost - accumulation of exhaust products - hotter running - need a cooling system	+ low construction and operation cost + start easily + superior visualization - limited testing time - noisy - high pressure - accumulation of exhaust products	+ low cost construction + good visualization of the test + no accumulation of exhaust products - poor flow quality - high operating cost - noisy	- very short testing time - all the regime in one shot - Accumulation of exhaust products - measure with sensor accurate

We made the choice to supress the two architectures, which were matching the less with our requirements, in order to push the study deeper with the remaining ones.

Consequently, the following step is first to study the way the selected architectures work, and then to compare the technical data of three existing and similar (same characteristics: L, V, N) tunnels.

	HM112	AF302	AF300
Type	Supersonic Open	Supersonic Open	Supersonic Closed
Reference	GUNT HAMBERG	TecQuipment	TecQuipment
Speed Range (Mach)	1.4 to 1.8	up to 1.8	up to 1.8
Testing Section (mm)	100 x 25	102 x 25	100 x 25
Size l x w x h (mm)	3500 x 810 x 1715	5800 x 1600 x 1500	3000 x 2000 x 800
Weight (kg)	1550	2000	-
Testing duration	-	-	-
Reynolds number	-	-	-
Sound Level (db)	84	90	100
Operating temperature range	40% humidity 25°C	5°C to 40°C	5°C to 40°C
Power consumption n(KW)	55	100	-
Connection	400 v 3-50Hz	400 v 3-50Hz	400 v 3-50Hz
Link	http://www.sedisuccio.com/images/products/HM112/TX1720/Tecnolab%20X%20TX1720.pdf	http://www.tecquipment.com/Datasheets/AF302_306.pdf	http://www-k-g.fluid.tu-braunschweig.de/Tg/Tg5-g2.html

As a matter of fact, after studying and using an open source program simulation about the launch of the rocket in the space, the program simulation showed that we have to know the speed, the density and the pressure of the flow inside the rocket instead of outside like it was planned.The simulation values are very different from the beginning. See the comparison between the values of our first study and the new ones.

Speed =	1.2 Mach	24 Mach
Density =	?Kg/m3	5kg/m3
P=	?Atm	33 Atm (inside the combustible chamber)
Experiment-Time=	Not define	20 s

Like our previous analysis and studies show that it is not possible to make a wind tunnel, which can be strong enough to measure the flow inside the rocket, we had to reconsider our whole study.

Consequently, a decision needed to be taken between two options:

1. Either change the meaning of the actual supersonic windtunnel and think about how to measure these data in real flying conditions
2. Or change the actual applications while keeping the traditional concept of windtunnels

Both solutions were interesting but difficult. For Mr Tristancho, it doesn't matter which solution we choose because he needs although a supersonic wind tunnel than to know the characteristic of the flow inside the rocket.

So before taking a decision, we thought about the two ideas. The first consist to imagine and design a system to make the acquisition of all the values that we need about the flow inside the rocket. The main difficulties is to design a complete "real test bench" directly on the rocket. So we have to find the micro sensor, to fix them on the rock without affect its weight or its aerodynamic skills...
And the other possibility, consist to keep our research and design a supersonic wind tunnel for some future application.

We made the decision to work on the first direction, as we consider that it is a more creative and interesting one. Moreover we are more interesting to work on the rocket which is destiny to be launch on the space than on the wind tunnel.
In the meantime, part of the team is already working on dimensioning this rocket, so they can provide us a strong expertise.
What else, we will have to develop a great knowledge about sensors and to work with a lot of extremes conditions.

Creating such a "wind tunnel" needs to take another approach of the whole subject!

Here are some preliminary questions:

1. What are we expecting from this very special wind tunnel?
2. What will be the info we want to get?
3. With what existing elements (sensors) can we get the data?
4. How are we going to recuperate these data?
5. How to work in an efficient manner in order to make the solution sold able?
6. How to design a program, which will be able to analyse and treat the data?

Let's try to answer these questions with our actual knowledge and imagination:

1. What are we expecting from this very special wind tunnel?

First of all, this wind tunnel needs to meet our specific technological requirements but also other specifications like weight, price and quality.
Let's remind our technical specificities:

- The rocket will be destroyed after its flight.
- The rocket should be very light (Google contest).
- The temperature and pressure will be very high.
- The flow is a supersonic one (Mach 25).

2. What will be the info we want to get?

This question is the most important: we have to think in the opposite way. In fact, we do not want to check the simulated data, we want to establish models with the results we will get. The purpose is to verify that our simulation matches with the experiment!
We want to know exactly at each moment and at every point of the rocket the exact thermo and aero dynamical data!
That is to say: pressure, temperature, and speed …
A few other questions appear at this point: do we need, for instance, to install sensors everywhere in the rocket or is there any manner to know a data in a specific point without having measured it?

3. With what existing elements (sensors) can we get the data?

We have to make a state of art of the existing range, which could meet our very specific requirement! This is a big work!

4. How are we going to recuperate these data?

As the rocket will be destroyed, we have to find a way to send the info back to us before disintegration. A telecom engineer could help us in setting the solution

5. How to work in an efficient manner in order to make the solution sold able?

One of the purposes of the lab is to make the whole solution a business! So we have to work in a way to be able to adapt the system to other existing, and manufactured ones.

6. How to design a program, which will be able to analyse and treat the data?

When selling the product, we have to provide the customer a support on which he will be able to follow the experiments!

Flux Diagram

- First Drawing:

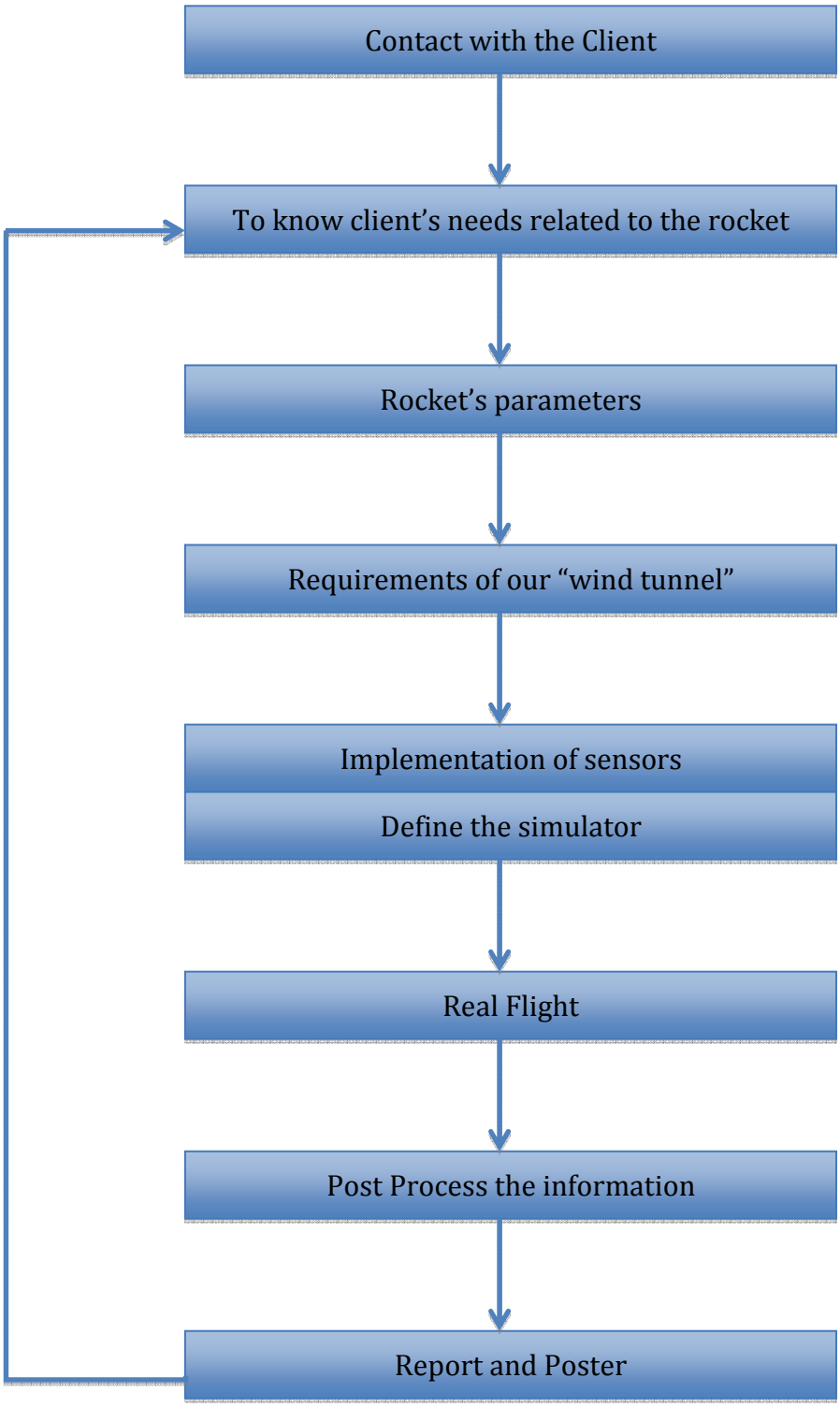

- Final Drawing:

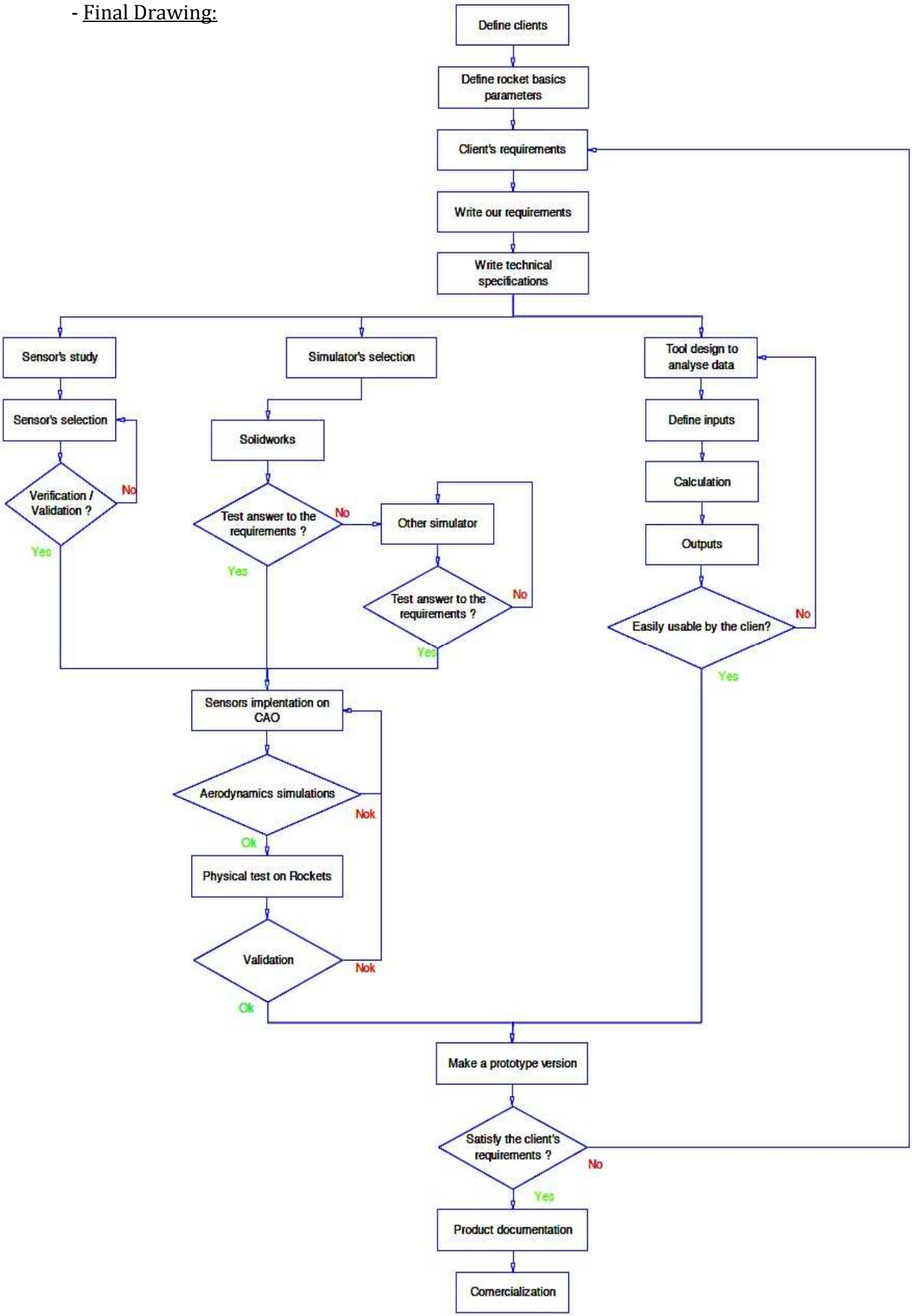

-Tasks Explanations:

Define Clients:

This part of our work will be to study markets.
We have to make a research about the rocket manufacturers in order to choice our potential costumers

Define Rocket basic parameters:

This part is dedicated to make a search about basic parameters of the rockets chosen before. It will be the size, the speed, the destination, the type of rockets, the type of combustion etc

Client's requirements:

The purpose of the client is to improve the engine's efficiency

- To give indicators about temperature
- To give indicators about pressure
- To give indicators about dynamic flow
- To give indicators about the speed

Write the Requirements Document:

The best practice requires that all requirements should be unique, unitary, and testable. So, we have to check the granularity and testability of each requirement.

The requirements Document must include our clients' requirements. As we don't know yet exactly their needs, we make the supposition that they would like to have a view on the flow which is established in the noozle.
Consequently, even if we don't have yet designed the technical part of our product (best position to implement our sensors, which sensors to use,…), we make the previous supposition.

Technical Specification:

In this part we have to satisfy all requirements with a technical solution.
Currently Technical Specification is split into 3 parts:

1. Sensors study
2. Simulator study
3. Software to analyse data

Details of the technical specification:

1. ***Sensors study:***

- Study: To make a research about sensors

- Selection:We need to analyse all existing sensors able to meet our specifications in order to choose the right ones

- Validation:We will study in deep all parameters of each sensor chosen before.

2. ***Simulator study:***

- Solid Works: We should try to make our simulation thanks to Solid Works

- Other:If Solid Works does not satisfy our requirements we have to choose or design other software

3. ***Software to analyse data:***

- Define Inputs:The inputs will be defined by the requirements document.

Let see with specialists (of flow simulation) if it is enough to check the inputs in only some points and, with the thermo dynamical laws, to expand the results to the whole structure.

- Examples:
  - -Temperature (in different points of the engine)
  - -Pressure (in different points of the engine)
  - -Turbulence
  - -Density
  - -Chemical characteristics

- Outputs:The outputs will be defined by the client's requirements. We have to think about the user interface and the indicators. We also have to think about the precision they require!

This will have a huge impact on the choice of our sensors.

The Software should be easy to use and the indicators should be easy to analyse.

Outputs should be conceited in a way that our customers (engineers) have directly the info they are looking for. The best way to do this is to present graphs and to create a solution where the customers can go deeper in their search (for instance, when you put your mouse's cursor on a special part of the graph, they should be able to see a very precise number).

Sensors Implantation on CAO:

In this part we have to think about the best implantation of our sensors on the rocket.

Simulation:

Thanks to this simulation we can try to check the behaviour of the rocket with our sensors

Product deliverables:

-Business Plan
-A requirements Document
-A design Document
-Technical Specification
-Validation Plan
-Report
-Summary Poster

PRELIMINARY WORK BEFORE STARTING THE STATE OF ART

The following pages are a description of the different types of rocket engines, description we will need to establish our target and its expectancies!
Here is a basic course, extracted from Wikipedia, which is supposed to lead us in our choices.

A rocket engine, or simply "rocket", is a jet engine that uses only propellant mass for forming its high speed propulsive jet. Rocket engines are reaction engines and obtain thrust in accordance with Newton's third law. Since they need no external material to form their jet, rocket engines can be used for spacecraft propulsion as well as terrestrial uses, such as missiles. Most rocket engines are internal combustion engines, although non combusting forms also exist.

Rocket engines as a group have the highest exhaust velocities, are by far the lightest, but are the least propellant efficient of all types of jet engines.

<u>There are mainly 6 types of rocket engines:</u>

-Chemical rockets are rockets powered by exothermic chemical reactions of the propellant.

-Rocket motor (or solid-propellant rocket motor) is a synonymous term with rocket engine that usually refers to solid rocket engines.

-Liquid rockets (or liquid-propellant rocket engine) use one or more liquid propellants that are held in tanks prior to burning.

-Hybrid rockets have a solid propellant in the combustion chamber and a second liquid or gas propellant is added to permit it to burn.

-Thermal rockets are rockets where the propellant is inert, but is heated by a power source such as solar or nuclear power or beamed energy.

-Monopropellant rockets are rockets where the propellant is one chemical, typically hi-test (85 %+) hydrogen peroxide, which is decomposed by a catalyst producing steam and oxygen. There is no flame.

For our study we choose only the forth first as they represent the majority of engine types.

- Solid Rocket Motor:

A simple solid rocket motor consists of a casing, nozzle, grain (propellant charge), and igniter.

The grain behaves like a solid mass, burning in a predictable fashion and producing exhaust gases. The nozzle dimensions are calculated to maintain a design chamber pressure, while producing thrust from the exhaust gases.

Once ignited, a simple solid rocket motor cannot be shut off, because it contains all the ingredients necessary for combustion within the chamber in which they are burned. More advanced solid rocket motors can not only be throttled but also be extinguished and then re-ignited by controlling the nozzle geometry or through the use of vent ports. Also, pulsed rocket motors that burn in segments and that can be ignited upon command are available.

Modern designs may also include a steerable nozzle for guidance, avionics, recovery hardware (parachutes), self-destruct mechanisms, APUs, controllable tactical motors, controllable divert and attitude control motors, and thermal management materials.

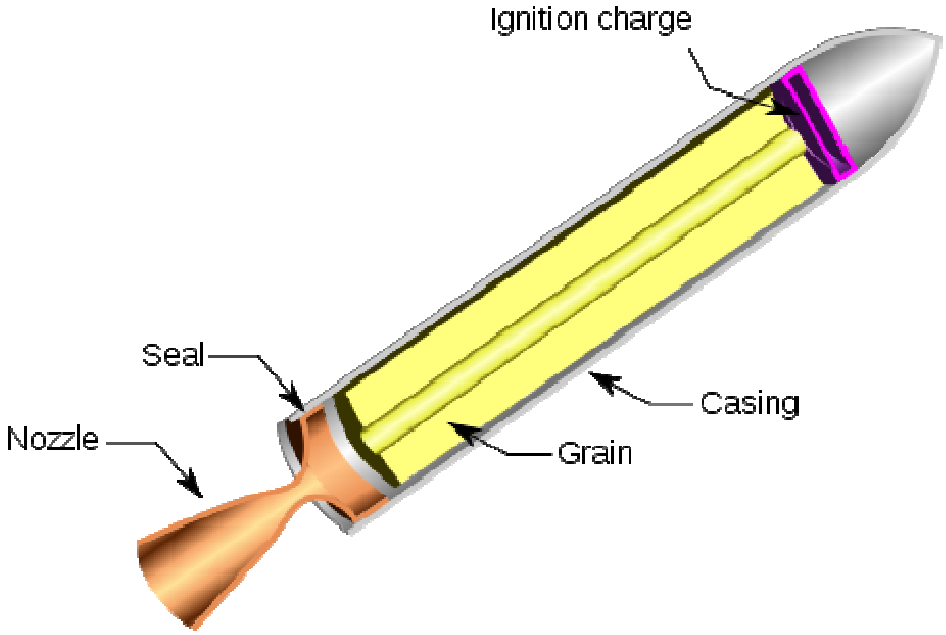

Source :http://commons.wikimedia.org/wiki/Image:SolidRocketMotor.png

- Liquid-propellant rocket:

A liquid rocket is a rocket with an engine that uses propellants in liquid form. Liquids are desirable because their reasonably high density allows the volume of the propellant tanks to be relatively low, and it is possible to use lightweight pumps to pump the propellant from the tanks into the engines, which means that the propellants can be kept under low pressure. This permits the use of low mass propellant tanks, permitting a high mass ratio for the rocket.

Liquid rockets have been built as monopropellant rockets using a single type of propellant, bipropellant rockets using two types of propellant, or more exotic tripropellant rockets using three types of propellant. Bipropellant liquid rockets generally use one liquid fuel and one liquid oxidizer, such as liquid hydrogen or a hydrocarbon fuel such as RP-1, and liquid oxygen. This example also shows that liquid-propellant rockets sometimes use cryogenic rocket engines, where fuel or oxidizer are gases liquefied at very low temperatures.
Liquid propellants are also sometimes used in hybrid rockets, in which they are combined with a solid or gaseous propellant.

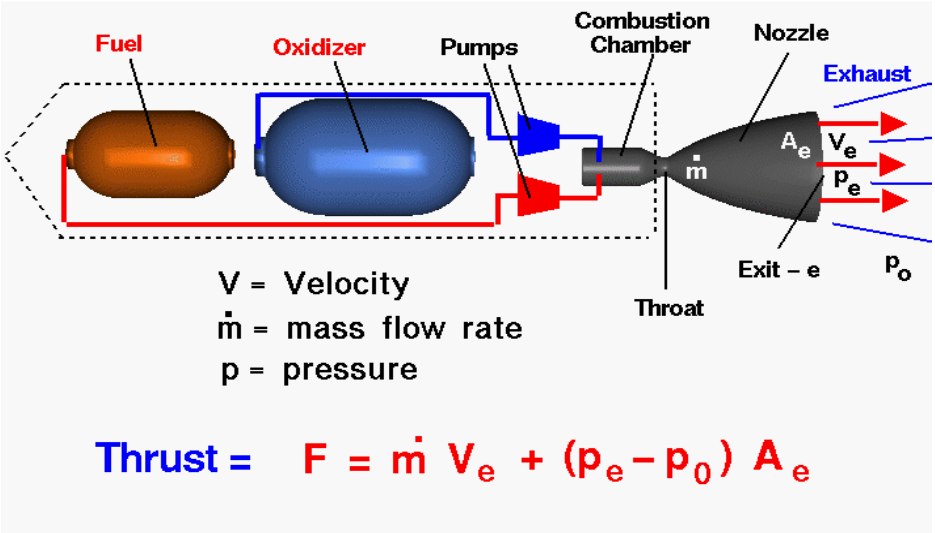

Source: http://en.wikipedia.org/wiki/File:NASA_bipropellant_Lrockth.png

- Hybrid Rockets:

In its simplest form a hybrid rocket consists of a pressure vessel (tank) containing the liquid propellant, the combustion chamber containing the solid propellant, and a valve isolating the two. When thrust is desired, a suitable ignition source is introduced in the combustion chamber and the valve is opened. The liquid propellant (or gas) flows into the combustion chamber where it is vaporized and then reacted with the solid propellant. Combustion occurs in a boundary layer diffusion flame adjacent to the surface of the solid propellant.
Generally the liquid propellant is the oxidizer and the solid propellant is the fuel because solid oxidizers are problematic and lower performing than liquid oxidizers. Furthermore, using a solid fuel such as HTPB or paraffin allows for the incorporation of high-energy fuel additives such as aluminium, lithium, or metal hydrides.
Common oxidizers include gaseous or liquid oxygen or nitrous oxide. Common fuels include polymers such as polyethylene, cross-linked rubber such as HTPB or liquefying fuels such as paraffin.

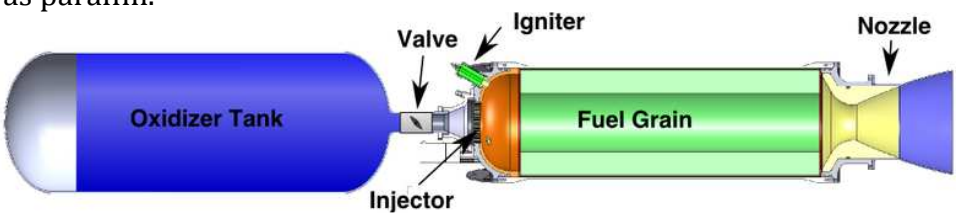

Source: http://en.wikipedia.org/wiki/File:Hybrids_big.png

EXPLORING AND COMPARING THE DIFFERENT ENGINE TYPES IN ASTRONAUTIX.COM'S DATABASE

After having known a little more about engines, the purpose for us was to get aware of what could be the most interesting work to be done among these engines.
Consequently, we have to choose those engines which could match with our very first suppositions (flow in the engine,…) and study them deeper.
This work will take place tomorrow as the time appeared to be short for today (Thursday the 15th of sept).

Here are a few examples of existing engines.

Liquid

- Rockets:

-Aerojet 62

Propellant: N2O4/MMH
Status: In Production.

Characteristics:
- Mixture Ratio(O/F): 1.65.
- Area Ratio: 150.
- Thrust to Weight Ratio: 5.59.
- Unfuelled mass: 1.13 kg (2.49 lb).
- Thrust: 62 N (13 lbf).
- Specific impulse: 287 s.

-Viking 4B

Propellant: N2O4/UDMH 805 kN.
Used on Ariane 4. First flight 1984.

Characteristics:
- Thrust (sl): 571.100 kN
- Thrust (sl): 58,237 kgf
- Chamber Pressure: 58.50 bar
- Area Ratio: 30.8
- Thrust to Weight Ratio: 99.379
- Oxidizer to Fuel Ratio: 1.7
- Coefficient of Thrust vacuum: 1.844
- Coefficient of Thrust sea level: 1.317
- Unfuelled mass: 850 kg
- Height: 3.51 m
- Diameter: 2.60 m
- Thrust: 805.00 kN
- Specific impulse: 296 s

- Specific impulse sea level: 210 s
- Burn time: 125 s
- Number: 133

-RD-0202

Propellant: N2O4/UDMH
Application: UR-200 stage 1

Characteristics:
- Chambers: 4. Engine: 1,525 kg
- Area Ratio: 29.8
- Thrust to Weight Ratio: 149.5
- Oxidizer to Fuel Ratio: 2.6
- Unfuelled mass: 1,525 kg
- Height: 1.80 m
- Thrust: 2,236.00 kN
- Specific impulse: 311 s
- Specific impulse sea level: 278 s
- Burn time: 136 s
- First Launch: 1961-64
- Number: 9

-DST-200

Propellant: N2O4/UDMH
Status: In Production

Characteristics:
- Bi-propellant hypergolic (self-igniting) engine, pressure-fed. 10,000 ignitions
- Engine: 1.30 kg
- Chamber Pressure: 15.00 bars
- Area Ratio: 43
- Thrust to Weight Ratio: 15.38
- Oxidizer to Fuel Ratio: 1.85.
- Unfuelled mass: 1.30 kg
- Thrust: 200 N
- Specific impulse: 280 s
- Burn time: 5,000 s.

-TR-201

Propellant: N2O4/Aerozine-50 rocket engine
Apollo lunar module ascent stage engines
Surplus engines used on Delta P stage
First flight 1972

Characteristics:
- Chamber Pressure: 7.00 bar
- Area Ratio: 46

- Thrust to Weight Ratio: 31.4338235294118
- Oxidizer to Fuel Ratio: 1.59
- Coefficient of Thrust vacuum: 1.45719168532336.
- Unfuelled mass: 113 kg
- Height: 2.27 m
- Diameter: 1.38 m
- Thrust: 41.90 kN
- Specific impulse: 301 s
- Burn time: 322 s
- Number: 90

- Propellants

-N2O4/UDMH

Nitrogen tetroxide became the storable liquid propellant of choice from the late 1950's. Unsymmetrical Dimethylhydrazine ((CH3)2NNH2) became the storable liquid fuel of choice by the mid-1950's. Development of UDMH in the Soviet Union began in 1949. It is used in virtually all storable liquid rocket engines except for some orbital manoeuvring engines in the United States, where MMH has been preferred due to a slightly higher density and performance.

Nitrogen tetroxide consists principally of the tetroxide in equilibrium with a small amount of nitrogen dioxide (NO2). The purified grade contains less than 0.1 per cent water. N2O4 is a very reactive, toxic oxidiser. It is non-flammable with air; however, it will inflame combustible materials. It is not sensitive to mechanical shock, heat, or detonation. Nitrogen dioxide is made by the catalytic oxidation of ammonia; steam is used as a diluent to reduce the combustion temperature.

Oxidizer: N2O4. Fuel: UDMH. Propellant Formulation: N2O4/UDMH. Optimum Oxidizer to Fuel Ratio: 2.61. Temperature of Combustion: 3,415 deg K. Ratio of Specific Heats: 1.25. Density: 1.18 g/cc. Characteristic velocity c: 1,720 m/s (5,640 ft/sec). Isp Shifting: 285 sec. Isp Frozen: 273 sec. Oxidizer Density: 1.450 g/cc. Oxidizer Freezing Point: -11 deg C. Oxidizer Boiling Point: 21 deg C. Fuel Density: 0.793 g/cc. Fuel Freezing Point: -57 deg C. Fuel Boiling Point: 63 deg C.

Location: 1720.
Specific impulse: 333 s.
Specific impulse sea level: 285 s.

-N2O4/MMH

Monomethylhydrazine (MMH) is 95+ per cent pure, while the normally expected impurities are methylamine and water. MMH is a clear, water-white hygroscopic liquid which tends to turn yellow upon exposure to air. MMH is a toxic, volatile liquid which will react with carbon dioxide and oxygen. MMH has the typical sharp ammoniacal or fishy odour of amines. It is completely miscible in all proportions with hydrazine, water, and low molecular-weight alcohols. MMH is not sensitive to impact or friction; it is more stable than hydrazine on mild heating and similar to hydrazine in sensitivity to catalytic oxidation.

Oxidizer: N2O4. Fuel: MMH. Propellant Formulation: N2O4/MMH. Optimum Oxidizer to Fuel Ratio: 2.16. Temperature of Combustion: 3,385 deg K. Density: 1.20 g/cc. Oxidizer Density: 1.450 g/cc. Oxidizer Freezing Point: -11 deg C. Oxidizer Boiling Point: 21 deg C. Fuel Density: 0.880 g/cc. Fuel Freezing Point: -52 deg C. Fuel Boiling Point: 87 deg C.

Specific impulse: 336 s.
Specific impulse sea level: 288 s.

-N2O4/Aerozine-50

Oxidizer: N2O4. Fuel: Aerozine-50. Oxidizer Density: 1.450 g/cc. Oxidizer Freezing Point: -11 deg C. Oxidizer Boiling Point: 21 deg C. Fuel Density: 0.903 g/cc. Fuel Freezing Point: -7 deg C. Fuel Boiling Point: 70 deg C.

Solid

Solid propellants have the fuel and oxidiser embedded in a rubbery matrix. They were developed to a high degree of perfection in the United States in the 1950's and 1960's. In Russia, development was slower, due to a lack of technical leadership in the area and rail handling problems. Solid propellants have the fuel and oxidiser embedded in a rubbery matrix. They were developed to a high degree of perfection in the United States in the 1950's and 1960's. In Russia, development was slower, due to a lack of technical leadership in the area and rail handling problems.
The disadvantages of solid propellants include:

- Slightly higher empty mass for the rocket stage
- Slightly lower performance than storable liquid propellants

- Transportability issues: Solid propellants are cast into the motor in the factory, unlike liquid fuel rockets, which can be fuelled at the launch pad. This means they have to either be:
  1) Limited in size to be transportable (as for the Delta and Ariane strap-on motors);
  2) Cast in segments, with the segments assembled at the launch base (as for Titan and the Space Shuttle);
  3) Cast in a factory at the launch site (actually done for large test motors intended for Saturn V upgrades).

- Once ignited, they cannot be easily shut down or throttled. Thereafter they have to be pre-cast or milled out for a specific mission.
- Nearly always-catastrophic results in the event of a failure

Advantages of solid rocket motors, many of which make them ideal for military applications:

- High density and low volume
- Nearly indefinite storage life
- Instant ignition without fuelling operations
- High reliability

-2.5KS18000

Multiple-source solid rocket engine. 80 kN. Typical ideal dV=259 m/s; gravity and drag losses = 25 m/s.
- *Gross mass*: 272 kg (599 lb). *Unfuelled mass*: 153 kg (337 lb). *Height*: 1.80 m (5.90 ft). *Diameter*: 0.33 m (1.08 ft). *Thrust*: 80.00 kN (17,984 lbf). *Burn time*: 2.50 s.

Associated Stage
-Solid rocket stage. 80.00 kN thrust.
-Mass 300 kg
-*Status*: Retired 1970.
-*Gross mass*: 300 kg
-*Unfuelled mass*: 140 kg
- *Height*: 1.80 m
- *Diameter*: 0.33 m
- *Thrust*: 80.00 kN
- *Burn time*: 2.50 s.
- *Number*: 1.

-Star 75

Thiokol solid rocket engine. 242.8 kN.In Production.Isp=288s. A demonstration motor tested as a first step in the development of a perigee kick motor in the 4080-7940 kg propellant range.

Some of its features include a slotted, center perforated grain in a graphite epoxy filament wound case. With a semi-submerged nozzle with a carbon/phenolic exit cone, and a consumption wafer-type igniter. Burn Rate: 56 mm/s at 34.0 atm and 15.5 Celsius. Burn Time: 105 sec. Action Time: 107 sec. Thrust: 242.83 kN maximum. Total impulse 2,174,539 kgf-s. Propellant mass fraction 0.93.
Chamber Pressure: 34.00 bar.

-AGNES

CFTH-HB solid rocket engine.
Gross mass: 80 kg
-*Unfuelled mass*: 32 kg
-*Height*: 1.60 m
-*Diameter*: 0.21 m
-*Burn time*: 2.50 s.

Associated Stage
- Belisama 1
- Solid rocket stage.
- Mass 80 kg
- *Status*: Retired 1969
- *Gross mass*: 80 kg
- *Unfuelled mass*: 32 kg
- *Height*: 1.60 m
- *Diameter*: 0.21 m
- *Burn time*: 2.50 s.

-CASTOR 4AXL

Thiokol solid rocket engine. 599.8 kN.In production.Isp=269s. Strap-on booster version, first tested May 1992. Its 30% performance increase would improve performance of Atlas and other vehicles. First flight 2001.
The 4AXL version, extended by 2.44 mm, was first tested May 1992. Its 30% performance increase would improve performance of vehicles, such as Atlas and Conestoga. 4AXL was combined with 4B's TVC system to create the stage 1 motor for CTA's ORBEX small launcher.. Length: 12.279 m with nose-cone adapter, 13.711 m with nose-cone. Diameter: 1.0185 m. Propellant Type: TP-H8299 HTPB Polymer, 20% Al, and 68% AP. Propellant Shape: forward cylindrical perforate with seven aft longitudinal slots. Propellant Mass Fraction: 0.884 ground ignited strap-on. Burn Time: 60.1 sec. Thrust (kN, vac): 599.81 average with 700.5 maximum. Isp: 269.2 sec vacuum. Itotal: 34.679 Mns vacuum. Pressure: 41.70 atm average with a maximum of 54.42 atmMEOP. Nozzle Throat Diameter: 318.8 mm. Nozzle Length: 1216.8 mm. Nozzle Exit Diameter: 937.3 mm. Nozzle Materials: 4130 steel with graphite phenolic throat insert, and a carbon phenolic exit cone. Casing Material: AISI 4130 steel 0.28 mm thick. Igniter Type: TX544 (>500 units flown successfully) forward internal pyrogen, with 2.45 kg TP-H8027 propellant that is cartridge loaded. Specific impulse with 15:1 nozzle 382.4 seconds.
Chamber Pressure: 42.30 bar. *Area Ratio:* 8.64. *Propellant Formulation:*HTPB.

AKA: Castor 4AXL; TX-780XL. *Status*: In production. *Gross mass*: 14,851 kg (32,740 lb). *Unfuelled mass*: 1,723 kg (3,798 lb). *Height*: 12.28 m (40.29 ft). *Diameter*: 1.02 m (3.34 ft). *Thrust*: 599.80 kN (134,840 lbf). *Specific impulse*: 269 s. *Burn time*: 60 s. *Number*: 40 .

Hybrid:

Like for the other types of rocket's engines, there are several types of hybrid launcher. They are manufactured by different builder. So existing different kind of technology for the engine with different propellant.
Let's see some examples of most famous hybrid engines and their propellants:

- DOLPHIN-1:

Characteristics: *Status*: Retired 1984.
Gross mass: 7,500 kg
Height: 15.50 m
Diameter: 1.07 m

Engine: Dolphin, Starstruck.inc, Lox/Solid rocket engine.
Thrust: 155.00 kN

Propellant: Lox/Solid, liquid oxygen was the earliest, cheapest, safest, and eventually the preferred oxidizer for large space launchers. Its main drawback is that it is moderately cryogenic and therefore not suitable for military uses where storage of the fuelled missile and quick launch are required. Solid propellants have the fuel and oxidizer embedded in a rubbery matrix. They were developed to a high degree of perfection in the United States in the 1950's and 1960's.
Mixed liquid/solid propulsion systems offer the potential for the storability of a solid rocket, the safety and throttle ability of a liquid rocket, and lower cost than either. Believers experimented throughout the last half of the 20th Century, but it only after the year 2000 that the possibility of such a system going into production seemed imminent.
Oxidizer: Lox. *Fuel:* Solid. *Oxidizer Density:* 1.140 g/cc. *Oxidizer Freezing Point:* -219 deg C. *Oxidizer Boiling Point:* -183 deg C. *Fuel Density:* 1.350 g/cc.

There are a lot of rockets which use the same propellant for all the stages of the rocket (fisrt or upper stage): Falcon SLV, Thrust: 1,400 kN; AMROC: *Thrust*: 931.33 kN…

- HYPERION:

Characteristics: *Gross mass*: 100 kg (220 lb).
Height: 5.80 m (19.00 ft).
Diameter: 0.15 m (0.49 ft).
Thrust: 6.00 kN (1,349 lbf)

Engine: Hyperion, eAc.inc, hybrid N2O/Solid rocket engine.
Thrust: 6.00 kN

Propellant: Liquid nitrous oxide is the oxidizer of choice for hybrid rocket motors because it is benign, storable, and self-pressurizing to 48 atmospheres at 17 deg C. Solid propellants have the fuel and oxidizer embedded in a rubbery matrix. They were developed to a high degree of perfection in the United States in the 1950's and 1960's.

The combination of HTPB or PMMA solid fuel and N2O is totally benign and non-toxic. It is difficult to find a rocket motor safer than one using rubber/plastic and laughing gas. It is non-explosive. The rubber / LOX combination has been rated by the Vandenberg range as a 0 lb of TNT equivalent (i.e. non-explosive), and N2O is even safer (it is used as a pressurant for whipped cream).

Oxidizer: N2O. *Fuel:* Solid. *Fuel Density:* 1.350 g/cc

There are a lot of rockets which use the same propellant for all the stages of the rocket (fisrt or upper stage): SBIR, *Thrust*: 1,100 kN; SpaceDev: *Thrust*: 73.50 kN…

- KRD-604 and R-13:

Characteristics: unknown

Engine: Dushkin.inc, Nitric acid/Solid hybrid rocket engine

Propellant: The composition of propellant-grade nitric acids is covered by Military Specification MIL-N-7254. The nitric acids are fuming liquids which vary from colorless to brown, depending on the amount of dissolved N2O4. There are different compositions:

-AK20K - Russian formulation consisting of 80% nitric acid + 20% N2O4 + unknown additive

-AK27I - Russian formulation consisting of 73% nitric acid + 27% N2O4 + iodine passivant

Oxidizer: Nitric acid. *Fuel:* Solid. *Oxidizer Density:* 1.510 g/cc. *Oxidizer Freezing Point:* -42 deg C. *Oxidizer Boiling Point:* 86 deg C. *Fuel Density:* 1.350 g/cc.

We found three different types of hybrid engines which are used on 12 different rockets. On those 12 rockets, 6 are equipped by LOX/Solid engines, 4 by N2O/Solid and only 2 by Nitric Acid/solid.
All can be use for the first stage or the upper stage of the rockets which means that we can found a lot of different size of engine.

Initial work on sensors (MEMS)

This paragraph is dedicated to describe our really first search on sensors.
It is obvious that the sensors, which could be used in our engines, need to be very small.
Consequently, our search must be focused on MEMS (micro electromechanical sensors).

Here are a few websites, which present these sensors.

There are many manufacturers of MEMS…

Among of them, we must find those sensors, which can fill out our extreme conditions.

http://microstrain.com/
http://www.sensorsmag.com/list/aerospace-military-hs/aerospace-12
http://www.sensonor.com/
http://www.st.com/internet/com/home/home.jsp/
http://es.farnell.com/

http://lib.semi.ac.cn:8080/tsh/dzzy/wsqk/SPIE/vol3990/3990-22.pdf is a PDF about how MEMS work in the aeronautical industry…

Design of the system

1. Introduction

Here are some infos about our very specific engine, which will be the engine of the second stage of the launcher (higher acceleration):

- Descriptive drawing

  Diameter of the throat: 7mm
  Angle of the convergent: 30 °
  Angle of the divergent: 12°

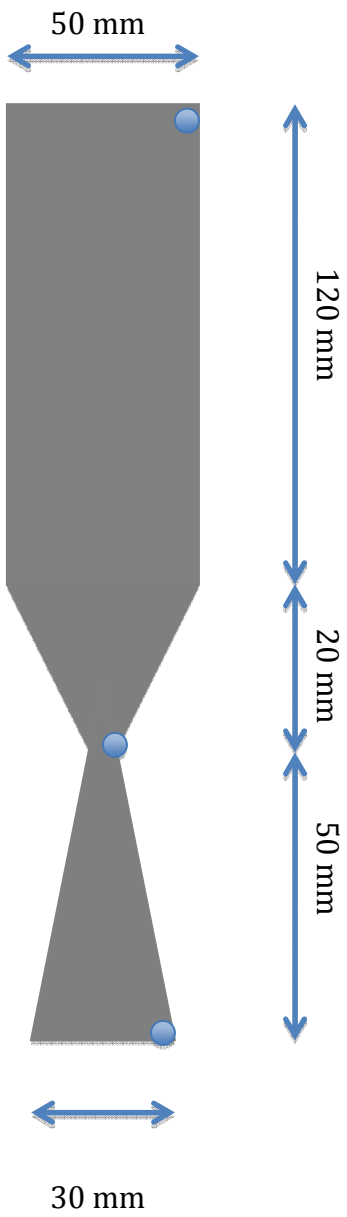

: Points where the sensors should be placed (following the calculations of the Wikisat team)

2. Simulation on solid works

At this point, we want to set the parameters (with the simulation) in order to determine the right sensors to put.

Solid works is a tool used by professionals all over the world. In fact, it is easier to handle as other CAO soft wares.

Basically, the main job to be done, was to create the model which will be used, and to create a flow in it. The tool is than able to simulate the flight, as it should happen in real conditions.

We created a rocket with the information we had on it, but we could not use it, as we were not aware of some other data that revealed to be absolutely necessary.

Consequently, we made the choice to use an existing model, which is supposed to have the same comportment as the one we designed.

The team responsible of the design provided this model.

Here is a screenshot of both rockets

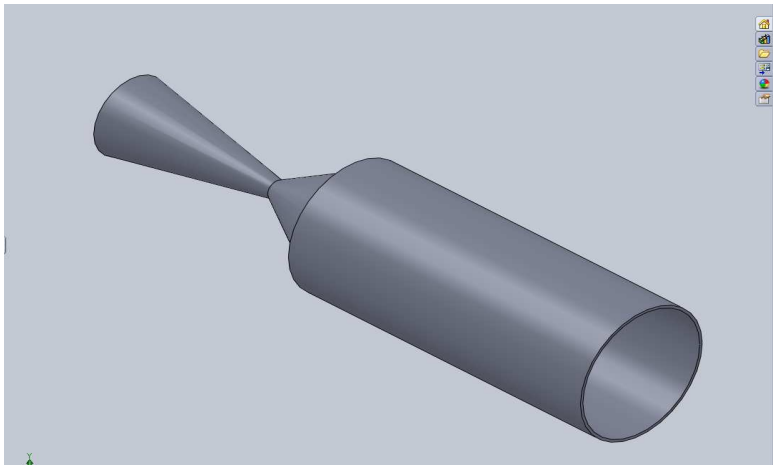

Our Model

Existing Model

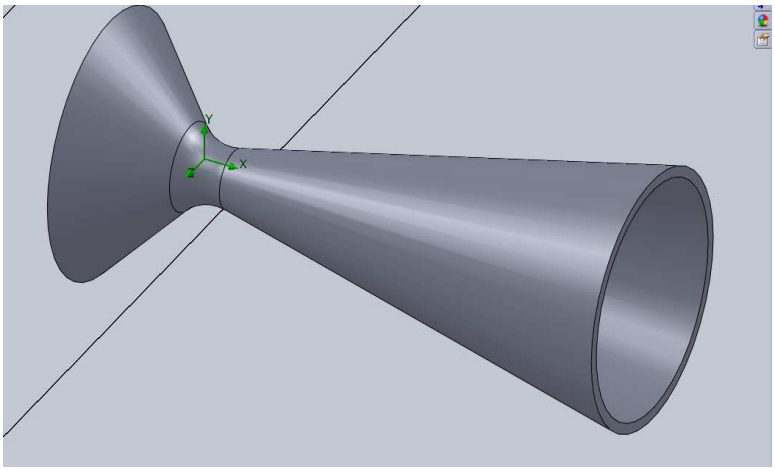

Here will appear some graphics

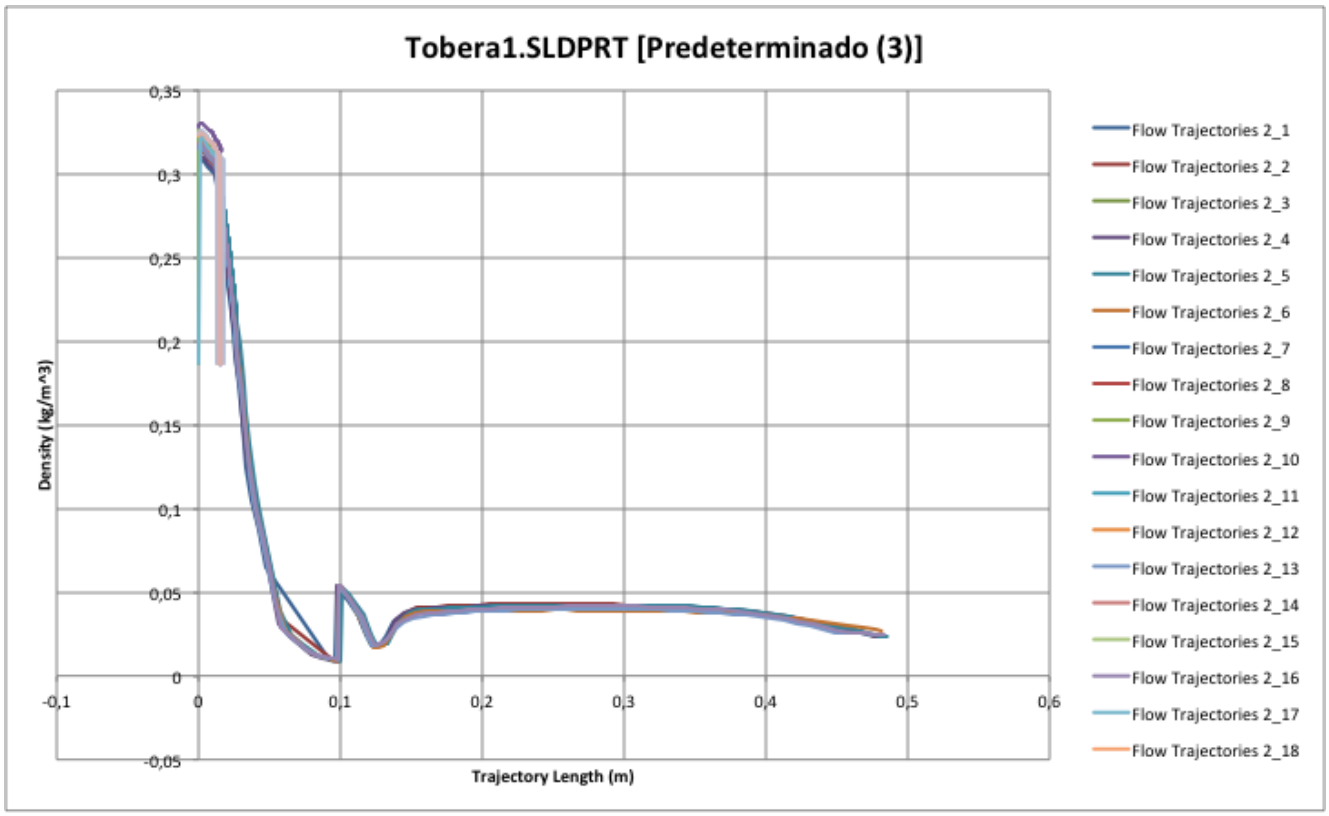

Figure 1 : Density (kg / m^3) versus Trajectory Length (m)

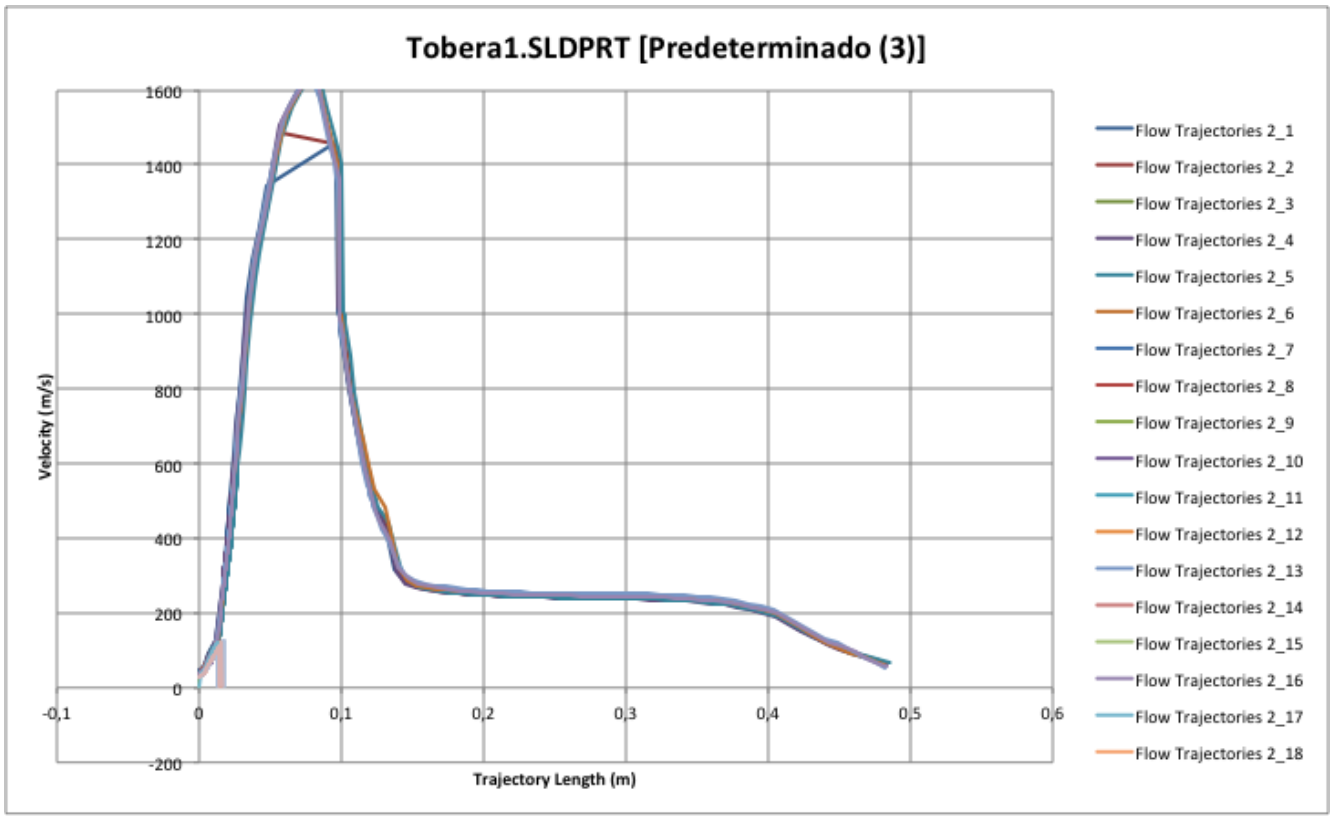

Figure 2 : Velocity (m/s) versus Trajectories Length (m)

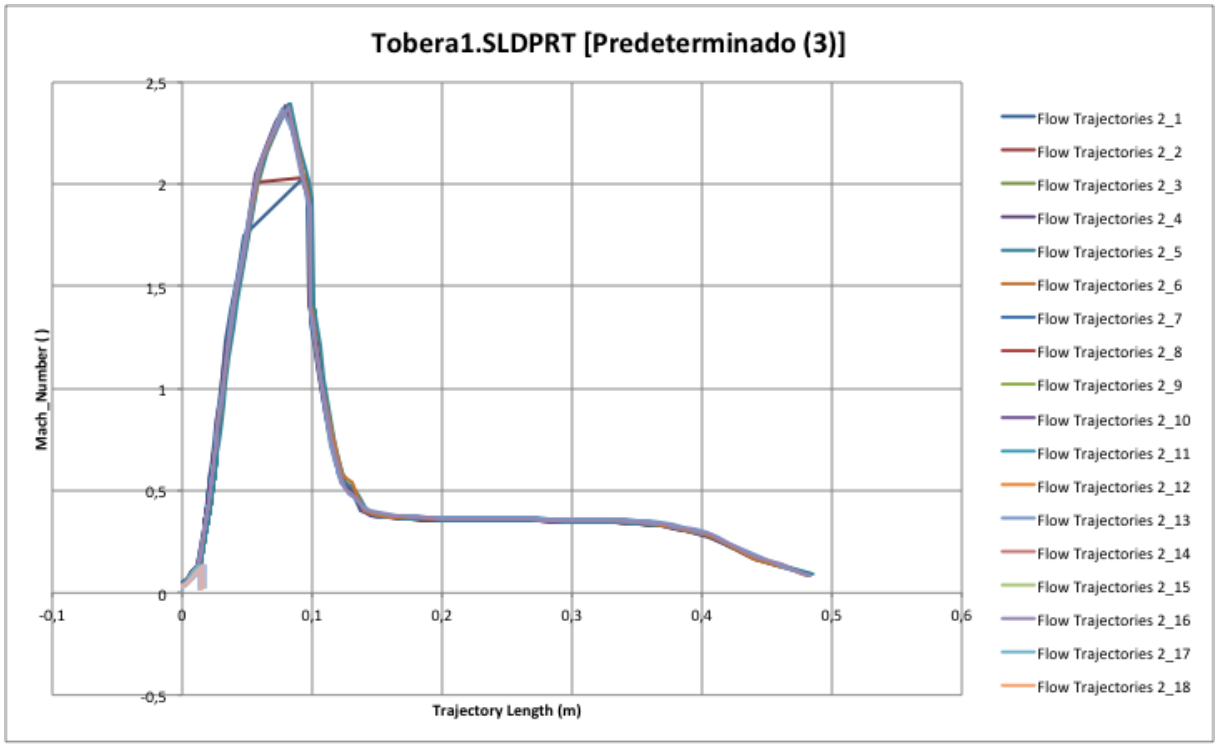

Figure 3 : Speed (Mach) versus Trajectories Length (m)

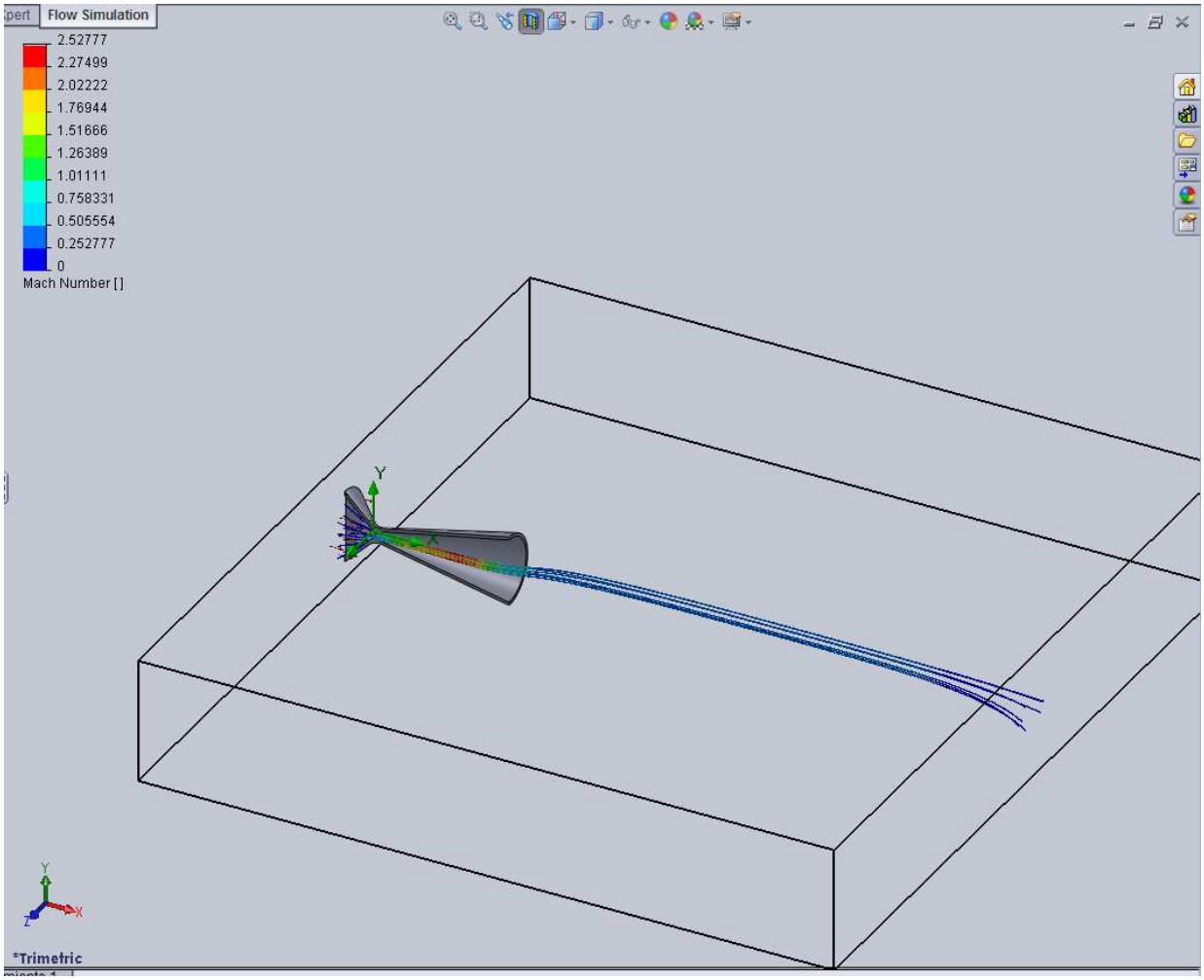

Figure 4 : Mach number 3D

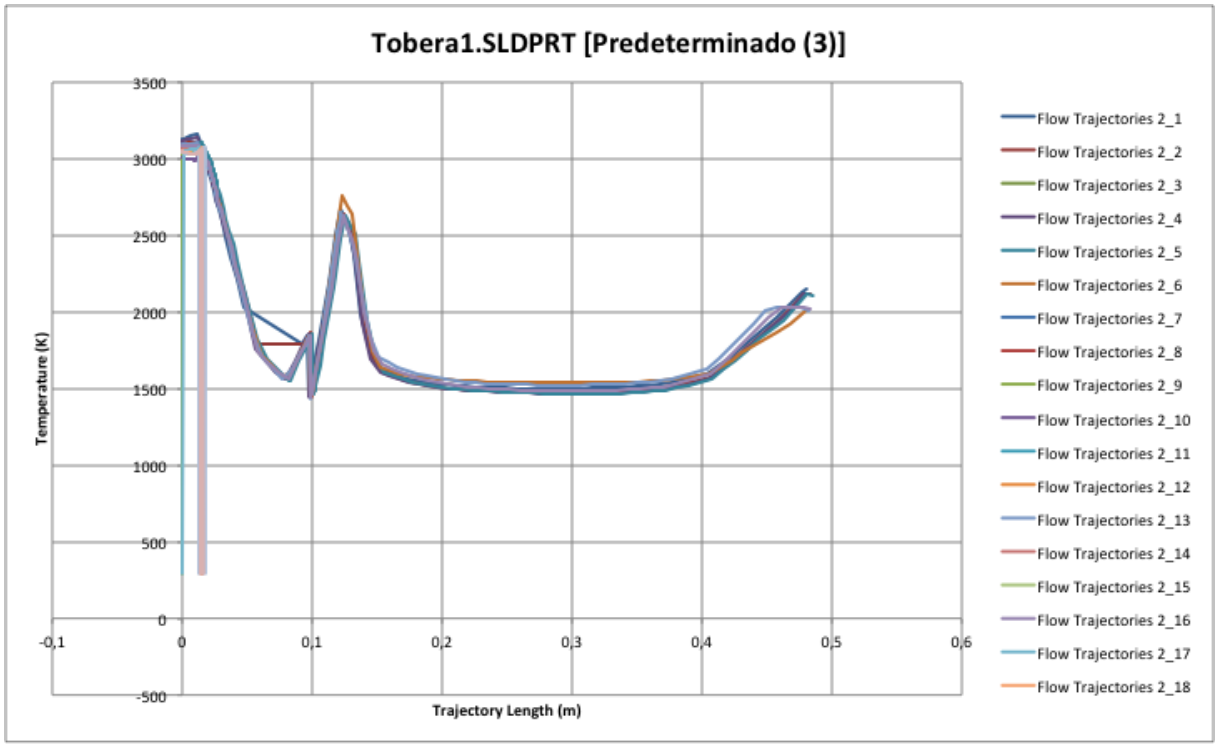

Figure 5 : Temperature (K) versus Trajectories Length (m)

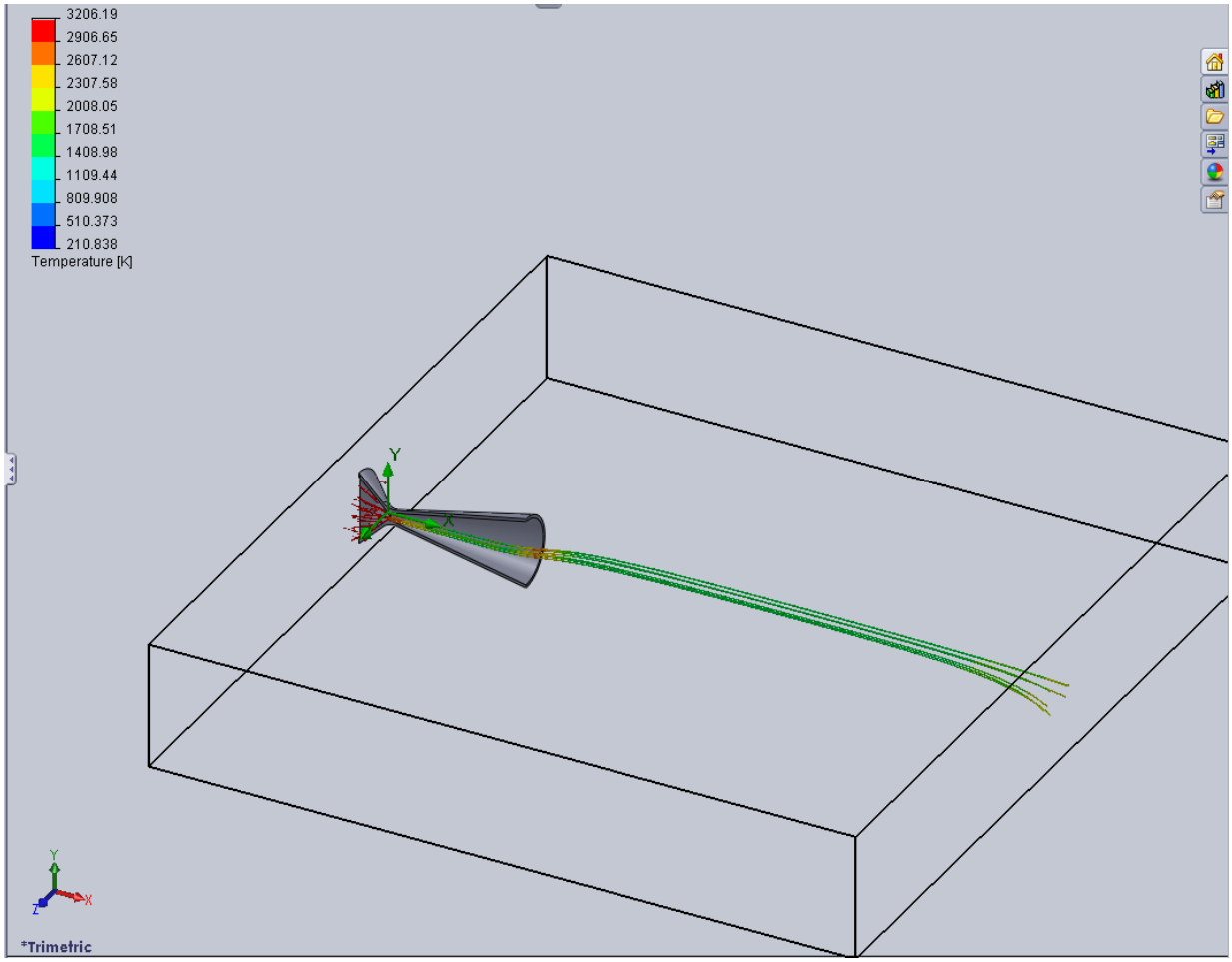

Figure 6 : Temperature 3D

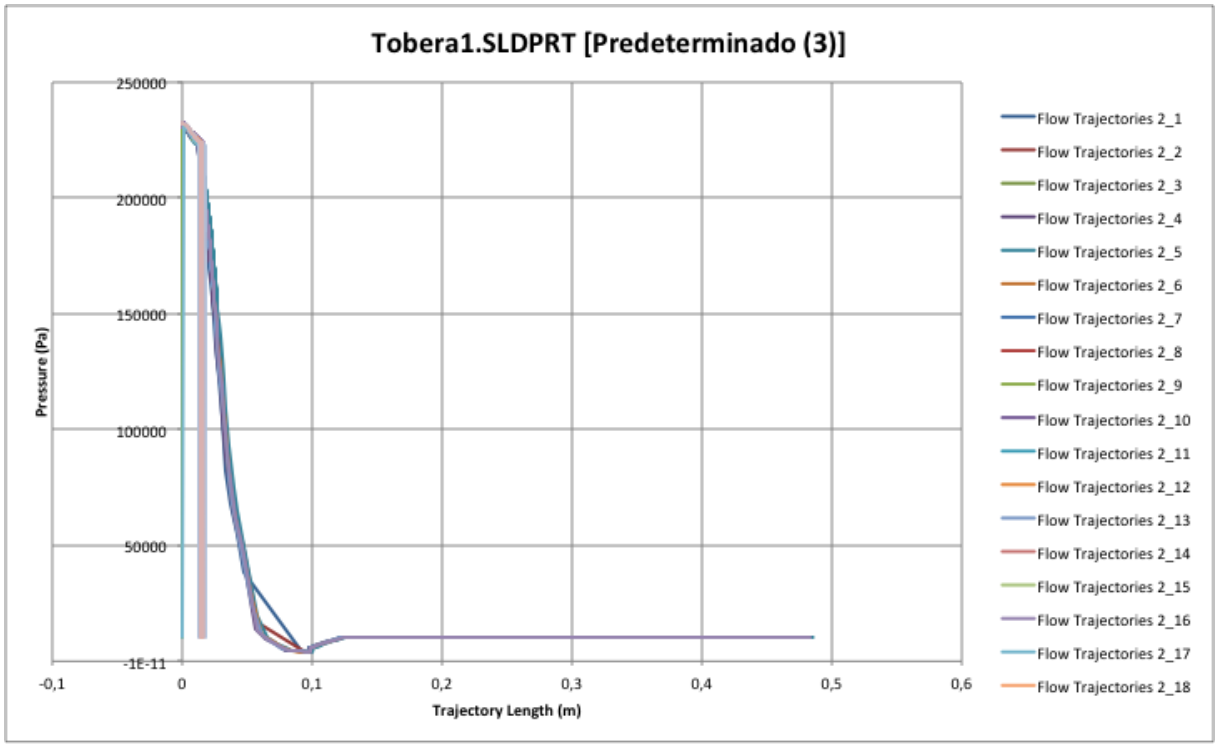

Figure 7 : Pressure (Pa) versus Trajectorie Length (m)

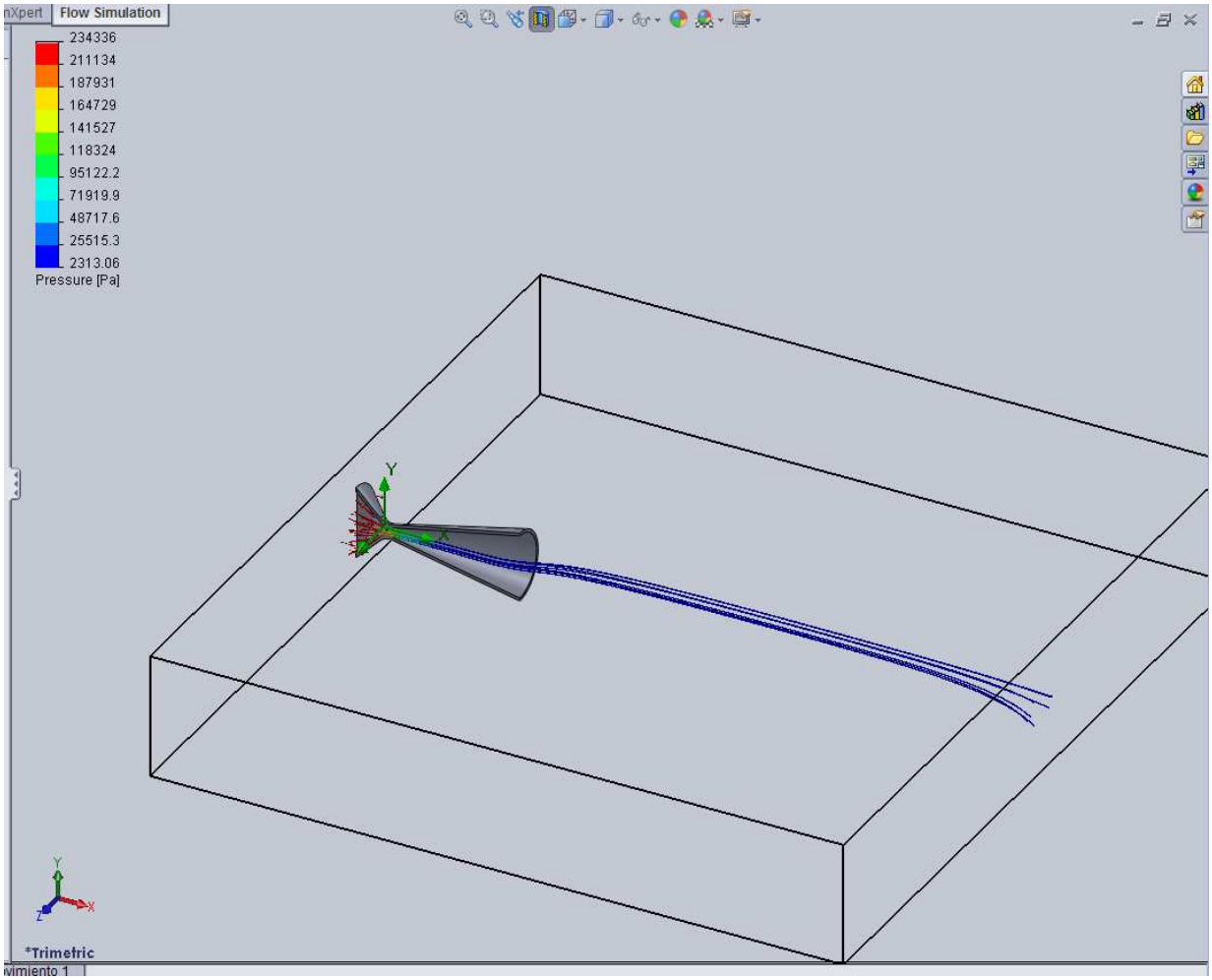

Figure 8 : Pressure 3D

3. Sensors equipments:

First, let's check the process our rocket will go through:

- **Bench tests:** enables a bigger variety of sensors and of tests
- **Real flight tests:** is more constraining as far as the quantity of tools that can be used is concerned

After research and observation, we thought that we could propose two "wind tunnel" systems. The first system will be our first idea; it means the system which is put on the rocket. And the second will be another system to measure the flow also but on a test bench.

So we have to find the best sensors to characterize the flow and how install them on the rocket, but without forgot that we have to make two different systems and one of them will be never back on earth. But both have the same requirements:

- Accuracy data
- Range temperature more above 600°C
- Avoid using analogue device
- Avoid using a regulator
- Power consumption less than 3,7V
- The lightest sensors and other equipment's
- Very small rocket

The major difference between those two systems is that one will be sending in the space instead of staying in a laboratory. Consequently we have also to find a method to send the data from the space to the earth. So we have to propose one wind tunnel with a local communication (wireless) between sensors and computer and one with a telemetry system.
We can also use more sensors for the test bench because they will be not destroyed.
Let's see our first thinking about the two systems.

<u>Test Bench</u>

Pack:

- 2 cameras HD
- 4 temperature sensors
- 1 wireless module
- 1 MCU
- Wires
- 1 mother board
- 1 battery

<u>Flight test</u>

Pack:

- 1 camera
- 1 accelerometer
- 1battery
- 1 temperature sensor
- 1 telemetric system
- 1 MCU
- Wires
- 1 mother board
- 1 gyroscopic sensor

So now we have a first idea of what kind of sensors we hate to find and to fix on the rocket.

We did some research to find those sensors and I found all of them let's see the list:

- MCU: Arduino- A000048, ATMEGA 328 (5€/0,05Kg/8bit/32kB memory/digital device)
- Camera: STV0986- ST micro (2,8V/I^2C)
- Temp sensor: PT1000- P1K0.232.6W (class B/-200_+600/3V/2wires)
- Battery: T32/8AA9- (3,7V/13g)
- Gyroscopic sensor: IMU 3000 (3axes/3,6V/24pins/I^2C/35€/1g)
- Accelerator sensor: LIS331HH- (3axes/3,6V/16pins/I^2C/SPI/5€/1g)
- "Wireless module: MTS2BTSMI- (3,3V/1OOm/72€)"
- "Telemetric module: GSM0308-10- (3,3V/1,9GHz/7g/59€)"

Or Zigbeemodule??

After found those sensors we thought about how fix them on the rocket to have the best results, please see the following pictures.

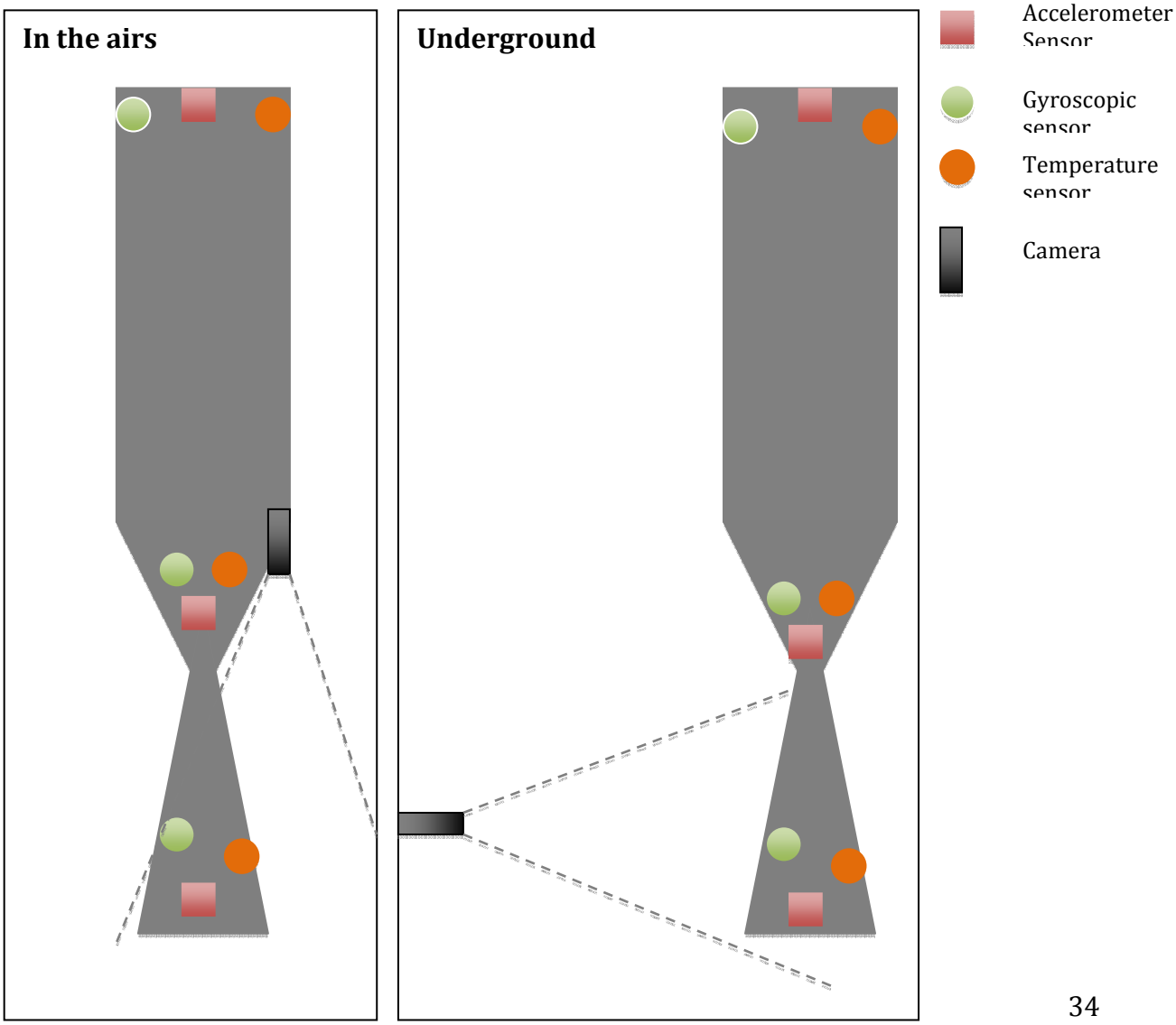

For the telemetric system, we have to talk with our client to know what kind of technology they are going to use for their communication and it should be better to use the same device to send our data instead of implant a new one.
Also for the wireless module, we can maybe use a other system with wires if it is less expensive.
Moreover we have to think about how connect all the sensors with the transmitter module and how be sure to erase all errors or deviations.

So now we have to study the quantity of data that we want to receive to define the good transmitter. And also find how we can send the video from the HD camera; it is probably impossible to send all the movies since the space with a normal transmitter and a so small battery. So we have to define it.
Concerning the test bench we think that it must be better to connect the camera by wires to collect the entire information with the best quality.

Remember that 1 o/s is the same that 8 bits/s. Than with all those sensors, we will receive a quantity of
Details:

Camera:	8-bit
Gyroscope:	3x16-bit
Accelerometer:	3x16-bit
MCU:	8-bit
Temperature:	?

Total =112bit. So our transmitter must be able to send 14octet/s plus the data of the temperature sensors.

4. The transmission to earth

This is a main problem if we want to implement our little rocket with sensors. How are we going to be able to collect the data (how to send it back on earth in fact?)
This is no more a problem, if we try to adapt the system on bigger launchers as they always have a telemetric system, which is in correspondence with a base on earth.