FINAL PROJECT

Building 12 apartments and a shop in 28 Octobriou, 63 of Athens

Block I : Project

T.E.I. PIRAEUS, 2015

Yasmina Martínez Rebollo
Tutor: Sophia Metaxa
Academic Year: 2014-15

ΠΕΡΙΛΗΨΗ

Η εργασία που πραγματοποίησα αφορά κτήριο που βρίσκεται στην οδό 28ης Οκτωβρίου, νούμερο 63 στην Αθήνα. Παρατήρησα ότι ήταν ένα εγκαταλελειμμένο κτήριο και αποφάσισα να το ξαναφτιάξω ώστε να είναι κατοικήσιμο, σύμφωνα με την τωρινή νομοθεσία.

Αποφάσισα να κρατήσω την παλιά πρόσοψη ,με σκοπό να διαφυλάξω την αισθητική της περιοχής ,και να γκρεμίσω το εσωτερικό του κτηρίου για να προχωρήσω στην νέα κατασκευή.

Για να συγκρατήσω τις όψεις του κτηρίου (πρόσοψη και πλάγια όψη) και να εμποδίσω αυτές να πέσουν την στιγμή του γκρεμίσματος , χρησιμοποίησα σταθεροποιητές όψεων, οι οποίοι είναι ειδικοί για αυτή την δουλειά.

Από την στιγμή που οι όψεις είναι συγκρατημένες , συνέχισα με το γκρέμισμα του κτηρίου.

Όσον αφορά την κατασκευή του νέου κτηρίου, αποφάσισα να κατανείμω τους ορόφους έτσι ώστε στο ισόγειο να υπάρχει μαγαζί , ένας μεγάλος κοινόχρηστος χώρος για να τοποθετήσω τους μετρητές διαφορετικών εγκαταστάσεων και ένα δωμάτιο με κάδους απορριμμάτων. Τους άλλους ορόφους τους χώρισα σε 3 διαμερίσματα κάθε έναν , με ένα, δύο και τρία υπνοδωμάτια.

Για τον φέροντα οργανισμό, χρησιμοποίησα το πρόγραμμα CYPECAD ,το οποίο μου υποδείκνυε αν αυτός είναι σωστός , σύμφωνα με τα φορτία που αντέχει το κτήριο. Εφόσον ήταν όλα σωστά , το πρόγραμμα υπολόγιζε τις διαστάσεις της τσιμεντοποίησης.

Αφότου κατάλαβα ότι ο φέροντας οργανισμός είναι σωστός , έκανα την εγκατάσταση του κτηρίου με το πρόγραμμα CYPE MEP, το οποίο μου επιβεβαίωνε ότι η εγκατάσταση είναι σωστή και μου υπολόγισε τις μετρήσεις όλων των απαραίτητων στοιχείων για κάθε μια από τις εγκαταστάσεις, Στα παραρτήματα έβαλα τις κατόψεις του φέροντα οργανισμού και των εγκαταστάσεων, όπως επίσης και τους αποδεικτικούς πίνακες με τους υπολογισμούς για αυτά τα δύο.

RESUME

The project I've done is located at October 28, number 63 in Athens. I saw that it was an abandoned building, and I decided to redo it again so were living under the current rules.

I decided to leave the original facade, to continue with the same aesthetics of the area and demolish everything inside the building to proceed to new construction

To fix the building facades, and prevent these falling into the time of the demolition, I used stabilizers facade, which are special to this method of execution.

Once fixed facades, proceeded to demolish it.

When it went to the new building, I decided to distribute the plants so that on the ground floor us a remnant to a shop, and a large common area, thus placing the counters of various facilities and fourth waste containers.
And the other four plants have divided the three houses each, one, two and three bedrooms.

For structures, I used the program CYPECAD, which told me if I was correct structure, according to the loads carried by our building. And once is all right, is sized foundation.

After to have calculated that the structure is correct, did the installation of CYPE MEP building, which has gradually become clear to me that the installation is correct and has made me all the necessary measurements for each of the facilities elements.

In Annexes I have attached the plans of structures and facilities, as well as tables of checking the calculations of both parties.

OBECTIVES:

The objective of this project is new construction inside existing buildings, preserving the façade.

Of the building on two distinct actions will be undertaken:

- The demolition the façade of the building, for to maintainer its current status.
- The Full implementation of the building. The structure and distribution of it.

INDEX

1 OBECTIVES:

The objective of this project is new construction inside existing buildings, preserving the façade.

Of the building on two distinct actions will be undertaken:

- The demolition the façade of the building, for to maintainer its current status.
- The Full implementation of the building. The structure and distribution of it.

2 METHODOLOGY

To do the job, I realized first search of a building and a project idea that they do.
I thought the building used and I chose it because I liked it and I realized I could keep the façade, something that would be new to me.
I took pictures of the building and then took measurements of the façade of the building, in order to draw the façade and to make the structure and redistribution of the building.

First I drew the structures and distribution in Autocad.
Once the KOR fulfilling all regulations drawn for distribution and furniture.
Once, it had drawn in Autocad, I spent the .dwg file as a template to CYPECAD

CYPECAD in a program that serves to tell if the structure used, according to the loads imposed on the building, and movements such as wind or earthquakes, hold necessary.

I drew the following structures Autocad exported template and calculated until all give correct

When they had the correct structure, pass the same template to CYPE MEP, which is another program from the same manufacturer, which has the function to tell you that both the thermal study, as facilities are correct.
For starters did the closure of the yard and all particionas, composed of layers that I have decided to be correct for each partition,
When I finished, I have made the calculation of the thermal study to see if the building meets.
Then I started to make solar thermal, air conditioning, gas, sanitation and electricity,

When you have completed all the facilities I have calculated that I go aside data for each facility and have them printed drawings.

Then I translated it to English reports created since the program is in Castilian.

There are two documents that I left in Castilian in case he had to calculate some part of it separately.

3 MEMORY

3.1 Descriptive Memory

3.1.1 LOCATION

The building is located in Athens, exactly at 28th October Street, 63.

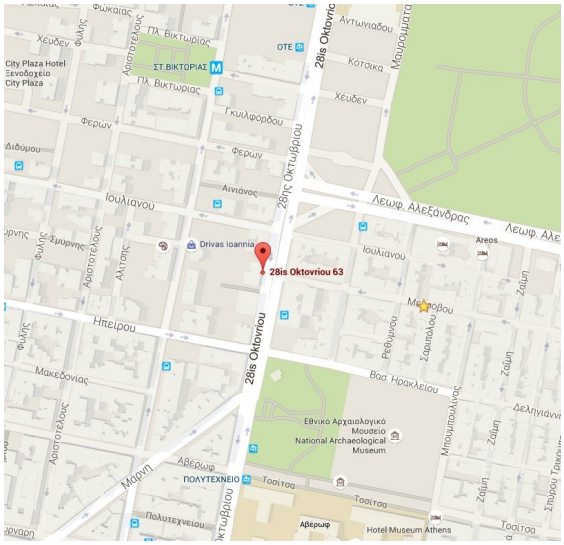

3.1.2 THE OBJECTIVE

The objective of the project is to knock down the building to build a new one based on the rules of each part of building, retaining its façade through rehabilitation
Distribution

3.1.3 DISTRIBUTION

In the lower level, we have created a shop, and a common areas we have placed the quarters-counters of electricity and water.

The type level, we have decided in 3 apartments, of one, two and three bedrooms.
La vivienda A, tendra dos habitaciones dobles y un baño con plato de ducha, la vivienda B dispondrá de un comedor – cocina, con una habitación doble y un baño con ducha, y la vivienda C, que será la mas grande, contará con una habitación doble con un baño propio, el cual tiene un plato de ducha, dos habitaciones sencillas y un segundo baño con bañera.

Here we give pictures of surfaces the comercial, residential and common areas.:

LOWER LEVEL

COMMON AREA

Pass Area	82,05 m²
Fourth container	16,09 m²
TOTAL	**98,14 m²**

SHOP

Fourth container	145,83 m²
TOTAL	**145,83 m²**

TYPE LEVEL

APARTMENT 1

Hall-Corridor	7,60 m²
Distribuitor	2,15 m²
Living Room	22,25 m²
Principal Bedroom	14,55 m²
Bedroom	10,68 m²
Kitchen	6,95 m²
Bathroom	5,41 m²
TOTAL	**69,59 m²**

APARTMENT 2

Hall	2,83 m²
Living Room-Kitchen	27,87 m²
Principal Bedroom	10,45 m²
Bathroom	4,40 m²
Laundry	2,31 m²
TOTAL	**47,86 m²**

APARTMENT 3

Hall	8,03 m²
Corridor	5,09 m²
Living Room	20,42 m²
Bedroom 1	18,91 m²
Bedroom 2	9,19 m²
Bedroom 3	6,75 m²
Kitchen	9,32 m²
Bathroom 1	6,23 m²
Bathroom 2	7,69 m²
TOTAL	**91,63 m²**

COMMON AREA

Pass Area	24,00 m²
TOTAL	**24,00 m²**

ROOF TOP

COMMON AREA

Pass Area	23,60 m²
TOTAL	**23,60 m²**

Total Low level:	243,94 m²	x 1 floor =	243,94 m²
Total Type level:	233,08 m²	x 4 floors =	932,32 m²
Total Roof level:	26,60 m²	x 1 floor=	23,60 m²

TOTAL USEFUL AREA = 1199,89 m²

3.2 Constructive Memory

3.2.1 Structural Changes

The current structure of the building will be completely demolished, and we will execute within a new building. For to keep its current façade without risk of being damaged, we will fix as duly explained the way that we explain at point *1.2.2.1 Fixing the façade and inside the building demolition*

3.2.1.1 Fixing the façade and inside the building demolition.

In the building, we will make the so-called "Façade shell".
The façade shell consist to maintain through auxiliaries like structures, reinforcements.. the façades and demolish everything that is inside for the entire subsequent construction of the building. Outside the building will respect the old design and the elements of the façade like balconies, doorways, locksmith...
(The interior structure and especially the constitution of slabs, can influence us in the construction process)

In this type of work to be done, we will present the following issues, which solve the way they explain:

a) Bracing of the façade:
We'll use the stabilizer façades which it is a mechano giant that allows to hold the façade while the interior is demolished and re-build in the same conditions as if a new work it were, keeping fastens securely and reliably, to join the new structure; but keeping the original estate exterior.

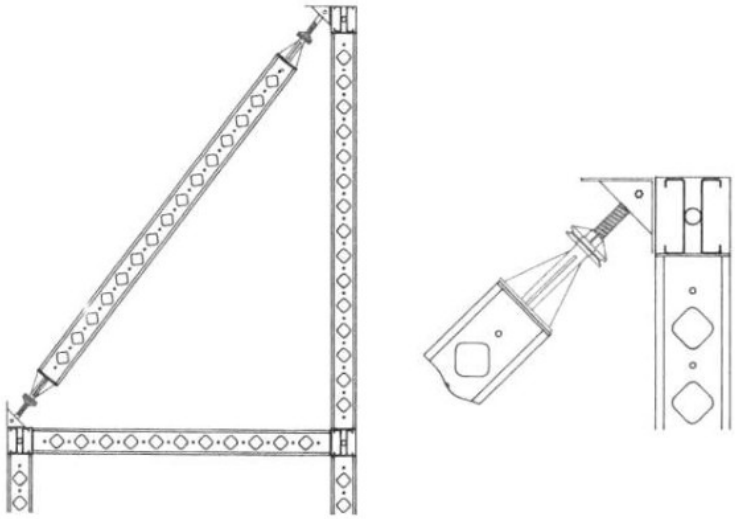

Diagonal enhancer detail for to close of stabilizer. Notes UPC

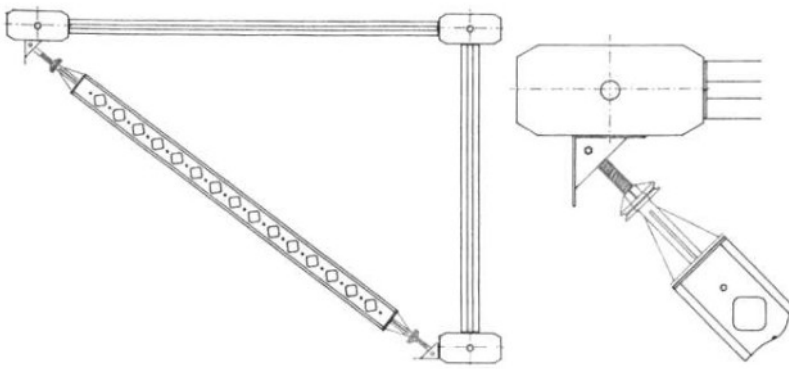

Diagonal enhancer detail for horizontal flights. Notes UPC

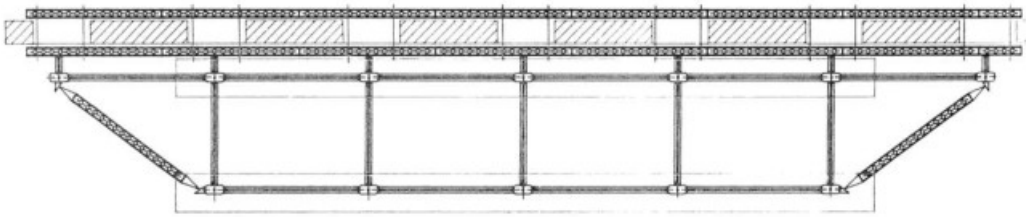

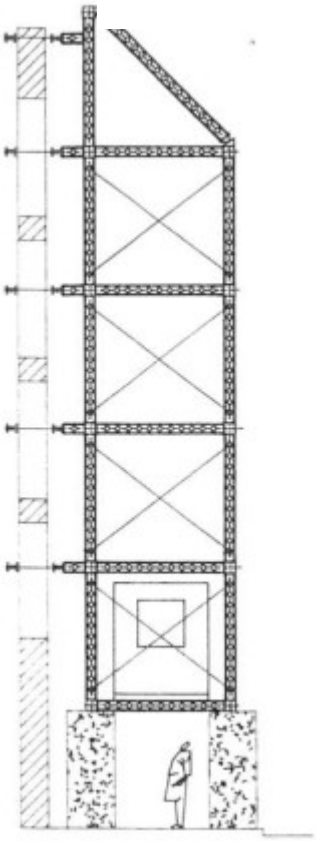

Notes UPC

3.2.1.2 Unions and anchors

To attach the façade with the new structure, we will use an anchor for grouting because this industrial anchor is more advisable to anchor façades that do not work structurally such as our building.

The realization of the anchors, consist in inclined holes (about 45 degrees) with longer than anchor is achieved. This orifice, to the appropriate depth for anchoring chosen, based wipes a brush and water. Subsequently the metal sleeve or mesh is introduced, and the mortar is injected.
Once this filling hole is placed in the bulb created, a steel rod of suitable diameter and the designed shape. It is noteworthy that the bulb above performs a function consolidation façade.
For anchoring the façade this is done each distance, in our case, each 70cm. Thus we form the perimeter band armour that embraces the façade.
the inclination of the holes must change its direction to achieve a sewn axes, but it is possible to, also inclinations in a plane horizontal for the hole is drilled.

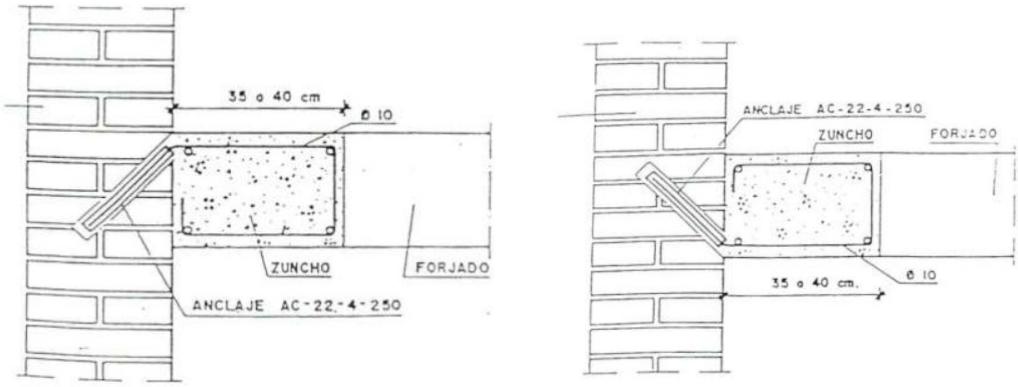

Details to manufacture wall anchors. Notes UPC

3.3 Execution

For the execution of the building once it has been verified that the façade is securely anchored, we will proceed with the demolition inside the building, for the new construction.

Then will be made the foundations, and we will begin to made the columns, to the level of the first slab, in which we will produce expect for to continue with the columns at the nexts floors.
we will build the slab and back up the columns to the next level of slab, and so successively.

Before making the upper slab, build the staircase slab of that floor, which will be united by the different slabs of each floor.

3.3.1 Demolition and shoring

One the façades fixes with fixing describes in the previous point to ensure stability, we proceed to emtied.

The process user for the demolition of the interior, has been executed with hand tools such as shovels, picks, hammers, ..and small machinery with hand operated as biting or jachhammers.
This will make us the degraded performance and increased cost.

We will start the demolition, removing the carpentry and furniture, and then we will continue with the partitioning, from the top floor down, always working on the same floor for extra security.

Then we proceed to demolish one by one all the structural elements that make up each floor and when the plant is empty, we will demolish its slab, and continue with the lower floor, so on, until you have brought down the whole building. To demolish the slab, and we will cut it joists starting with the area that can get up, then cutting or removing their ends. Iran knocking down the stairs before manufacture where support as it also constitutes a load on it

3.3.2 Earthworks and foundations

The foundation of our building is made up of some isolated footings for the foundations, which will be joined by tie beams, and a running shoe for ascentor walls. It does this with concrete C25/30 and armor B400S. The dimensions of the footing through determine the relevant calculations

.
When we clean and smooth terrain, we will stake out the footings, as measured by each, indicated in Annex 1.

Once done stakeout, First we excavate holes for foundations, and when we reach the end check if the land meets the conditions set allowable stress in the project, and encofraremos. Then continue pouring a depth of 10 cm of lean concrete to level the bottom and place the necessary armor according to project.

Then we will clean the surface to place the indicated armor and we will start pouring concrete. We will have to be aware that the armor doesn't move during concreting.

The concrete will be poured and we will compact with pump and vibrators.

For our building, we will made a foundation based on rigid footings for each column, joined by cetering beams, a footing run for the wall of the elevator shaft.

The fundations will consist of concrete C25/30 and B400S steel for the armor.
Both the size of the footings as to armors used in each of them, are exposed on the foundation table in ANNEX 1

3.3.3 Structures

3.3.3.1 Stairs

Before initiating the collapse of the stairwell underpin the perimeter. The structure of the staircase is made by reinforced concrete slabs to be supported
in floor beams i bearing walls. The thickness of the slab is 20 cm and the steps are
They run with hollow bricks.
Once the hole made bearing walls will rise to hold both the floors and the
slab stairs.

It will consist of three sections and two intermediate. Access to the ground floor to first floor, as are 3'50m save, consist of 3 sections with two landings, the sections will be 8, 6 and 7 respectively.
To and other plants, being a 3'00m height will be three flights of 6 steps.
All ladders will have a footprint of 30cm ia 16'67cm riser.

3.3.3.2 Lower Level Slab

The floor is made of reinforced concrete, concrete C25/30 and steel B-400s, previously it is thermally insulated with rigid extruded polyethylene panel after this, a film of polyethylene to receive the sill is placed.

3.3.3.3 Columns

The columns, as foundations are composed of concrete C25 / 30 and steel truss B400S.

The first thing to realize is the column formwork. This is armed with vertical and frames made of mid-table boards. The first frame is placed at the base of the column and the second about 30 cm. The following will stack frames at 40 cm distance. When it reaches the height of the beam, it becomes a cut side to put a table that will fund it. At the base of the formwork must leave a gap that will enable us to clean the inside prior to filling clear that before putting the

concrete must plug the gap. Finally they should be placed wooden brackets and secure them to the ground, placed in two directions so as to ensure the verticality of the column.

Placing the armor:

First we will look at the plans to see the amount of iron needed. Usually 4 irons the same diameter are used, and this will vary depending on the weight to be supported. These irons are held by the stirrups, which are 6 mm and irons generally are placed every 25 cm.

The armor of the colums should be tied to the foundation for this previously had to leave the whiskers off the foundation, whether skating or dice. These projections irons must bend into a hook or L are firmly locked to the new armor.

The next step is the pouring of concrete. Previously we verify that respects armor distance of 2 cm to the formwork, since otherwise the armor will be in contact with the outside and that will cause the wetting and oxidation.
Mix concrete generally is 3 parts gravel, 2 parts of fine sand and 1 part cement. Depending on weather conditions or the time we have additives can be added to the mixture to harden faster or stronger.

For stripping columns have to wait a minimum of 10 days.

In our case, we had calculated all the work with pillars of a dimension of 30x30 cm, but the calculations did not comply us because the pillars 9, 12 and 13 endured less loads than having the building, and I decided to increase the size and the reinforcement of them.

In the case of column 9 increases dimension to the first forged 40x40cm, and placing the rods Ø16 songs and change the total armor armor to 4 per side:

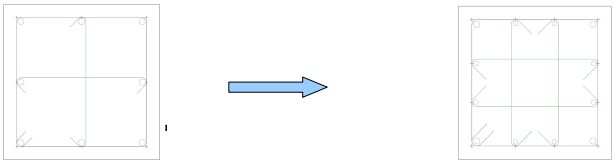

Armed Colums Detail of CYPE

For the columns 12 and 13, increase the dimension of the colums to 35x35cm, and this has already served us.

3.3.3.4 Slab

For all plants, you run a waffle slab with a song of 30cm (5cm of which will be of compression layer) formed with ceramic coffers lost a wheelbase of 70cm.

To begin implementation, we will plank the area that will be forged and beams.
Then post the network of beams to form the slab. Then post the caissons according to the stake, except for abacus, which is the area around the column, which will fully be solid.
For the area of the abacus, we place a spreader of the dimensions required by CYPE and exposed in the project.

http://www.lavirtu.com/imagenes/cache/33/14/68/12273601.jpg

Post the armor reinforcements as indicated on the approved plans and Annex 2, rethinking the stairwell from the pillars 3 and 8, and the hollow of the courtyard from the pillars 9 and 13.

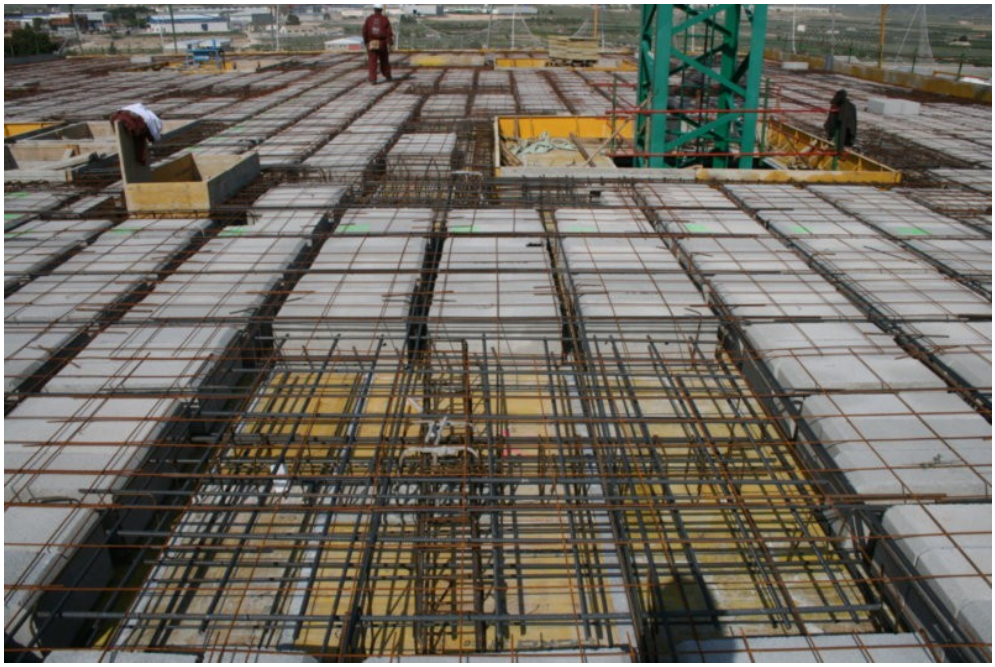

http://www.lavirtu.com/imagenes/cache/49/21/79/3435848.jpg

When we go to start pouring the concrete, above all, we will make a risk over the entire surface of the floor and then begin to pour the concrete, vibrating to see the grout up to the surface, so we will ensure that the concrete is perfectly compacted. Once dry, we will brace, we will remove the formwork and forged by longitudinal beams for 28 days.

3.3.3.5 Roof

For the slab of roofs, we build it forged the other floors.
Reticular slab structure of 25 + 5 with lost coffer ceramic, with a 5cm layer of compression, and total depth of 30cm. The axle spacing is 70cm.

Passable flat cover, not ventilated, with fixed screed, conventional type, comprising: forming slopes: expanded clay 350 kg / m³ density, poured into dry and consolidated its surface with grout, with the average thickness of 10 cm ; thermal islamiento: rigid panel weldable rock wool, 50 mm thick; mpermeabilización monolayer attached: sheet of elastomer SBS modified bitumen, LBM (SBS) -40 / FP (140), fully adhered torch; separating layer under protection: polyester fiber geotextile (200 g / m²); protective layer: 4/3 Rustic ceramic tiles / - / E, 20x20 cm thin layer placed Normal cementitious adhesive, C1, gray, about leveling layer of mortar M-5, you grouted with cementitious mortar joints with high resistance abrasion and reduced water absorption, CG2, to open joint (between 3 and 15 mm), with the same key parts.

To cover the 5th floor, the terrace; as of the 6th floor, first we build a waffle slab like that of previous plants.

On the 5th floor, which we will cover it will be a covered flat passable covencional, comprising for:

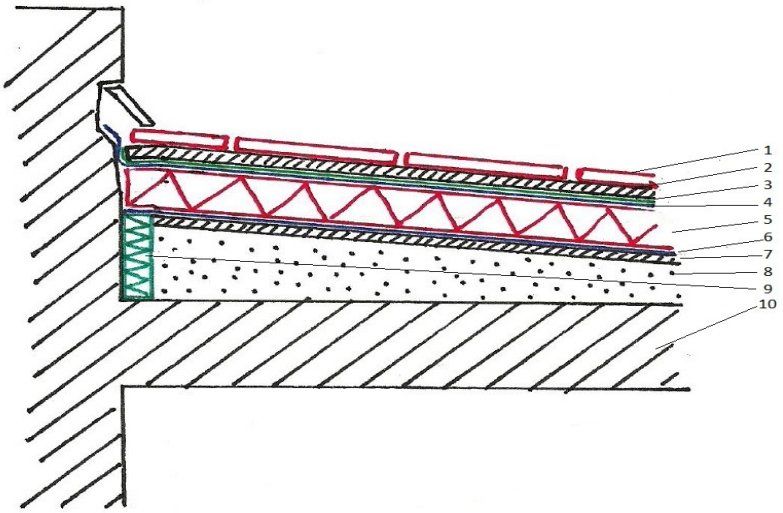

1. Pavement
2. Veneer concrete
3. Nonstick release film
4. Impervious geotextile film
5. Thermal insulation rock wool
6. Vapor barrier
7. Ceneer mortar unpuching
8. Concrete slope formation
9. Extruded polystyrene
10. Slab

For to cover the 6th floor, we build a deck not passable passable cover not flat type, conventional self-protection, slope of 1% to 15%
It consists of: forming slopes: expanded clay density of 350 kg / m³, pour dry mortar consolidated, with average thickness of 10 cm on the concrete slab (not included in the price) surface; rigid insulation panel weldable rock wool, thickness 50 mm; monolayer attached waterproofing: SBS elastomer sheet LBM modified bitumen (SBS) - 50 / G-FP (150R) fully adhered torch.

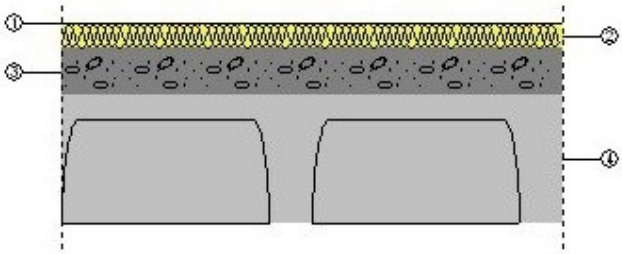

1. Asphalt waterproofing monolayer attached: 0.45cm
2. Mineral wool weldable: 5cm
3. Training of earrings with expanded rcilla poured dry: 10cm
4. Slab

* The curing of the concrete foundation as both structures, will make showering the area with water for 7 consecutive days.

3.3.4 Partition

The different divisions of the building, we divided into three types, depending on what their function is.

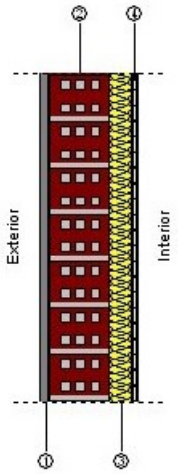

1. mortar monolayer: 1,5cm
2, Hollow ceramic bricks: 11cm
3. Polystyrene panel: 4cm
4. Plasterboard 1cm

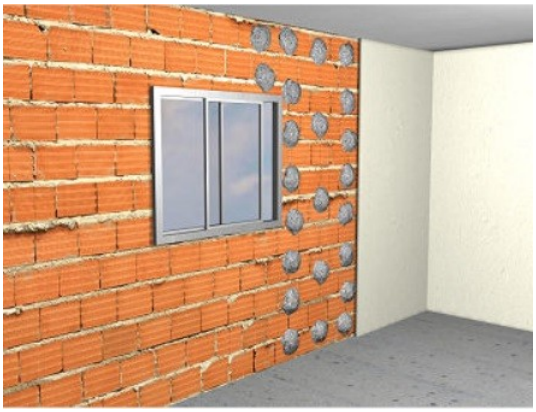

Cladding, CYPE

For the interior patio, when exposed to the outside, for greater thermal insulation, we have built an enclosure made of conventional ceramic bricks of 33 x 16x11 cm, received with mortar M-5 with a direct cladding of gypsum board of 10mm and 40mm built isolation.
For the divisions between different homes, including homes and public areas, the shop and

the common area and the garbage room, as they are transit areas or zones of different users, and may cause more discomfort acoustically, we have placed a partition of 16 cm, composed of two pieces of conventional hollow ceramic brick 33x16x7 cm, received with cement mortar M-5; separated by a layer of expanded polystyrene insulation 20mm.

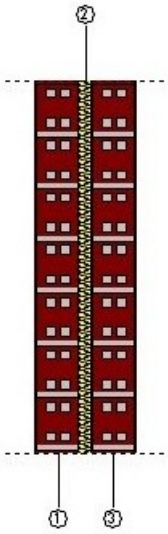

1. Hollow ceramic bricks: 7cm
2. Expanded polystyrene: 2cm
3. Hollow ceramic bricks: 7cm

For the divisions within each of the homes, we need both sound insulation and with a simple partition, a conventional ceramic hollow brick 24x11,5x7 cm; received with cement mortar M-5

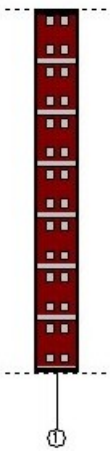

1. Hollow ceramic bricks: 7cm

3.3.5 Installations

We will make building facilities, based on the specific regulations for each, according CYPE MEP.
First we carry out a thermal study to check that the partitions. Then proceed has performed installations

3.3.5.1 Termic Study

We will make the thermal study of the building to see what the user needs to make a proper climate.
After performing the heat study CYPE MEP, we observed that both walls and partitions as the floors and roofs, meet the thermal conditions for habitability in the building.
At first, he gave an error that there was enough insulation in the enclosure of the courtyard. This error is solved by increasing the isolation having incorporated the cladding of plasterboard, 20mm to 40mm.

3.3.5.2 Solar Termic

Functioning:

The functioning of our installation of solar thermal energy is a deposido accumulation of hot water in every home, in which there are two pipes, one that goes with cold water to the solar panels and one that comes with the already heated water. The pipe that goes to the panels (riser), will a circulation pump, which helps make the water flow to the circuit of the solar panels.
The depósido accumulation, will have a connection to the gas boiler, which will help us when the temperature of water heated by the solar panels is not high enough.

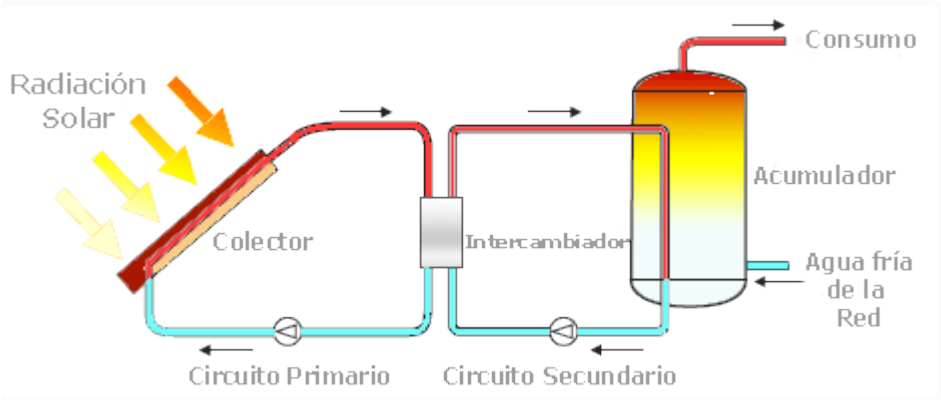

http://solar-energia.net/energia-solar-termica

Our building consists of a solar thermal installation with seven solar panels on the roof.
Also we will have a gas boiler in each apartment and local for support, when solar energy is insufficient.

For installation, draw four solar panels. After we made the driver output and return from the plates accumulators which put one by each house. Also we placed a circulation pump in the return circuit of the solar panel.
Upon calculation cype, he gave an error of insufficient solar panels, which managed placing a total of seven solar panels, which are already sufficient to supply solar power for the entire building.

3.3.5.3 Gas

For the installation of gas, rush of the grid, which will draw a rush climb over the edge of the façade to the floor of the passable cover (floor 6). Once there the carry into the building, in which a set of adjustment, which has the function of regulating the gas pressure is placed received.

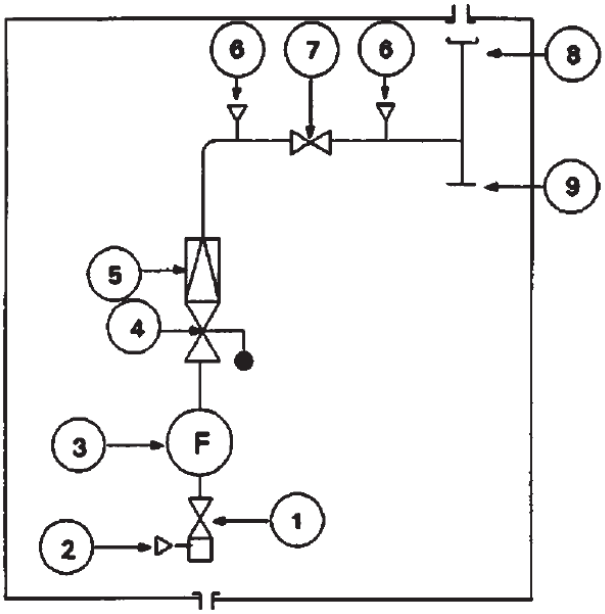

Set of regulation detail

1. Key input spherical shutter link for polyethylene pipe, copper or steel
2. Takes pressure in the MPB, Peterson type incorporated in the key input
3. Filter
4. VIS for maximum pressure. VIS for maximum and minimum pressure (or overflow) in special cases
5. Regulator with VAS (on or off)
6. Takes pressure in the MPA / BP zone, weak caliber with central screw type
7. Key spherical shutter output. It will be also installed vertically aligned with the waste collector
8. output connection. 2-piece connector or tube Cu Ac or equivalent DN DN fitting step two parts
9. Waste Picker

After the adjustment assembly, place the main switch of the building, and then the centralization of counters that we wanted to put on the floor of the terrace.
Since each meter, there will be a copper tube to each of the houses and the local, which will have a key housing to shut off the gas, because the user is going or has a problem.
From lllave housing, gas network inside the house go into the kitchen, where we need the gas to a gas boiler, which will support solar thermal installation if this is not enough sometime.

3.3.5.4 Climate

Once the thermal study conducted, In our project we have chosen a climate made underfloor water in both housing and commercial premises.

The underfloor water is a consists of a network of pipes that will run inside the floor of our house, through them will circulate hot water, thereby increasing the soil temperature and heating housing.
Unlike radiators, in the case of floor heating surface it is much higher thermal emission, thus not require such high temperatures for the same heat output distribution.
This causes the temperature necessary to generate hot water for this system is less than 50°C, falling to about 30°C when run inside the soil pipe, thus avoiding cause circulatory problems in housing users .

http://www.garciaehijos.es/imagenes/promociones/suelo-radiante1.jpg

The use of low-temperature water has advantages in energy efficiency because heat losses are lower, and the system supports the use of certain technologies very efficient thermal generation (heat pump, solar energy ...)

The main drawback of such systems underfloor heating is the "speed" of it. If we are accustomed to radiator heating and boiler where soon after turning it started to notice the effect, we can feel a little disappointed with underfloor heating because heating "from scratch" is slower due to the temperature limitation that can reach the ground itself.
In the case of underfloor heating it becomes more important to have a little more advanced than a simple thermostat with a suitable driver can set it up so that we anticipate cold conditions and count control system at all times with a situation of comfort appropriate.

3.3.5.5 Plumbing

This section is divided into four parts, sanitation, rainwater, ventilation and installation of water.

Sanitation

For the installation of safety, connect all outputs of waste water each element of the housing complex in a siphon pot. Drain housing function is to prevent odor and gas pipes go down the drain without affecting the outflow. Then connect the downspout drain housing with sewage. With the toilet, we make an exception, because the toilet incorporates its own symphonic pot so the water out of the toilet will go directly to the pipe connected to the drain housing ba bath to sewage drainpipe.
These downspouts will go to the ground floor slab, and then go all the downpipes connecting to a horizontal pipe with a slope of 2%, called collector. In the union of the downspouts to the collector, we place a siphon manholes, which are few deposits that prevent odors passing through the pipes. At the end of the manifold, we place a recordable siphon valve box, and then come to the well of the onslaught of the public network.

Rainwater

For rainwater collection, place a drain on the deck of the 7th floor, and we cover the 6th floor, will be divided into 5 parts to hand collecting water according to regulations, which states that an area between 200m² and 500m², the minimum number is 4, so to us and we would fulfill.

Of the 6 downspouts that we created 5 pass through the inner courtyard. The sixth will go in the same area where the downspouts are located dampen residual baths housing C. The method of removal of water into the manhole of the pubic network exactamete be equal to the wastewater.

Ventilation

CYPE we calculate the rate of ventilation of each step of the house (doors and windows), in damp rooms. Besides the doors of the wet rooms will have a grid above the door for increased ventilation.
Once calculated, and seeing that met vents housing, especially in the wet rooms, which are the most demanding as ventilation areas.

Being the most demanding regulations also requires that there ventilation forced in damp rooms.
This has been solved by placing in each bathroom and each kitchen, a vent in the ceiling connected to a ventilation duct that ends in the terrace with a forced mechanical ventilation machine at each exit.

Extractors for the kitchen, part of the roof rack, take a conduit to a vertical line passing through all floors, different from before, which also ends in the terrace with a forced ventilation machine.

http://socalsheds.com/shed-options/ventilation.html

Installation of water

The flow gives us the water company, is regular and with enough pressure to properly receive all the elements of each home and business premises of the building.

The water received from the company, comes from the company network, the key to making, which leads the branch into our building. After entering the building, place another key to the building, which will serve us if there is a problem in the building in general power supply cut.

Before reaching the branch counters, there will be a check valve so that the water reaches us each housing a moderate pressure.
After accountants, accountants bifurcaremos branches to each of the houses. Upon arriving at the houses, which will have a key subscriber accessible only to users of the apartment, and then go to the different elements that need water, always putting a wrench in each of the premises where you will use the water, in our case, bathrooms, kitchens and laundries.

Also connect a branch to cover for connection with solar panels and get the hot water, and another branch to our gas heater to heat water by solar panels when it is not enough.

The distribution of both hot and cold water, will be made by copper pipes, distributed false ceiling in the horizontal sections, and together with the walls in the vertical sections

To produce hot water accumulator and electric heater exchanger that uses the heat of the solar panel will be installed.
For the distribution of hot and cold water will be made by copper pipes distributed false ceiling in horizontal sections and vertical sections will dock wall.

According to company ensures that water will have a regular flow rate and pressure sufficient

for that special installations are not necessary.
To produce hot water accumulator and electric heater exchanger that uses the heat of the solar panel will be installed.
For the distribution of hot and cold water will be made by copper pipes distributed false ceiling in horizontal sections and vertical sections will dock wall.

3.3.5.6 Electricity

The electrical installation must follow the low voltage regulation (REBT)
It consists of the rush, the protection and control box, the general picture of the interior installation and referrals. They carried boxes where the facility referral to the points of light, switches and sockets are divided.
All installation will draw schematically in planes, thereby differentiating elements that form; lighting, switches, switches and sockets bases.
Wiring run through corrugated PVC pipes for false ceiling in horizontal and vertical sections built by sections.

Our housing electricity facility will be divided into different circuits:

C1: Ilumination ⇨ Up to 30 units
C2: Taking ⇨ Up to 20 units
C3: Cook and Oven ⇨ 2 Units
C4: Washing machine, diswasher anf termo electrical ⇨ Up to 3 units
C5: Batheroom and help of kitchen ⇨ Up to 6 units
C6: Ilumination ⇨ More than 3o units
C7: Taking ⇨ More than 20 units
C8: Prevision electric heating ⇨ 5750W
C9: Prevision air conditioning ⇨ 5750W
C12: Prevision additional circuits C3, C4 or C5 more than 6 ⇨ C3: 2, C4:3, C5: 6 Units
C13: Elevator ⇨ 1

First we will draw the points of light and see that we have enough light, once it is correct, we will post these switches and join with a cable to the various switches and cables.
Finally we post the plugs depending on the circuit to which they belong.

3.3.5.7 Finishes

3.3.5.7.1 Plasters

Plaster for painting back, in all areas except humid areas of housing and shop

3.3.5.7.2 Tiled

In humid areas of housing and commercial space, we will make a tiled with ceramic plates fixed with mortar grip

Tiled Bathroom

Tiled kitchen

Tiled Bathroom: https://elmiradordelavega.wordpress.com/2009/12/16/fotos-de-alicatados-de-banos/

Tiled kitchen: http://fotos.habitissimo.es/foto/alicatados-de-cocinas_263137

3.3.5.7.3 Ceiling

We will have a false ceiling, which will serve for the passage of facilities in public areas, business premises and homes in transit areas, kitchens and bathrooms.
This will be subject to metal profiles

https://jimenezromero.files.wordpress.com/2013/02/img_1062-scaled1000.jpg

3.3.5.7.4 Pavement

We place a general flooring throughout the building, which consists of a floor of ceramic tiles fixed with mortar grip

http://www.reformasycocinas.com/suelos-para-cocinas/

3.3.5.7.5 Paint

Vertical walls painted with one coat of primer and two finish, shop and offices.
Box painted ladder and Portal Building, both in vertical and horizontal, with a coat of primer and two finish.

3.3.5.8 Carpentry

For carpentry we leave the current façade, and we want to keep all the style of the original façade.
We use carpentry inside, will be wood, following the line of the façade

3.3.5.9 Bathrooms

The plumbing consists of 3 parts, bath or shower, sink and toilet. All of the brand Roca.

4 CALCULATIONS

For calculations of both structures and facilities, we used the CYPE, CYPECAD program for calculating structures and CYPE MEP for calculating facilities.

First for any of the two parties, we introduce the data of the building and its location. (Soil, climate, ...)

For the calculation of structures, before drawing, we introduce charges having the building. First we draw the pillars, and then forged I-beams, each having plants, and in turn loads if any zone or element.
When we have it all drawn, we calculate and tell us whether the program complies with regulations or there are items that do not comply. Which we will have to change, and will be in size, armor or material.

When we calculated, we give foundations and the program gives us directly Adequate foundation for our building.

For the calculation of installations, also we begin to draw our building, and we will once introduced by the various facilities we want to make, to draw them.
Once drawn, and the program will calculate what we will say if they are correct and what are the dimensions of each required element.

In the following pages, they are some of the calculations of structures and facilities, with tables of their compliance with the European standards.

This is the documentation:

- Foundations and Structures:
  - Foundations Reports
  - Slab Reiforcemente
  - Beam Reiforcement report
  - Takeoff Tables
  - ULS

- Installations
  - Termic Study
  - Climate
  - Ventilation
  - Gas
  - Electricity

The results of the calculations, are attached in the Annexes to this Ithe project

5 CONCLUSIONS

CONCLUSIONS

ADVANTAGES
To maintain the façade, we maintain the composition of the latter, by that we mean that the thermal insulation is very good, as antigues edificion were very well insulated thermally

Greece is a seismic zone, so we've built a structure based on two-way slabs, which work equally on both axles. That makes the building remains better movement, and having a higher resistance

DISADVANTAGES
The biggest drawback of our building, is to make the distribution of space as to maintain the façade, the window openings are the same and can not locate anywhere.

Also, being in a rather central and busy area for cars (28th Street and October / Avda. Patission. The use of machinery is more complicated, and therefore, the cost is more expensive.

I work has been complicated in the sense that he had never used CYPE, and I had to go to use it while I was learning. A party who sometimes gave problems if not compatibility.
Otherwise I think it went well, maybe I would have been more perfect if there had been more time.

6 BIBLIOGRAPHY

- Notes EPSEB, UPC
- Eurocode 1, Eurocode 2, Eurocode 8, Eurocode 0
- KOR Normative
- Document of wind loads and snow loads of TEI Pireaus
- https://www.google.gr/url?sa=t&rct=j&q=&esrc=s&source=web&cd=8&cad=rja&uact=8&ved=0CD4QFjAH&url=http%3A%2F%2Frepositori.uji.es%2Fxmlui%2Fbitstream%2Fhandle%2F10234%2F76229%2FPFG%2BLCasado.pdf%3Bjsessionid%3DEDBA1677195F988CF9675B1CFEE1FBF5%3Fsequence%3D1&ei=tdaVVeG6IIaAU_rfouAO&usg=AFQjCNFm4WQyMPQup-xbjossBev6u7GXBQ&sig2=rkF3LF0f1aCG5B2uMfl8Pg&bvm=bv.96952980,d.d24
- http://www.construmatica.com/
- https://temariosformativosprofesionales.files.wordpress.com/2013/02/equipos-y-accesorios-de-instalaciones-de-gas.pdf
- http://www.soloarquitectura.com/
- http://comoconstruirtuvivienda.blogspot.gr/2013/05/pilares-de-hormigon-armado.html
- Software CYPE: CYPECAD, CYPE MEP
- Help CYPE:
    - http://www.soloarquitectura.com/
    - https://www.youtube.com/user/CYPESoftware