Índex

ÍNDEX 1

A. PATENTS ESTUDIADES. 5

A.1 US Patent 4,055,186: Anastomosis button, Harry H. Leveen; any 1977. 5

A.2 US Patent 4,598,712: Circular anastomosis, Rebuffat et al.; any 1986. 11

A.3 US Patent 4,470,415: Sutureless vascular anastomosis means and method, Wozniak; any 1984. 17

A.4 US Patent 5,344,059: Surgical aparatus and anvil delivery system therefor, Green et al.; any 1994..... 32

A.5 US Patent 6,193,129: Cutting blade for a surgical anastomosis stapling instrument, Bittner et al.; any 2001. 44

B. ESTUDI ESTADÍSTIC. 61

C. PLÀNOLS. 81

C.1 Índex de plànols. 81

ANNEX A: Patents estudiades.

A. Patents estudiades.

A.1 US Patent 4,055,186: Anastomosis button, Harry H. Leveen; any 1977.

United States Patent [19]
Leveen

[11] **4,055,186**
[45] **Oct. 25, 1977**

[54] **ANASTOMOSIS BUTTON**

[76] Inventor: **Harry H. Leveen**, 800 Poly Place, Brooklyn, N.Y. 11209

[21] Appl. No.: **657,205**

[22] Filed: **Feb. 11, 1976**

[51] **Int. Cl.**[2] **A61B 17/04**
[52] **U.S. Cl.** ..... **128/334 C**
[58] **Field of Search** ..... 128/334 R, 334 C

[56] **References Cited**

U.S. PATENT DOCUMENTS

3,771,526	11/1973	Rudie	128/334 C
3,974,835	8/1976	Hardy, Jr.	128/334 C

FOREIGN PATENT DOCUMENTS

357,306	8/1922	Germany	128/334 C

OTHER PUBLICATIONS

Narter et al., "An Experimental Method of Nonsuture Anastomosis of the Aorta", IN Surgery, Gynecology and Obstetrics 119[2]:362-364, 1964.

Primary Examiner—Channing L. Pace
Attorney, Agent, or Firm—Brooks, Haidt, Haffner & Delahunty

[57] **ABSTRACT**

An anastomosis button formed of a pair of axially engaged complementary clamping members, each clamping member includes a hub and a crown. The crown includes a clamping collar which is coaxially positioned about and spaced outwardly of the hub medially along the length of the hub and a plurality of spring leaves which are spaced apart and attached at one set of ends to the hub and at the other set of ends to the clamping collar.

6 Claims, 8 Drawing Figures

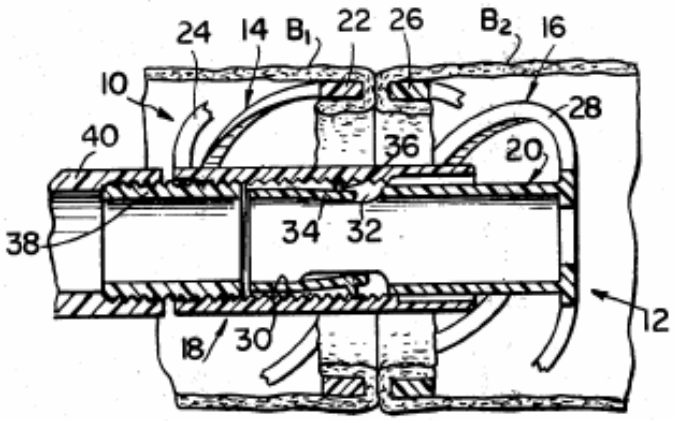

U.S. Patent Oct. 25, 1977 Sheet 1 of 2 4,055,186

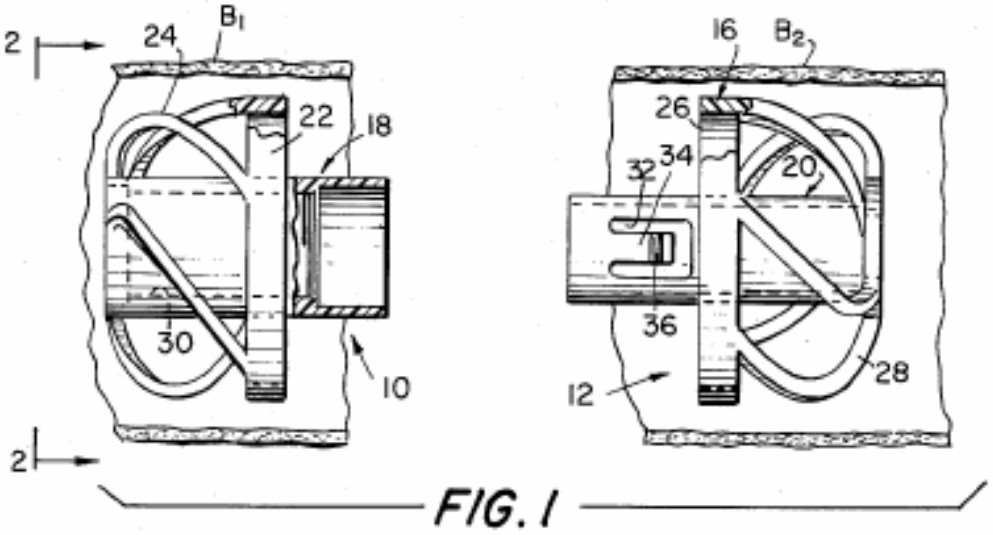

FIG. 1

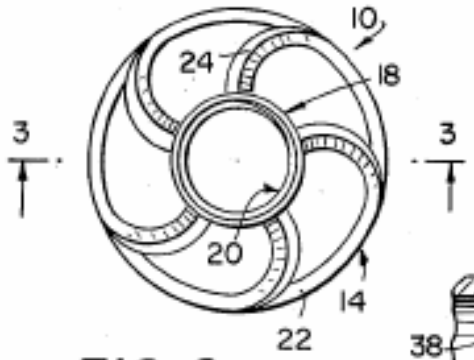

FIG. 2

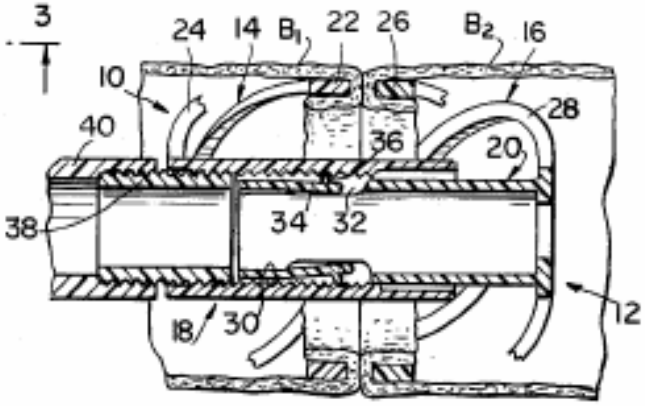

FIG. 3

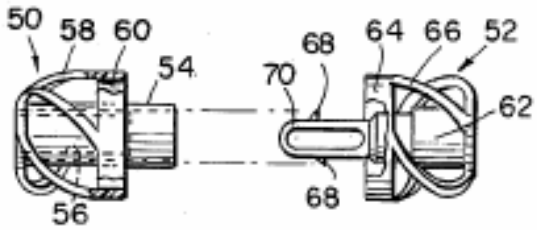

FIG. 4

U.S. Patent Oct. 25, 1977 Sheet 2 of 2 4,055,186

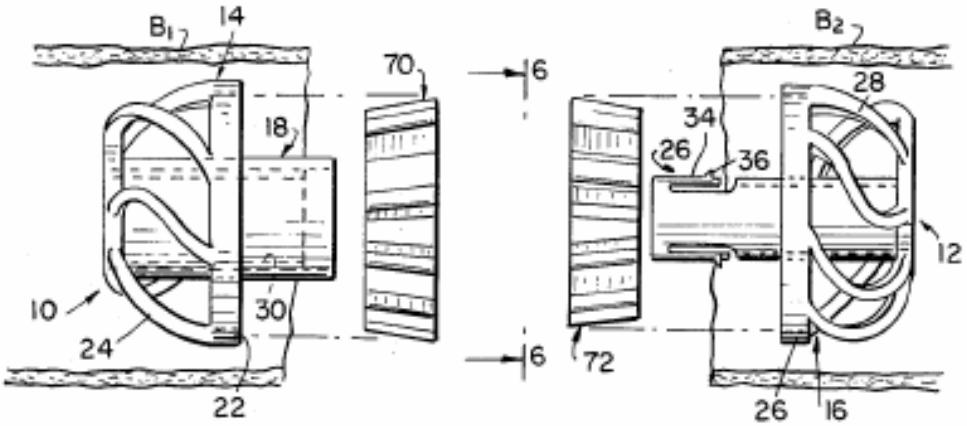

FIG. 5

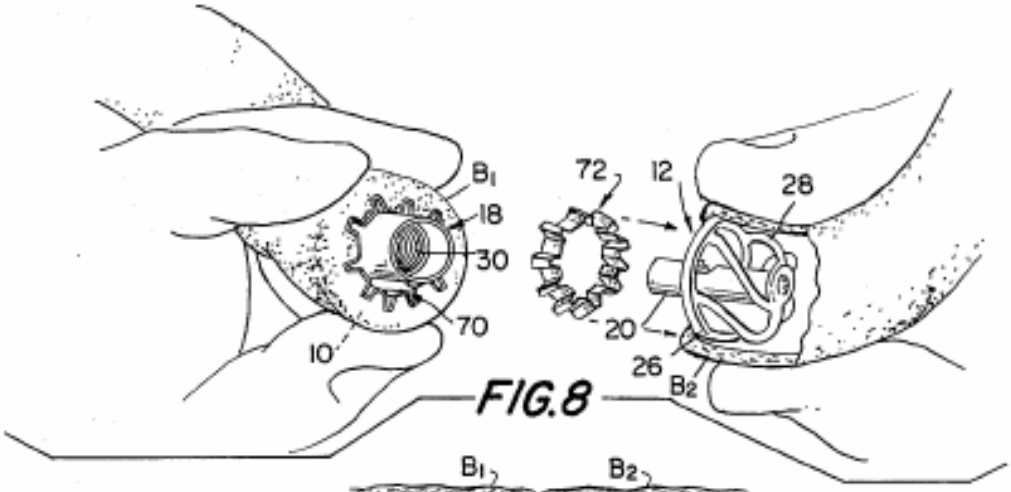

FIG. 8

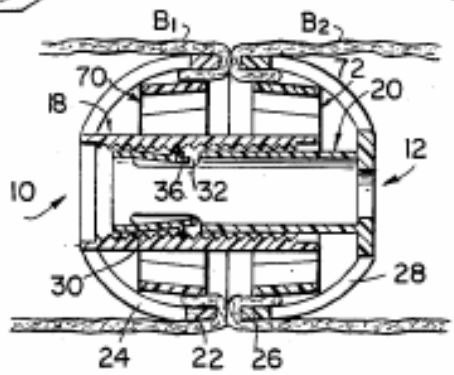

FIG. 7

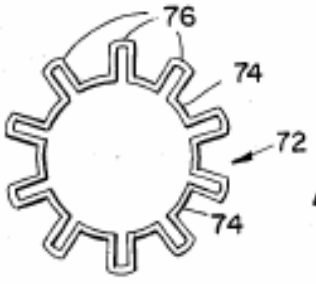

FIG. 6

ANASTOMOSIS BUTTON

This invention relates to anastomosis of the bowel and in particular provides a new anastomosis button construction.

It is frequently necessary during the course of surgery to remove a segment of the intestines. When this is done, the opened ends of remaining bowel must be joined so that intestinal continuity is reestablished This is best accomplished by an inverting type of anastomosis. In this type of anastomosis, the serosa of the bowel is turned inward so that the contact of the two pieces of bowel is established on their outer, i.e., serosal, surface. The anastomosis is said to be serosa to serosa. Although this anastomosis can be accomplished by suture, it would be quicker and easier if some form of intenstinal prosthesis were available to hold the joined edges together.

John B. Murphy first devised an appliance (anastomosis button) which could be inserted into the lumen of the bowel to hold the edges in proximity while healing occurred. (*Murphy, J.B.*, Cholecysto-intestinal, gastrointenstinal, entero-intestinal anastomosis and approximation without sutures. The Chicago Medical Recorder 3:803-840 1892). Subsequent experience with Murphy's device disclosed that the device was occasionally retained because the compression which the device was supposed to exert on the tissue was insufficient to bring about necrosis. The release of the device did not occur without necrosis of the spur that was holding it, therefore, it did not pass out of the intestinal tract. Also Murphy's device had only a small central lumen and occasionally intestinal obstruction resulted. For these reasons, the device was largely abandoned although some have continued its use in low rectal anastomosis after colonic resection.

It is thus a primary object of this invention to provide an anastomosis button which will obviate these difficulties.

An investigation was made as to the mechanism of intestinal obstruction produced by intraluminal objects. Intraluminal objects of large diameter would pass through the intestinal tract without producing intestinal obstruction providing that the object was permiable to gas and fluid. If fluid and gas were unable to pass though the intraluminal object, the proximal bowel was dilated by an accumulation of gas and liquid. This dilation obliterated the propulsive force of intestinal peristalsis, and resulted in intestinal obstruction with failure of the object to pass. The ideal device should be of simple construction and the design must be of an open mesh work to avoid intestinal obstruction.

In accordance with this invention an anastomosis button is formed of a pair of axially engaged complementary clamping members. Each clamping member includes an integral hub and crown in which the hub axially mates and engages the complementary hub on the other clamping member. The crown includes a clamping collar which is coaxially positioned about and spaced outwardly of the hub medially along the length of the hub and a plurality of spring leaves which are spaced apart and attached at one set of ends to the hub and at the other set of ends to the clamping collar. Preferably the leaves are spiral in form. The two clamping members are brought together with two pieces of bowel to be joined in a conventional manner positioned over the clamping members and around the confronting edges of the clamping collars as the clamping members

are axially engaged. The spacing of the clamping collars outwardly of the hubs is obstructed only by the hubs and spring leaves such that passage of fluids and gases through the bowel is relatively unobstructed. At the same time the spring leaves which are spaced at arcuate intervals about the hub and collar apply even pressure under slight compression to hold the clamping collars together with the bowel between them until agglutination takes place.

When utilized for intraluminal anastomosis of the intestines, the device of this invention has the following advantages: It is rapid. No intraluminal spur results as in sutured anastomosis from turning in too much bowel. The anastomotic site appears almost identical to the adjacent bowel, and the union cannot be visualized on gross inspection of thw bowel.

The device of this invention is preferably manufactured of synthetic thermoplastic material and is of unitary design making it possible to injection mold the two pieces. The axial engagement of the hubs is preferably rotationally disengageable such that after the two pieces are engaged by pushing them together, the two pieces can be disengaged only by screwing them apart. Preferably, a ratchet on one piece operates on a conventional screw thread on the other, as in the original Murphy button.

The integral compression spring leaves are molded into the stucture of the device so that adequate compression is maintained at all times on the two opposing pieces of bowel which insures that the septum being compressed will pinch itself off and release the internal device for passage down the intenstinal tract. The device thus preferably utilizes an open spiral lattice spring which is easily compressed and makes appropriate pressure on the bowel septum which is compressed between the two members. This open lattice work spring offers no solid obstruction to the passage of fluid and gas through the intestinal lumen. The device can be constructed of a plastic which is softened by the intenstinal ferments, although this is not an essential factor since a device constructed of rigid plastic readily passes through the intestinal tract.

For a more complete understanding of the practical application of this invention, reference is made to the appended drawings in which:

FIG. **1** is an enlarged, partially sectioned view of a portion of the bowel showing the two parts of an anastomosis button in accordance with this invention as they are initially positioned in the cut confronting portions of the bowel;

FIG. **2** is an end view of the portion of the device of this invention as seen from line **2—2** in FIG. **1**;

FIG. **3** is a section taken along line **3—3** in FIG. **2** after the device of the invention has been pushed together to hold the cut ends of bowel with their serosal surfaces in contact;

FIG. **4** is a view of another device in accordance with this invention which is particularly suitable in joining small bowel portions;

FIG. **5** is a view similar to FIG. **1** illustrating a device useful in conjunction with the anastomosis button, particularly in bowels of large diameter for aiding in securing the cut ends of the bowel about the anastomosis button parts;

FIG. **6** is an end view of the added device;

FIG. **7** is a view of the arrangement shown in FIGS. **5** and **6** which is similar to FIG. **3**; and

FIG. **8** is a perspective view illustrating joining the cut ends of the bowel using the devices of FIGS. **5, 6,** and **7.**

Referring particularly to FIGS. **1–3,** an anastomosis button in accordance with the present invention consists of two separate, integrally molded clamping members **10** and **12.** Each clamping member **10** and **12** basically includes a crown portion **14** and **16,** respectively, and a tubular hub **18** and **20,** respectively.

As seen in FIG. **1,** crown portion **14,** which includes a clamping collar **22** and a series of five spirally shaped spring leaves **24,** is attached to the left end of hub **18.** Similarly, crown **16,** which includes a clamping collar **26** and a series of five spirally shaped spring leaves **28** is secured to the right end of tubular hub **20,** as seen in FIG. **1.**

Each clamping collar **22** and **26** is in the form of a short cylindrical section of substantially larger diameter than its respective tubular hub **18** and **20** and is positioned coaxially about its respective hub spaced outwardly therefrom and centrally therealong. Spring leaves **24** and **28** are disposed at equal arcuate intervals about their respective hubs **18** and **20** at the ends thereof to which they are secured and extend radially and spirally to their respective clamping collars **22** and **26.** Each series of spring leaves **24** and **28** thus forms a spiral latticework which permits the respective clamping collar **22** and **26** to be moved under the resilient biasing of spring leaves **24** and **26** axially toward the end of the respective hub **18** and **20** such that the spiral latice of spring leaves **24** and **26** forms a compression spring. By reason of the arcuate spacing of spring leaves **24** and **26,** both about the end of hubs **18** an **20** and about clamping collars **22** and **26,** the compressing stress is uniformly distributed about clamping collars **22** and **26.**

Tubular hub **18** on clamping member **10** is open-ended and contains a medial tapped portion **30** which can be best seen in FIG. **3.** Tubular portion **20** on clamping member **12** is also open-ended and has an outside diameter just less than the minor diameter of the threads in tapped portion **30** of hub **18.** Hub **20,** toward its left end as seen in FIG. **1,** is provided with a pair of diametrically opposed U-shaped slots **32** which define a pair of leaves **34** formed of the wall section of hub **20** which are located near the left end of hub **20** and have their free ends extending toward the middle of hub **20.** Leaves **34** carry pawls **36** near their free ends which extend outwardly above the outside wall of hub **20** and are positioned to engage the threads of tapped portion **30** of hub **18** when clamping members **10** and **12** are pushed together axially from the position shown in FIG. **1** to the position shown in FIG. **3.** The engagement of pawls **36** with tapped portion **30** is that of a ratchet upon axial engagement of clamping members **10** and **12,** but that of a threaded when disengaging the clamping halves by rotation. It will be noted particularly with reference to FIG. **3** that pawls **36** are offset lengthwise of hub **20** accommodate the half-turn of the threads in tapped portion **30** and thus assure that both pawls **36** will engage the threads of tapped portion **30** simultaneously, despite the diametrically opposed disposition of pawls **36.**

As will be evident on viewing FIGS. **1** and **3,** clamping members **10** and **12** are utilized in anastomosis of the cut ends of bowel sections B_1 and B_2, respectively, by positioning each clamping member **10** and **12** in the end of a bowel section B_1 and B_2 in a position such that the clamping rings **22** and **26** confront each other. The ends of bowel sections B_1 and B_2 are then pulled across the confronting edges of clamping rings **22** and **26,** and clamping members **10** and **12** are then pushed toward each other with bowel section B_1 and B_2 firmly in position such that hub **20** has its left end as seen in FIG. **1** inserted into the right end of hub **18** to a point where the serosa of bowel sections B_1 and B_2 overlying the edges of clamping rings **22** and **26** are in contact.

At this point, the location of pawls **36** is such that they have engaged the threads on tapped portion **30.** Clamping members **10** and **12** are then pushed closer toward each other to cause pawls **36** to move deeper into tapped portion **30.** To facilitate this, leaves **34** bend inwardly to permit pawls **36** to pass the crests of the threads in portion **30** and then move outwardly to push pawls **36** into the troughs of the threads in the fashion of a ratchet. As clamping heads **10** and **12** are moved closer together, spring leaves **24** and **28** flex yieldingly to compress such that clamping rings **22** and **26** apply increasing pressure against each othr, pushing the serosa of bowel sections B_1 and B_2 into form contact.

It will be apparent that clamping members **10** and **12** should be made of material which will have the required physical properties to permit the necessary compression of spring leaves **24** and **28** and of spring leaves **34** and of sufficient stiffness such that substantial pressure can be generated between the confronting edges of clamping rings **22** and **26** when clampng members **10** and **12** are pushed together. A particularly suitable material is polyacetal resin which not only has the requisite physical properties but is relatively inert chemically, is non-toxic, and is amenable to adequate sterilization.

The device illustrated with reference to FIGS. **1–3** is particularly suitable for anastomosis of bowel sections of intermediate size and typically has an outside diameter of clamping rings **22** and **26** on the order of one inch, an outside diameter of hub portion **18** of one-half inch, an inside diameter of clamping rings **22** and **24** of seven-eights of an inch, and an inside diameter of hub portion **20** of one-quarter inch.

In low lying rectal anastomosis, a nipple **38** can be threaded on to the end of clamping member **10** by engagement with tapped portion **30,** and a flexible tube **40** can be attached to the nipple. The tube **40** can be made to protrude through the anus and can be connected to suction to ensure adequate decompression of the bowel in the region of the anastomosis.

Referring to FIG. **4,** there is shown a modification for providing axial engagement of a pair of clamping members **50** and **52** which is particularly suitable for small diameter bowel sections.

Generally, clamping member **50** is constructed like clamping members **10,** being provided with an open-ended tubular hub **54** having an internal tapped portion **56** and a crown including spiral spring leaves **58** and a clamping ring **60,** which is positioned spaced outwardly of and coaxially along hub **54** by means of spring leaves **58.** Clamping member **52** similarly has a hub **62,** a clamping ring **64,** which is positioned coaxially along hub **62** and spaced outwardly therefrom by means of spring leaves **66.** However, because of the small diameters involved, hub **62** is solid rather than tubular, and supports a pair of pawls **68** for engagement with the tapped portion **56** on an elongated loop **70** which extends from hub **62** in a generally axial direction.

The use of the anastomosis button formed of clamping members **50** and **52** is generally the same as described with reference to clamping members **10** and **12**.

In dealing with anastomosis of bowel sections of relatively large diameter, the positioning of the cut ends of the bowel section over the clamping rings of the clamping members is facilitated by the use of spreader rings **70** and **72** which is generally illustrated in FIGS. **5, 6, 7,** and **8.**

Referring particularly to FIGS. **5** and **7,** an anastomosis button is shown having clamping members essentially the same in construction as clamping members **10** and **12,** except that the device is intended for larger diameter bowel sections and accordingly clamping members **10** and **12** are provided with six spring leaves each to support the clamping rings. For convenience in understanding, the same reference numerals have been used to designate the clamping members and their parts as were used with reference to FIGS. **1, 2,** and **3.** In this arrangement, however, there is added, associated with each clamping member **10** and **12,** a bowel positioning element in the form of a spreader ring **70** and **72,** respectively.

Each ring **70** and **72** is generally annular, corrugated radially and tapered lengthwise. Preferably, it is formed of a relatively flexible material, such as polyethylene. Referring more particularly to element **72,** which is shown in elevation in FIG. **5,** and in plan in FIG. **6,** element **72** is a single piece of relatively thin wall section having an inner frustoconical wall **74** interrupted at arcuate intervals by radially outstanding corrugations **76.** The inside cross dimension of element **72,** approximating a minor diameter if it were cylindrical, is substantially larger than the outside diameter of axial hub **18.** While the outside cross dimension, approximating the outside or major diameter of element **72** if it were cylindrical, is just less than the inside diameter of clamping rings **22** and **26.**

Spreader rings **70** and **72** are used in conjunction with clamping members **10** and **12,** respectively to hold the cut ends of bowel sections to be joined firmly in position in each clamping member **10** and **12.** Thus, referring to FIG. **8,** for example, a bowel section B_1 has had a clamping member **10** positioned at its cut end, as described with reference to FIGS. **1-3.** In addition, a spreader ring **70** has been pushed, leading with its tapered end, over hub **18** to force the ends of bowel section B_1 around clamping ring **22.** As can be seen in FIG. **8,** spreader ring **72** is similarly pushed into clamping member **12** over hub **20** to position the cut end of bowel section B_2 similarly over clamping ring **26.** The two clamping members **10** and **12** are then pushed together as described above to bring the serosal surfaces of bowel sections B_1 and B_2 into firm contact. The use of spreader rings such as rings **70** and **72** is particularly desirable with larger diameter bowel sections, for example, on the order of an inch and a half, as the spreader rings aid in holding the inwardly turned ends of the bowel section out of the way to permit passage of fluids between the clamping rings and hubs of the anastomosis button clamping members.

I claim:

1. A clamping member for axial engagement with a complementary clamping member to form an anastomosis button, said clamping member including a hub and a crown, said hub including axial guiding and engaging means for axially mating and engaging a complementary hub on a said complementary clamping member, and said crown including a clamping collar coaxially positioned about and spaced radially outward of said hub medially located therealong and a plurality of resilient, flexible spring leaves spaced apart and attached at one set of ends thereof to said hub member at intervals thereabout to one side of said clamping collar, said leaves extending radially outward and lengthwise of said hub and said leaves being attached at the other set of ends thereof to said clamping collar at arcuate intervals thereabout.

2. A clamping member according to claim **1** in which said hub is an open-ended tube.

3. A clamping member according to claim **1** in which said plurality of spring leaves are spiral in form.

4. A clamping member according to claim **2** which further includes a flexible tube extending into said hub through the open end thereof and fastened therein.

5. A clamping member according to claim **1** for receiving a cut end of a bowel section positioned thereover and extended inwardly over said clamping collar, and a spreader ring positioned between said hub and said collar for outwardly pressing said cut end of said bowel section against the inner side of said collar.

6. The combination according to claim **5** in which said spreader ring is formed of relatively flexible material as a single piece of relatively thin wall section having an inner wall interrupted at arcuate intervals by radially outstanding corrugations.

* * * * *

A.2 US Patent 4,598,712: Circular anastomosis, Rebuffat et al.; any 1986.

United States Patent [19]

Rebuffat et al.

[11] **Patent Number: 4,598,712**

[45] **Date of Patent: Jul. 8, 1986**

[54] **CIRCULAR ANASTOMOSIS**

[76] Inventors: **Carlo Rebuffat**, Via Galilei, 17, Trento; **Riccardo Rosati**, Via Livorno, 4, Milano, both of Italy

[21] Appl. No.: **701,207**

[22] Filed: **Feb. 13, 1985**

[30] **Foreign Application Priority Data**

Feb. 16, 1984 [IT] Italy 19652 A/84

[51] **Int. Cl.**[4] **A61B 17/04**

[52] **U.S. Cl.** ..... **128/334 C**; 128/334 R

[58] **Field of Search** ..... 128/334 R, 334 C, 346, 128/303 R, 305; 285/382.4, 382.5, 260

[56] **References Cited**

U.S. PATENT DOCUMENTS

772,136	10/1904	Dossert	285/382.4
3,759,553	9/1973	Carter	285/260
3,974,835	8/1976	Hardy, Jr.	285/260
4,055,186	10/1977	Leveen	128/334 C
4,469,356	9/1984	Duret et al.	285/382.5
4,470,415	9/1984	Wozniak	128/334 C

Primary Examiner—Gene Mancene
Assistant Examiner—David I. Tarnoff

[57] **ABSTRACT**

A new device for the anastomosis of hollow organs to be used by means of a suitable mechanical circular anastomotic gun, is described consisting essentially in three elements fixed one inside the other, and compressing between two of them the tissue edges of the hollow dissected organs, thus enabling the natural sealing of a suture between the organs themselves.

5 Claims, 13 Drawing Figures

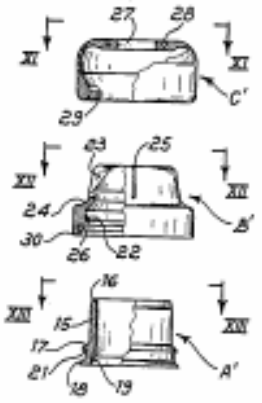

U.S. Patent Jul. 8, 1986 Sheet 1 of 2 4,598,712

Fig. 1

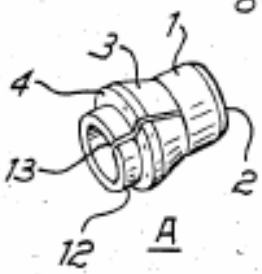

Fig. 2

Fig. 3

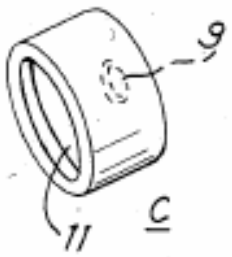

Fig. 4

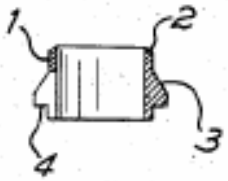

Fig. 6

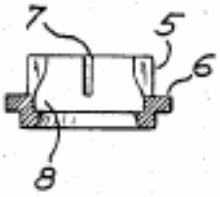

Fig. 8

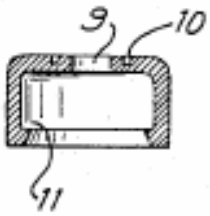

Fig. 5

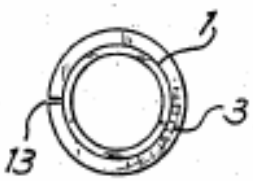

Fig. 7

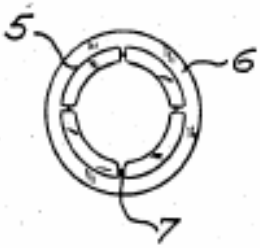

Fig. 9

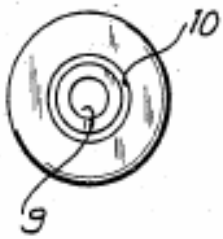

U.S. Patent Jul. 8, 1986 Sheet 2 of 2 4,598,712

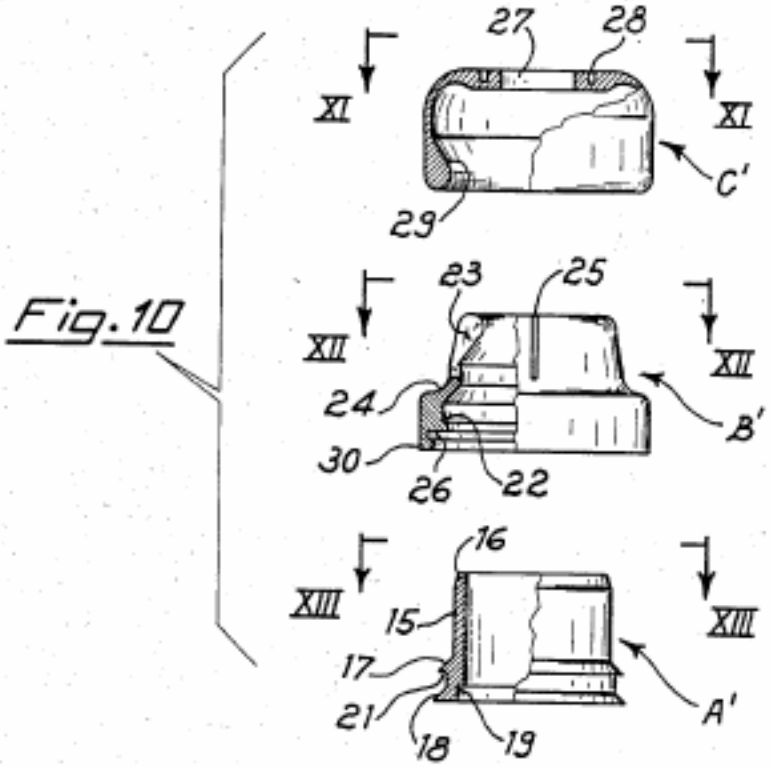

Fig. 10

Fig. 11

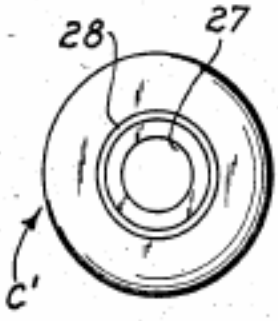

Fig. 12

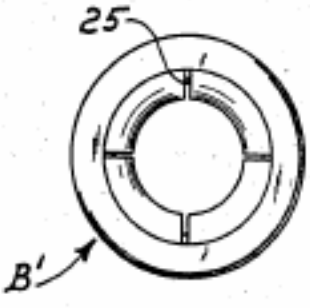

Fig. 13

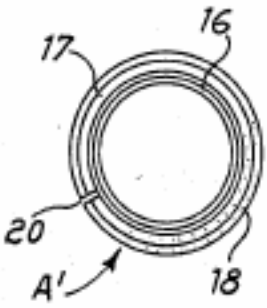

CIRCULAR ANASTOMOSIS

BACKGROUND OF THE INVENTION

The subject of the present invention is a new device for the circular anastomosis of hollow organs which makes the anastomosis compressing between two of its fixed elements the ends of the organs to be connected.

More in particular the device of the invention consists in three elements so formed to be fixed one inside the other and forming a single body with compressed between its walls the edges of the tissues of the hollow organs to be anastomosed. Protracted compression necrotizes the tissues, causing their subsequent departure together with the positioned device, after a period of time long enough so that a natural suture occurs between the mating edges of the hollow organs free ends, immediately out of the area where the compression is applied.

The techniques of mechanically performing the anastomosis of hollow organs, in the majority of the cases, utilize circular mechanical staplers, which perform the connection of the dissected hollow organs tissue edges by means of metallic staples.

It is also known a circular mechanical device the operation of which substantially differs from that of the stapling device by performing the anastomosis compressing the edges of the tissues to be connected. The compression of the tissues of organs to be joined is performed between the plane surfaces of two coaxial drilled rings, which are kept one to the other in tighten position by means of a number of metal pins and small springs coaxial with the metal pins. After a certain number of days, as the tissue compressed between the rings necrotize, the compression device separates from the hollow organ edges where the suture has by then naturally occurred and consequently it is removed in natural way.

SUMMARY OF THE INVENTION

The device of the present invention which is new both as to its whole aspect and constituting elements, even if it achieves the anastomosis of the two free ends of a dissected organ by compression as by the above mentioned known device, when compared to the same it shows undoubted advantages such as an extreme simplicity of the constituting element construction, manufacturing costs, and the possibility to have all the elements made of any suitable material such as plastic or even biodegradable material.

DETAILED DESCRIPTION OF THE INVENTION

The accompanying drawings of FIGS. **1** to **13** refer to the preferred embodiment of the invention device, but they should be not considered limiting the scope of the same. One of these preferred embodiments is represented by FIGS. **1** to **9**, where:

FIG. **1** is a perspective view of the element A, which is driven by a suitable mechanical circular anastomotic gun into the element B, represented in FIG. **2**, when the latter is already positioned inside the element C, represented in FIG. **3**.

FIGS. **4** and **5** are a sectional view and a top view of element A respectively.

In said element A are recognized a cylindrical portion **1** having a beveled end **2**, a conical portion **3** and an abutting part **4**. The cylindrical portion **12**, under the

abutting part **4** and the abutting part **4** itself may be longitudinally crossed by a cutting **13** suitable to facilitate insertion of A into B.

FIG. **2** is a perspective view of the element B which is driven into the element C, represented in FIG. **3**, by means of a suitable mechanical circular anastomotic gun.

FIGS. **6** and **7** are a sectional view and a top view of element B respectively.

In said element B is recognized a portion **5** which is externally cylindrical and internally conical because of its different thickness, thin towards the abutting part **6** and thick towards the other end. This reduced thickness of the portion **5** towards its base delimited by the abutment **6**, as well as some longitudinal cuttings **7** which make the portion **5** divided in segments, makes the portion **5** itself resilient to the internal stress of the element A when inserted.

In FIGS. **6** and **7**, referred to a particular embodiment of the invention, are represented four longitudinal cuttings, which make the portion **5** subdivided in four segments.

In the base internal conical portion of element B, is obtained a slot **8** for abutment with the part **4** of the element A, when the latter is urged by a suitable circular mechanical anastomotic gun.

FIG. **3** is a perspective view of the element C, which when the assembly of the device is complete, contains the elements A and B and all together form a single body.

FIGS. **8** and **9** are a sectional view and a top view of element C, respectively.

In said element C is present an axial part **9**, through which the element C is pivotally connected to a suitable circular mechanical anastomotic gun; a groove **10** to facilitate separation of the device, formed by the three elements assembled together, from the circular mechanical anastomotic gun, at the moment when the latter is removed from the organism.

In the internal side of element C is obtained a slot **11** to facilitate the extension of the sements of portion S of the element B when it is subjected to the pressure of the inserted element A.

An alternative embodiment of the device of the invention is shown by the drawings in FIGS. **10–13**, where

FIG. **10** is a side view, partially in section along the planes XI—XI, XII—XII and XIII—XIII of elements A', B' and C' respectively constituting the device, and

FIGS. **11**, **12** and **13** are top view of the same elements respectively.

In the element A' are recognized a cylindrical portion **15** having a beveled end **16** and two conical portions **17** and **18** having different diameters, being bigger the one of the conical portion **18**, and an abutting part **19** on which urges a movable element of a suitable circular mechanical anastomotic gun. The two conical portions **17** and **18** and partially the cylindrical portion **15** show longitudinal cutting **20** making the element A' more resilient thus facilitating its insertion into the element B'. The conical portion **17** shows an abutting part **21** that during the assembling intermediate phase of the compression device mates the abutting portion **22** of the element B'.

In said element B' is recognized a portion **23** which is externally cylindrical and internally conical because of its different thickness, thin towards the abutting part **24**

and thicker towards the other end. This reduced thickness of the portion **23** towards its base delimited by the abutment **24**, as well as some longitudinal cuttings **25** which make the portion **23** itself divided in segments, renders the portion **23** itself resilient to the internal stress of the element A' when inserted. In the drawing, referred to a specific embodiment of the invention, are indicated four longitudinal cuttings making the portion **23** subdivided in four segments. But these cuttings may be present also in a higher number, particularly six or eight.

In the base internal conical portion of element B', is obtained a slot **22** for abutment with the part **21** of the element A' when the latter is urged by a suitable circular mechanical anastomotic gun. In the internal lower base of the element B' is obtained a circular slot **26** and below a circular rib **30** for a proper abutting with the axial fixed element of a suitable circular mechanical anastomotic gun.

In the element C' is present an axial port **27** through which the element C' is pivotably connected to a suitable circular mechanical anastomotic gun; a groove **28** to facilitate separation of the device, formed by the three elements assembled together, from the circular mechanical anastomotic gun, at the moment when the latter is removed from the organism. The internal side **29** of the element C' is shaped for mating the outer walls of the resilient movable portions **23** of the element B' when it is subjected to the pressure of the inserted element A'.

Description of the use of a device according to the invention in practically carrying out an anastomosis of hollow organs, is given hereinafter: such description is particularly referred to the use of the device illustrated in FIG. **1–9** but it is intended to be referred also to any other possible embodiment according to the invention.

In use a suitable circular mechanical anastomotic gun carrying the device of the invention is introduced into the dissected hollow organ whose free ends proximal to the dissection area are to be anastomosed. One purse-string suture, placed on the edge of the free end of the dissected organ around the circular mechanical anastomotic gun, is tightened around the central pivot of the gun, immediately above the area where it is positioned the element B of the device according to the invention. The head portion end of the circular mechanical anastomotic gun on which the element C is supported, is then introduced into the other free end of the hollow organ proximal to the area where dissection has been performed and another purse-string suture placed on the edge of the hollow organ free end is tightened around the central pivot of the circular mechanical anastomotic gun below the element C.

The circular mechanical anastomotic gun is then operated and the elements B and C, each contained inside a free end of the dissected hollow organ by means of a purse-string suture, are drawn nearer.

The particular shape of the elements B and C makes possible that, on assembling, the tissue edges bend inwardly the elements itselves, so that when the circular mechanical anastomotic gun is closed, the two free ends of the hollow organ to be anastomosed have the bend edges mating on the upper part of B and the lower part of C, respectively.

The element A is then urged by the circular mechanical anatomotic gun and it causes the assembling of the element B into C by expanding the resilient segments **5** and following abutting of element B in the slot **11** of element C, while the element A itself gets fixed inside the element B by engagment of the abutment **4** against the slot **8**.

The device consisting of the three elements A, B and C now firmly assembled each other, is then disengaged from the circular mechanical anastomotic gun by cutting along the prearranged groove **10** on the element C after the edges of the purse-string sutures have been severed.

The tissues of the so joined organs are compressed between the inner walls of the element C and the resilient segment walls of the portion **5** of the element B to which is applied a pressure from element A firmly positioned; because of this compression, the tissues necrotize and after a certain period of time they separate and are removed along with the tightened device in natural way. The period of time necessary to the tissues to necrotize and be removed is anyway longer then the time necessary to the tissue edges, which are kept in mating position on the lower part of the tighten device, the naturally heal together thus completing the anastomosis.

When it is used the device according to the embodiment illustrated in FIG. **10–13**, in the end phase of the operation, the element A is urged completely inside the element B' and during this movement the conical portion **18** of the element A' forces the abutting part **22** of the element B' causing the extending of the circular rib **30** of the element B' and consequently its separation from the circular mechanical anastomotic gun support. By using said device constituted by the assembly of the element A', B' and C', it is possible to obtain, after the anastomosis has been performed, an easier separation of the suture device from the circular mechanical gun.

What we claim is:

1. Device for circular anastomosis of hollow organs, which comprises three coupling elements capable of being engaged one inside the other, the first element being placed in a first hollow organ and constituting an outer element of hollow cylindrical shape and having an upper face through which is formed an axial port, said face being provided with an annular grave spaced from said axial port, the inside surface of said first element being provided with an inwardly directed mating surface close to its lower end; the second element being placed in a second hollow organ and constituting an intermediate element of hollow cylindrical shape and provided with multiple, longitudinal slots extending through upper walls thereof and therebelow with a rim forming an abutment, the inside of said second element being provided near the lower end thereof with an annular slot and the wall thickness thereof being reduced in a region above said abutment said first and second hollow organs having their respective free ends being positioned between said inside surface of said first element and said upper walls of said second element when said second member is engaged inside of said first element; the third element also being placed in said second hollow organ and constituting a hollow inner element having a cylindrical portion and a conical portion therebelow forming an abutment for engaging the inside of said intermediate element, thereby expanding said upper walls of said second element towards said inside surface of said first element in order to compress said free ends of said first and second hollow organs together.

2. Device according to claim 1, wherein the cylindrical portion of said inner element is beveled at the upper end thereof.

3. Device according to claim 1 wherein the conical portion of said inner element and the cylindrical portion thereof are provided with a longitudinal slot to impart resiliency to the element.

4. Device according to claim 1, wherein said inner

element is provided with two conical portions the diameter of the lower conical portion being larger than that of the upper conical portion.

5. Device according to claim 4, wherein said two conical portions and said cylindrical portion are provided with a longitudinal slot to impart resiliency to the element.

* * * * *

A.3 US Patent 4,470,415: Sutureless vascular anastomosis means and method, Wozniak; any 1984.

United States Patent [19]
Wozniak

[11] **Patent Number: 4,470,415**
[45] **Date of Patent: Sep. 11, 1984**

[54] **SUTURELESS VASCULAR ANASTOMOSIS MEANS AND METHOD**

[75] Inventor: **John J. Wozniak**, Columbia, Md.

[73] Assignee: **The Johns Hopkins University**, Baltimore, Md.

[21] Appl. No.: **409,367**

[22] Filed: **Aug. 19, 1982**

[51] **Int. Cl.**³ **A61B 17/04**

[52] **U.S. Cl.** ..... **128/334 R**; 128/334 C; 29/447; 29/DIG. 35

[58] **Field of Search** ..... 128/334 C, 334 R; 604/405, 408–410, 262; 29/DIG. 35, 447

[56] **References Cited**

U.S. PATENT DOCUMENTS

1,151,300	8/1915	Soresi	128/334 C
3,316,914	5/1967	Collito	128/334 C
3,606,888	9/1971	Wilkinson	128/334 C
3,774,615	11/1973	Lim et al.	128/334 C
3,781,969	1/1974	Anderson	29/447
3,800,403	4/1974	Anderson et al.	29/447
3,908,662	9/1975	Razgulov et al.	128/334 C
4,169,477	10/1979	Bokros	128/334 R
4,379,009	4/1983	Shibata et al.	29/447

Primary Examiner—C. Fred Rosenbaum
Assistant Examiner—Gene B. Kartchner
Attorney, Agent, or Firm—Robert E. Archibald; H. Donald Nelson

[57] **ABSTRACT**

A means and method for sutureless surgical anastomosis. A heat shrinkable sleeve is placed around two tubular members to be anastomosed and then shrunk to engage and maintain the two tubular members in an anastomotic relationship. The ends of the tubular members are everted over rigid or semi-rigid ferrules placed on the ends of the tubular members.

54 Claims, 30 Drawing Figures

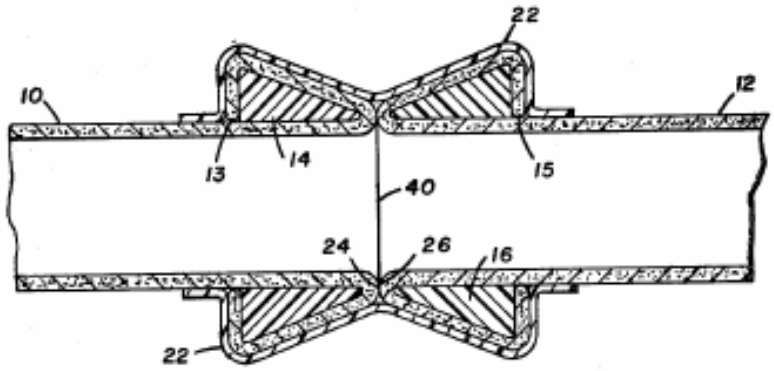

U.S. Patent Sep. 11, 1984 Sheet 1 of 6 4,470,415

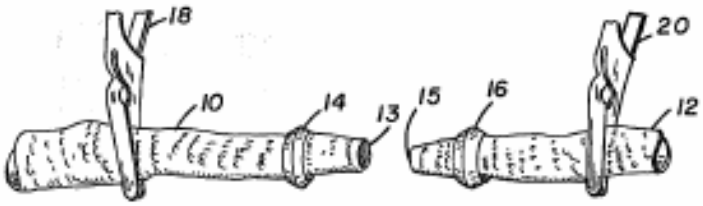

FIG. 1A

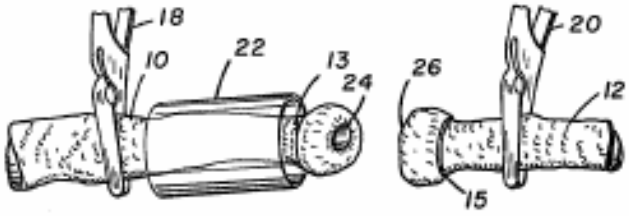

FIG. 1B

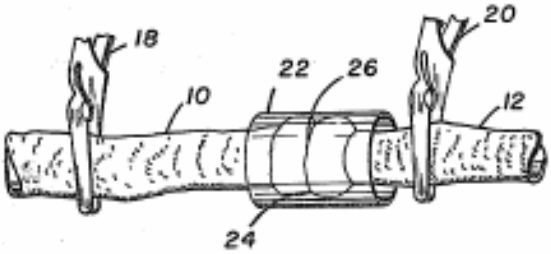

FIG. 1C

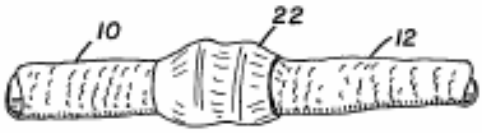

FIG. 1D

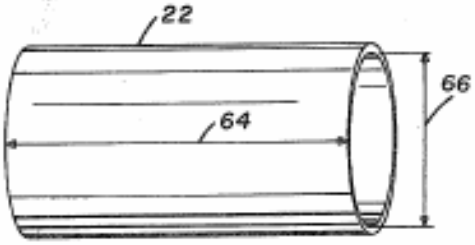

FIG. 3A

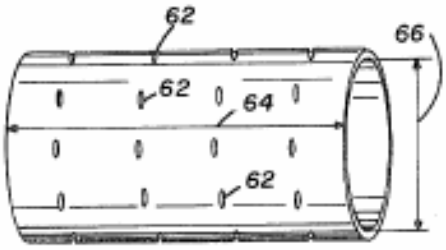

FIG. 3B

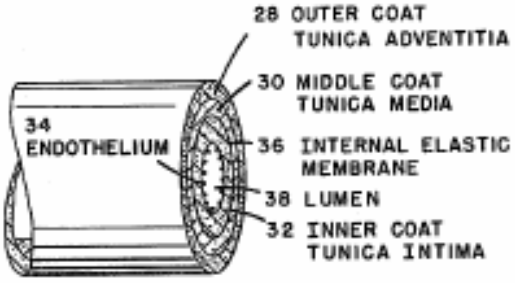

FIG. 2A

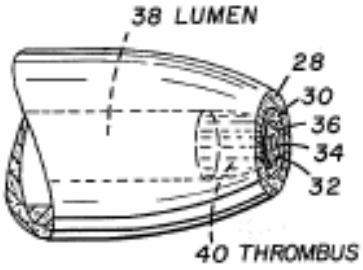

FIG. 2B

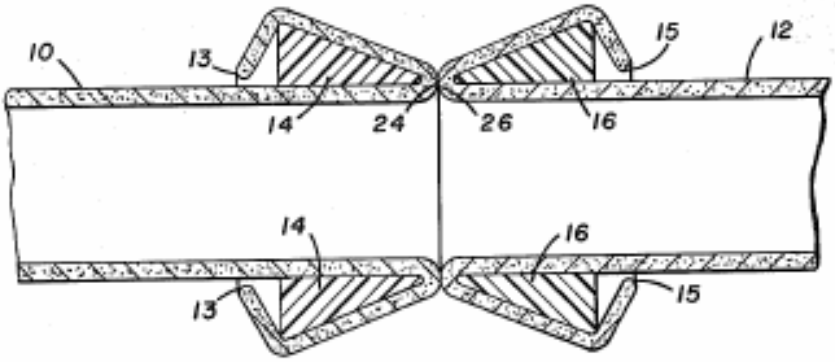

FIG. 2C

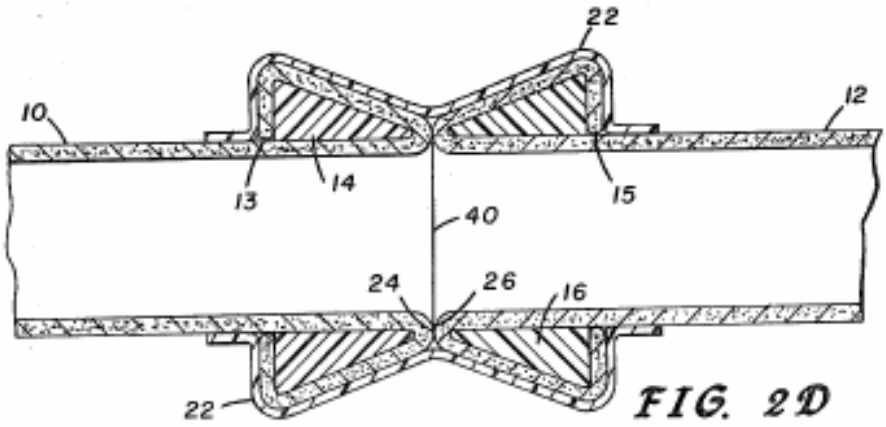

FIG. 2D

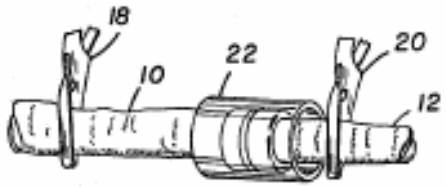

FIG. 4A

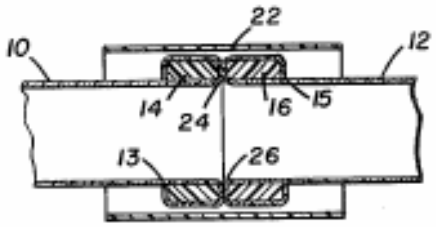

FIG. 5A

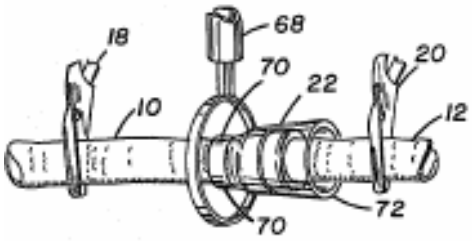

FIG. 4B

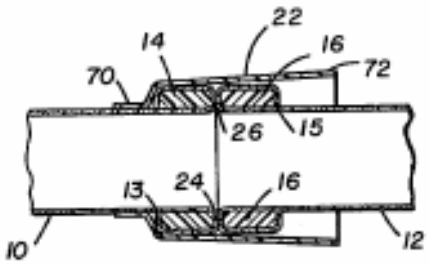

FIG. 5B

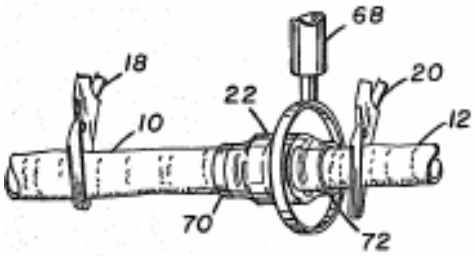

FIG. 4C

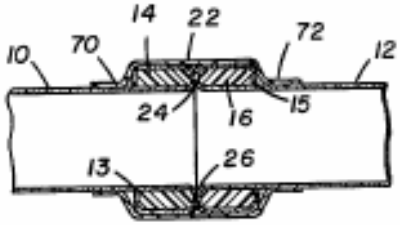

FIG. 5C

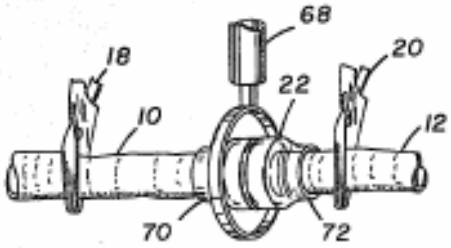

FIG. 4D

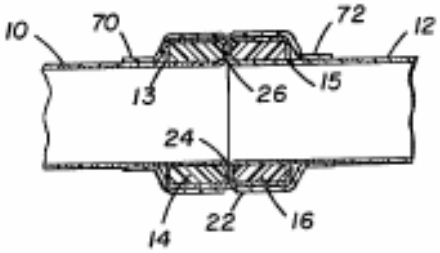

FIG. 5D

U.S. Patent Sep. 11, 1984 Sheet 4 of 6 4,470,415

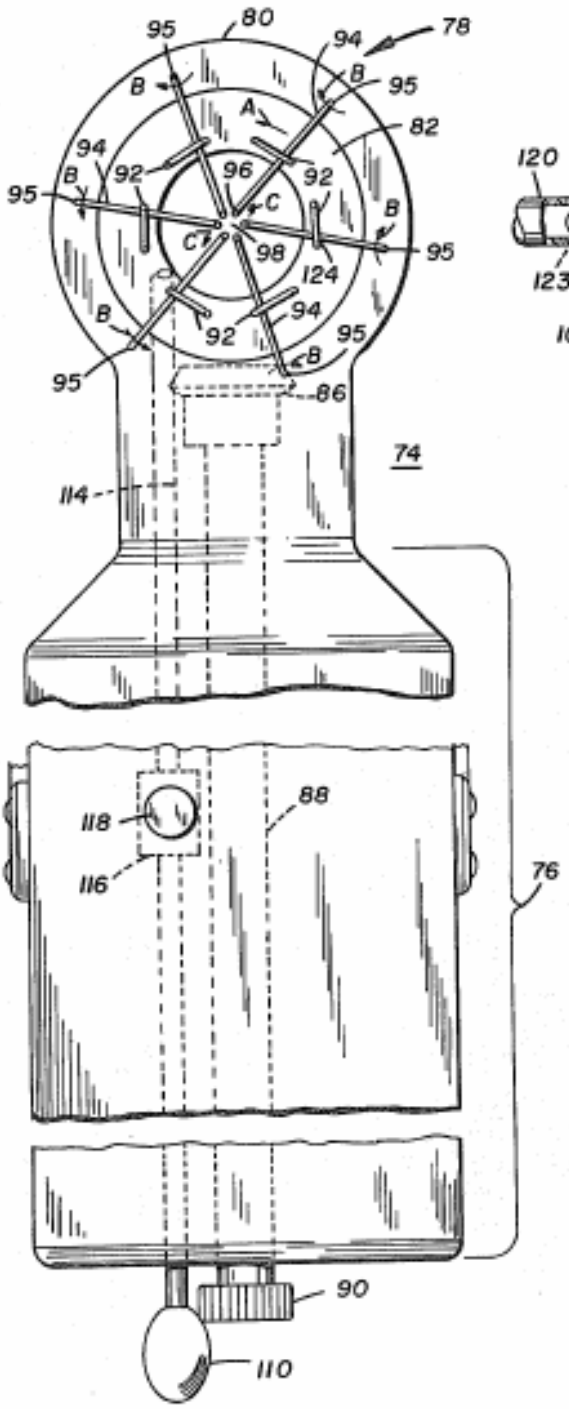

FIG. 6

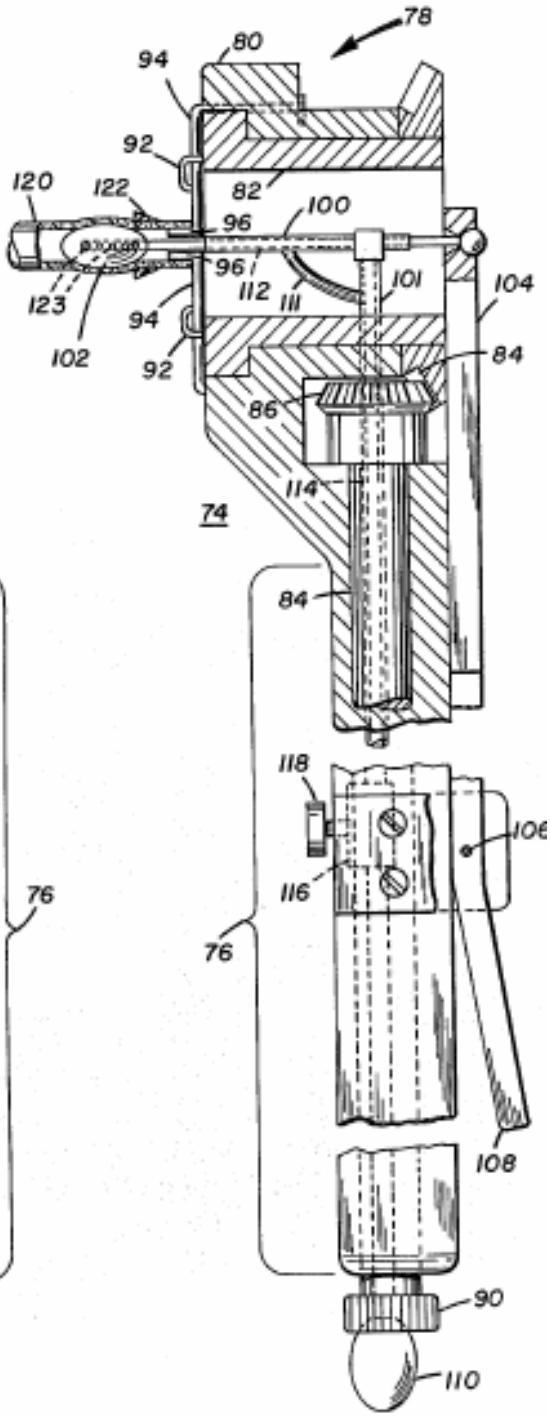

FIG. 7

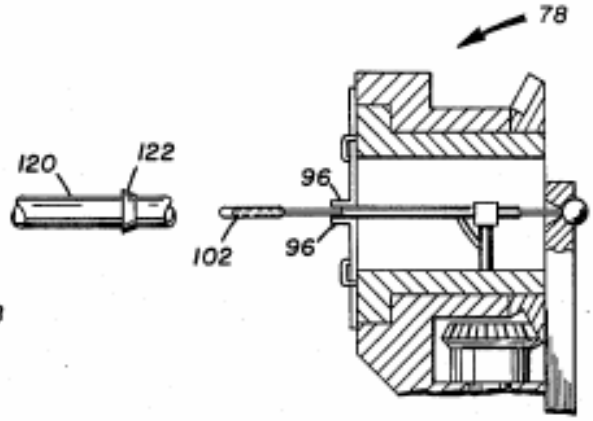

FIG. 8A

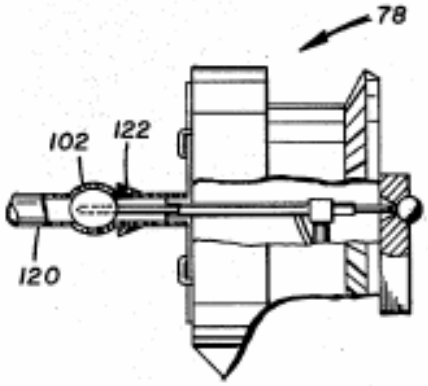

FIG. 8B

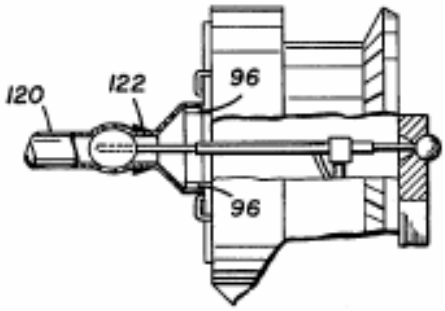

FIG. 8C

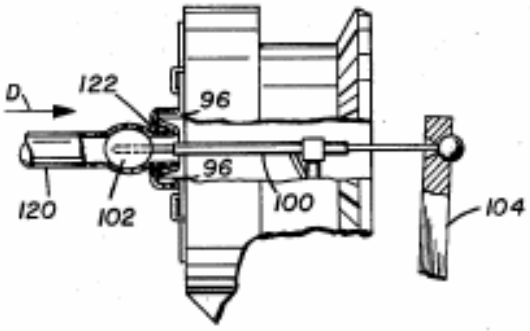

FIG. 8D

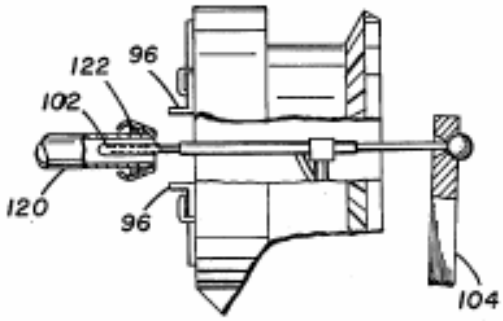

FIG. 8E

U.S. Patent Sep. 11, 1984 Sheet 6 of 6 4,470,415

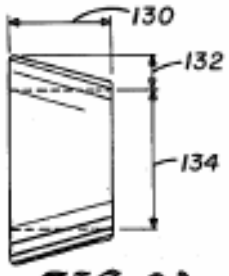

FIG. 9A

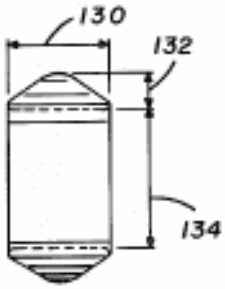

FIG. 9B

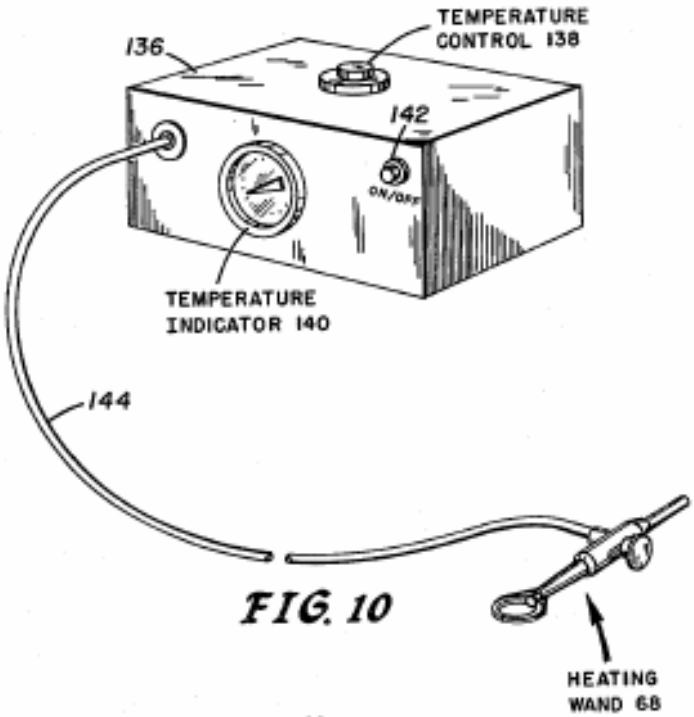

FIG. 10

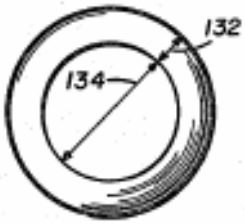

FIG. 9C

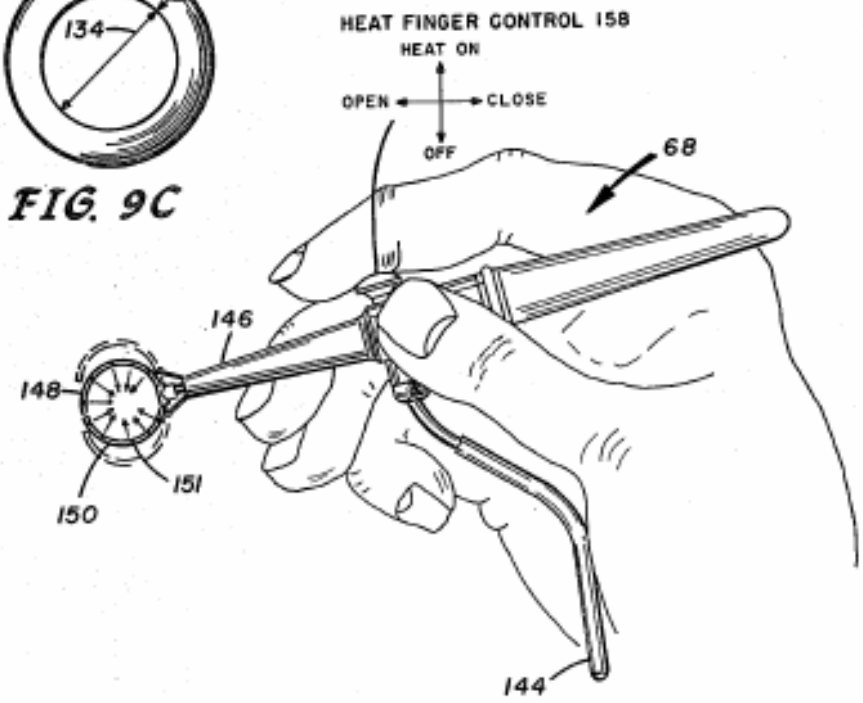

FIG. 11

SUTURELESS VASCULAR ANASTOMOSIS MEANS AND METHOD

STATEMENT OF GOVERNMENTAL INTEREST

The Government has rights in this invention pursuant to Contract No. N00024-81-C-5301 awarded by the Department of the Navy.

BACKGROUND OF THE INVENTION

This invention relates generally to a means and method for surgical anastomosis and more specifically to a means and method for performing sutureless surgical end-to-end anastomosis.

Severed blood vessels and other tubular fluid carrying body members requiring anastomosis are frequently encountered in penetrating wounds inflicted during combat, civil violence and automobile accidents. Other surgical procedures requiring anastomosis are the bypassing of blocked tubular members or replacement of a portion of a vessel or other tubular member with a portion of a vessel taken from another part of the body. Still another surgical procedure requiring anastomosis is the replacement of a damaged or diseased vessel or other tubular member with a prosthesis. At the present time, when these types of surgical procedures are necessary and when the requisite skills and facilities are available, the tubular members are anastomosed using a suturing procedure. As can be appreciated, the suturing of blood vessels or other tubular members requires exquisite skill and is a time consuming procedure. Under combat or emergency conditions, the requisite skills, facilities and time may not be available to prevent loss of limb or life.

The difficulties associated with anastomotic procedures are illustrated by examining the problems associated with vascular anastomosis. Arteries within man have three coats: the outer coat or tunica adventitia, consisting of a strong fibrous sheath; the middle coat or tunica media, consisting of muscular fibers; and the inner coat or tunica intima, consisting of a layer of elastic tissue lined with plate-like endothelial cells. When an artery is severed the muscular coat instantly contracts, drawing the cut end within the outer fibrous sheath so that a very small hole is left to be closed by blood clotting. Because of the constrictive response of the tunica media, a small artery usually can be severed without hemorrhaging. However, the same response may tend to inhibit reestablishment of patency if the vessel is rejoined.

The suturing process, in an anastomotic procedure, must be conducted by a surgeon specially trained in vascular surgery. Using a curved needle the sutures must be placed precisely, piercing the tunica adventitia from the outside and the tunica intima from the inside in the exact locations for proper vessel approximation (tunica intima aligned and in good contact). Either individual or a continuous running suture are used. The suturing procedure, as can be appreciated, is an extremely time consuming process. For small vascular members, the suturing procedure must be conducted under magnification by a surgeon trained in microvascular anastomosis. Typically, for an artery with a 3 mm lumen approximately 20 stitches must be taken around the circumference using a 6-0 (0.1 mm diameter) thread. It is usually not technically possible to perform a microvascular anastomosis in less than 30 minutes. Because of the time required for the anastomotic suturing

procedure, the greatest success rate is achieved when anastomosis is performed in areas having a good collateral blood supply or in an area which can tolerate the loss of blood flow for the time required for the anastomotic suturing procedure. Inordinate time and skill is required to insure that the tunica intima of the two vessels being anastomosed are joined in intimate contact to prevent vascular occlusion and to insure proper healing of the vessel. A vascular occlusion at the site of anastomosis can lead to disastrous results including loss of life or limb.

Another problem area which is illustrative of the problem associated with sutures in an anastomotic procedure is intracranial surgery and the difficulties presented by the application of sutures to anastomose intracranial vessels. Cerebral arteries as compared to extracerebral vessels have less tunica adventitia, reduced tunica media and have many perforating branches which preclude the surgeon from rotating the vessel during the anastomotic suturing procedure. The limited time that intracranial vessels can be occluded without brain damage hamper and sometimes preclude the successful application of sutures to cerebral vessels.

Still another problem area which is further illustrative of the problem associated with sutures is the procedure of grafting a prosthesis to an existing vessel. It has been found that the clinical success of prosthetic grafts is dependent, to a large extent, on the suturing procedure. In other words, the suturing procedure is a major cause of failure of prosthetic grafts. The sutures must be properly made to avoid interfaces which cause tubulent flow and clotting. If the sutures are too tight or too closely spaced they produce necrotic areas. If the sutures are too loose or too far apart leakage occurs and early failure occurs. Additionally, it has been found that a strong fibrous bond does not develop between the graft and the vessel so that the union is dependent on the strength of the anastomotic suture. Because of the inherently weak junction coupled with fraying of the prostheses caused to a large part by the sutures, false aneurysms have been the cause of complications. This problem is aggravated when the conditions of the vessel are such that its ability to maintain sutures is impaired by degenerative disease. As a result, a number of techniques have been investigated to reinforce the suture line such as suturing reinforcing sleeves over the vessel-to-prosthetic junction. Furthermore, prostheses, depending on the type of material and the type of weave or knit, vary in their ability to hold sutures.

The prior art discloses a number of attempts to develop a sutureless technique to perform anastomosis. One method has employed tissue adhesives. Animal research, however, has shown that adhesive techniques are not satisfactory and often result in necrosis of the tunica media at the site of the junction, thrombosis, if any adhesive enters the lumen, and a high incidence of early hemorrhaging, "Handbook of Biomedical Plastics", Lee, Henry and Neville, Kris, Pasadena Technology Press, pages 4–14.

Other attempts to develop a successful sutureless anastomotic technique are represented by U.S. Pat. Nos. 3,221,746, 3,357,432, 3,648,295, 3,683,926 and 4,267,842. However, all of these feature an inner tube-like device placed inside the vessels to be anastomosed. As is known in the art, a constriction, irregularity or foreign material within the lumen of a blood vessel

tends to cause a blood clot to form which may eventually occlude the vessel.

Still other attempts to develop a successful sutureless anastomotic technique are represented by U.S. Pat. Nos. 3,316,914, 3,774,615, 4,214,586 and 4,233,981. U.S. Pat. Nos. 3,316,914 and 4,233,981 both feature a pair of annular flanges. Pointed pins on one of the flanges are pierced through the vessel walls and are inserted into apertures in the other flange to hold and locate the vessel walls. The flanges in U.S. Pat. No. 4,233,981 are held in place by nuts and bolts. The flanges in U.S. Pat. No. 3,316,914 are held in place by sutures threaded through aligned holes on the flanges.

U.S. Pat. No. 3,774,615 discloses a device comprising a connecting ring over which the ends of the severed vessel are pulled and a fastening means to secure the severed vessel ends to the connecting ring. U.S. Pat. No. 4,214,586 discloses a three-piece coupling device comprising two open bore cylindrical adaptors and an open bore cylindrical connector. Each end of the vessel to be anastomosed are passed through the axial bore of an adaptor and everted over the end of the adaptor. The adaptors are then inserted into opposite ends of the connector until the everted ends of the vessel abut under light compression. Means integral to the adaptors and connector secure the device in place.

Other methods, including stapling, have been suggested to avoid the disadvantages of suturing. However, each of the proposed methods either have a complicated mechanical device that may be unadaptable in certain surgical situations, have a portion of the device within the vessel lumen or damage the vascular wall.

The ideal anastomotic technique should provide firm intimate contact between the inner coats of the members being anastomosed to prevent leakage while promoting healing, should not damage the vascular wall to prevent necrosis and a source of infection, should be completely external to the vascular lumen to prevent thrombi from forming, should provide fast and simple execution, should be able to be accomplished without rotation of the vessel or member being anastomosed, should require a lesser degree of skill than now required of vascular surgeons, on the part of the surgeon performing the anastomosis and should be able to be performed in a combat or emergency situation.

It is therefore one object of this invention to provide a sutureless anastomosis technique that is rapid, simple and that can be performed in a combat or emergency situation.

It is another object of this invention to provide a sutureless anastomosis technique that provides perfect adaptation of the members being anastomosed without damage to the walls of the members.

It is a further object of this invention to provide a sutureless anastomosis technique that is reliable and requires less skill on the part of a surgeon than anastomotic suturing and which can be performed in a combat or emergency situation.

It is still another object of this invention to provide a sutureless anastomosis technique that does not require the members being anastomosed to be rotated.

It is still a further object of this invention to provide a sutureless anastomosis technique that does not require any foreign object within the lumen of the members being anastomosed.

It is also another object of this invention to provide a sutureless anastomosis technique that is applicable to prosthetic grafts.

Other objects, advantages and novel features of the present invention will become apparent from the following detailed description of the invention when considered in conjunction with the accompanying drawings.

BRIEF DESCRIPTION OF THE DRAWINGS

The above and further objects and novel features of the invention will more fully appear from the following description when the same is read in connection with the accompanying drawings. It is to be understood, however, that the drawings are for the purpose of illustration only, and are not intended as a definition of the limits of the invention.

FIGS. **1A–1D** are sequential pictorials of the anastomosis technique taught by the present invention.

FIG. **2A** is a view of a vascular vessel with a cross sectional view showing its structure.

FIG. **2B** is a view of a portion of the vessel shown in FIG. **2A** showing its reaction to be severed.

FIG. **2C** is a cross sectional view of two portions of a severed vessel each of which have been everted over a ferrule and placed in an anastomotic relationship.

FIG. **2D** is a cross sectional view of the two portions shown in FIG. **2C** with the shrinkable sleeve shrunken as taught by the present invention.

FIGS. **3A** & **3B** are two embodiments of the shrinkable sleeve in an unshrunken state.

FIGS. **4A–4D** are sequential pictorials of the method of applying heat to the heat shrinkable sleeve in the anastomosis technique as taught by the present invention.

FIGS. **5A–5D** are sequential cross sectional views, corresponding to FIGS. **4A–4D** respectively, showing the relationship of the two portions being anastomosed, the ferrules placed on the two portions and the shrinkable sleeve.

FIG. **6** is a plan view of the everting tool employed in the anastomosis technique as taught by the present invention.

FIG. **7** is a side view of the everting tool shown in FIG. **6** with a portion of a tubular member in position for the initiation of the everting process as taught by the present invention.

FIGS. **8A–8E** are sequential pictorials of the method of everting each of the ends of the two members being anastomosed over the ferrule placed on each of the ends.

FIGS. **9A–9B** show two embodiments of the ferrules as taught by the present invention.

FIG. **9C** shows a plan view of a ferrule.

FIG. **10** is a pictorial of the heating means as taught by the present invention.

FIG. **11** is a pictorial of the heating means wand and its method of use.

DESCRIPTION OF THE PREFERRED EMBODIMENT

Referring now to the drawings wherein like numerals indicate like elements, FIGS. **1A–1D** are sequential pictorials of the anastomotic technique as taught by the present invention. FIG. **1A** shows a first member **10** and a second member **12** which are to be anastomosed. A first ferrule **14** is placed over end **13** of first member **10**. A second ferrule **16** is placed over end **15** of second member **16**. Clamps **18**, **20** are employed by a surgeon to stop the flow of fluid through members **10**, **12** and to hold members **10**, **12** in place during the anastomosis

procedure. The anastomosis technique taught by the present invention is intended to be employed for any tubular member or organ including, but not limited to, veins, arteries, oviducts, urethras, phrynxes, intestines, ductus deferens, nerves, fallopian tubes, etc. In addition, the anastomosis procedure taught by the present invention is intended to be employed when one of the members is a replacement vessel taken from another part of the body or is a prosthesis.

The ferrules **14, 16** are selected to have an inner diameter approximately the same as the outer diameter of the vessel being anastomosed. Whenever a blood vessel is being anastomosed it may be preferred to have ferrules **14, 16** slightly larger than the vessel being anastomosed to preclude the anastomosed vessel having a constriction therein which may cause a thrombus to form.

FIG. **1B** shows the ends of members **10, 12** everted over ferrules **14, 16** respectively and shrinkable sleeve **22** placed around member **10**. It is noted that shrinkable sleeve **22** may be initially placed around either of members **10, 12**. The eversion of ends **13, 15** of members **10, 12** respectively results in everted ends **24, 26** on members **10, 12** respectively. FIG. **1C** shows everted ends **24, 26** placed in an end-to-end anastomotic relationship and shrinkable sleeve **22** placed in a position ready to be shrunk. FIG. **1D** shows members **10, 12** anastomosed with shrinkable sleeve **22** shrunken.

FIG. **2A** shows a blood vessel with a cross sectional view showing the layers that make up a blood vessel. The blood vessel is made up of three coats: an outer coat **28** or tunica adventitia consisting of a strong fibrous sheath; the middle coat **30** or tunica media consisting of muscular fibers; and the inner coat **32** or tunica intima consisting of a layer of elastic tissue lined with plate-like endothelial cells **34**. Between the middle coat **30** and the inner coat **32** there is an internal elastic membrane **36**. The hollow interior wherein the blood flows is termed the lumen **38**. As is known in the surgical art, to insure a successful anastomosis of a vascular vessel it is imperative that the inner coats **32** of the two members be brought into contact to promote healing and to have a continuous layer of endothelial cells **34**. This lessens the possibility of the formation of thrombi and the resulting occlusion of the anastomosed vessel which, as can be appreciated, could result in death or loss of limb to the patient. Another potential problem area is necrosis which can be caused by a portion of the vessel being anastomosed being pinched or being depleted from a blood supply. The necrotic area that results is a potential source of infection or a potential weak area that could cause the anastomosed vessel to fail, again with possible disastrous results. It is here emphasized that although the procedures described herein are described in relation to blood vessels the same techniques can be employed to the joining of any two tubular members with slight modifications to the procedure taught by the present invention which would be obvious to one of ordinary skill in the art.

Returning now to the drawings, FIG. **2B** is a pictorial representation of the reaction that occurs when a blood vessel is severed. Upon severence middle layer **30** immediately constricts causing the lumen **38** at the point of severence to become as small as possible to prevent a large loss of blood by allowing a blood clot or thrombus **40** to be more easily formed. During an anastomotic procedure it is necessary to remove the thrombi formed in the two members being anastomosed. The methods of removing thrombi are well known in the surgical art. FIG. **2C** is a cross sectional view of two members **10, 12** with end **13** of member **10** everted over ferrule **14** and end **15** of member **12** everted over ferrule **16**. The resulting everted ends **24, 26** are shown placed in an end-to-end anastomotic relationship. As can be appreciated, the technique as taught by the present invention results in the inner layers placed in a firm, intimate anastomotic relationship as required for successful anastomosis. As also can be appreciated, the selection of proper size ferrules **14, 16** ensures that the resulting anastomotic region is not constricted. As is well known a constriction (reduced diameter) in an anastomosed blood vessel has a tendency to encourage formation of thrombi. Additionally, because the technique as taught by the present invention is sutureless there is no possibility that a misplaced suture penetrating the lumen can cause formation of thrombi. FIG. **2D** is a cross sectional view of the two members **10, 12** shown in FIG. **2B** with shrinkable sleeve **22** shrunken over the anastomosis region. The shrunken shrinkable sleeve firmly holds ends **13, 15** against ferrules **14, 16** respectively. As will be explained in more detail below shrinkable sleeve **22** can be selected to shrink in the radial direction and in the longitudinal direction. As can be appreciated from FIG. **2D** the radial direction shrinkage causes the shrinkable sleeve **22** to firmly hold the portions of members **10, 12** between ends **13, 15** and everted ends **24, 26** against ferrules **14, 16** respectively. The longitudinal shrinkage causes firm intimate contact between everted ends **24, 26** and thereby junction **40** between members **10, 12** will not allow leakage of fluid from the vessels.

FIG. **3A** is an illustration of the shrinkable sleeve in its unshrunken state. The sleeve may be manufactured in various diameters and in a continuous roll. The surgeon then selects the sleeve with a diameter larger than the members to be anastomosed and large enough to easily fit over the ends everted over the ferrules. The surgeon then cuts the sleeve to the correct length. The correct length is selected so that each end of the shrinkable sleeve extends approximately 15% of its length beyond each everted end and the underlying ferrule. This allows a longitudinal shrinkage of approximately 15% so that the shrinkable sleeve extends slightly beyond each everted end and the underlying ferrule after being shrunk. FIG. **3B** illustrates another embodiment of a shrinkable sleeve. In this embodiment the sleeve is manufactured with small holes **62** through the walls of the sleeve **22** to allow body fluids to reach the members underlying the sleeve **22**. It may be advantageous and desirable in some applications to have a perforated or cribreformed sleeve. Referring to both FIGS. **3A** and **3B** the length **64** is selectable by the surgeon as discussed above and the sleeves are manufactured with various diameters represented at **66**.

Heat shrinkable tubing is currently being used in the electronics industry to protect and encapsulate electronics connectors and components. Silicone rubber, Teflon, polyvinyl chloride (PVC), polyethylene and neoprene are materials currently being used. The degree of shrinkage is established during the manufacturing process. Radial shrink ratios, for these materials, range from 2:1 to 10:1 and the longitudinal shrinkages range from 5 to 15 percent. However none of the commercially available heat shrinkable materials possess all of the properties required for anastomosis procedure as taught by the present invention. For example, neoprene can undergo shrinking at a low temperature (approximately 140° F.) but it is not biocompatible; Teflon is

implantable, but high temperatures are needed to cause shrinking.

A successful heat shrinkable polymer for the anastomosis procedure as taught by the present invention must have good in vivo stability; possess a low crystalline melt point [approximately 50° C. (122° F.) to 70° C.(158°)] to minimize damage to biological tissue during the application of heat; form crosslinks rather than degrade when irradiated; and have at least a moderate tensile strength. Additional desired qualities, but not critical qualities are that the sleeve remain somewhat flexible in vivo and be clear or transparent to allow the surgeon to verify installation during and after the installation.

The development of a heat shrinkable material is accomplished by causing certain polymers to form crosslinks between the long molecular chains in the polymer. Causing a polymer to form crosslinks can be done by a chemical reagent or by irradiation. However, some of the reagents used in the chemical process leave toxic residues. The preferred method of forming a biocompatible heat shrinkable polymer is by irradiation.

The method of producing a heat shrinkable tubing by irradiation is well known in the art. The radiation processing generally used is limited to two types of ionizing radiation: cobalt-60 gammas (approximately 1.25 MeV) and electrons with energies in the range 0.2–10 MeV. The production of a heat shrinkable polymer is accomplished by irradiating a suitable polymer with a dose of radiation between 5–20 Mrad to produce crosslinks in the polymer, heating the polymer to the crystalline melting temperature, stretching and then quickly cooling the polymer in the stretched configuration. The polymer remains in the stretched configuration until heated to at or above the melting point of the crystalline structure at which time the crosslinks cause a rubber like contraction to the original form.

The crosslinks in a heat shrinkable polymer are not affected by the application of heat whereas the crystal structure will melt if raised to the proper temperature. The tension in the crosslinks is sufficient to cause the polymer to shrink. The final diameter of the sleeve and the level of compression produced by the sleeve are selected so that the installed sleeve will not be too tightly drawn causing necrotic areas or too loose permitting escessive bleeding and union failure.

Specific polymers that have the requisite properties for a biocompatible shrinkable sleeve may be found in the following generic classes of polymers; polyethylenes, polypropylenes, polyesters and polyoxides. The best mode known at the present time is either polyethylene oxide or polyethylene adipate. Other materials from the generic classes listed above may or may not be better suited for the heat shrinkable sleeve as taught by the present invention. As can be appreciated, the selection of materials to be used in the human body must be done with especial care and caution and is a long term process.

Returning now to the figures and specifically to FIGS. **1A–1D** which were discussed above with specific reference to a vascular application. The present invention comprehends the application to an anastomotic procedure wherein one of the members being anastomosed is a prosthesis. For example, second member **12** in FIGS. **1A–1D** or second member **12** in FIGS. **2C** and **2D** may be a prosthesis. As is well known in the art the clinical success or prosthetic grafts as they are presently performed are largely dependent on the methods of suturing. In other words major problems are caused by the suturing process. If sutures are improperly made interfaces result which causes turbulent flow and clotting. If the sutures are too tight nectoric areas result. If the sutures are too loose the interface leaks or may be a cause of early failure. Experience has shown that with prosthetic grafts in humans, a strong fibrous bond does not characteristically develop between the graft and the vessel, and the union is dependent upon the strength of the anastomotic suture. The prostheses, depending upon the type of material, vary in the ability to hold sutures. The present invention provides a method wherein no sutures have to be taken either in the existing vessel or the prosthesis.

Referring to FIGS. **4A–4D** and FIGS. **5A–5D** the methods of applying heat to the heat shrinkable sleeve will now be explained. FIGS. **5A–5D** are sequential cross sectional views of the junction shown in FIGS. **4A–4D** respectively. FIG. **4A** shows first member **10** and second member **12** placed in an end-to-end anastomotic relationship with heat shrinkable sleeve **22** positioned ready to be shrunk. FIG. **5A** is a cross sectional view of the junction shown in FIG. **4A**. FIG. **4B** shows a heating wand **68** disposed around a first end **70** of shrinkable sleeve **22**. The details of heating wand **68** will be discussed below. End **70** shrinks principally in a radial direction and holds end **13** of first member **10** firmly around ferrule **14** as shown in FIG. **5B**. FIG. **5C** shows heating wand **68** disposed around a second end **72** of shrinkable sleeve **22**. End **72** shrinks principally in a radial direction and holds end **15** of second member **12** firmly around ferrule **16** as shown in FIG. **5C**. FIG. **4D** shows heating wand **68** disposed around the center of sleeve **22**. The center of sleeve shrinks in a radial direction around ferrules **14** and **16** and forms a tight bond around the anastomosis junction. In addition, sleeve **22** shrinks in a longitudinal direction causing ends **70, 72** of sleeve **22** to be drawn towards the center of the anastomotic junction causing everted ends **24, 26** to form a tight leakproof bond, shown in FIG. **5D**.

Referring now to FIGS. **7, 8** an embodiment of an everting tool will now be discussed. The sutureless anastomotic procedure taught by the present invention requires an efficient method of everting the ends of the tubular members being anastomosed over the ferrules placed on the ends. The everting means must have a method for holding the ferrule stationary while the end of the member being anastomosed is everted over the ferrule. Additionally, the everting means must have a method of expanding the end and folding the end over the ferrule. FIGS. **6, 7** illustrate an embodiment of an everting tool **74** and comprises generally a handle portion **76** and a head portion **78**. Head portion **78** further comprises a stationary section **80** attached to handle **76**. A rotatable section **82** is disposed within stationary section **80** and has a gear face **84** (FIG. **7**) disposed thereon. Gear face **84** meshes with gear **86** which is attached to rotatable shaft **88** which extends through handle **76** and is attached to knob **90**. Rotatable section **82** has six staple shaped members **92** disposed thereon. Staple members **92** extend above the surface of rotatable section **82**. Six rotatable levers **94** are rotatably attached to stationary section **80** at pivot points **95** and extend through the space between staple members **92** and rotatable section **82**. Rotatable levers **94** are disposed towards the center of head portion **78** and terminate with outwardly pointing prongs **96**. The prongs **96** when in a closed position, as shown in FIGS. **6, 7** define

a circular space **98** therebetween. The everting tool further comprises a slidable shaft **100** with an inflatable balloon **102** (shown inflated in FIG. 7) attached to one end thereof. Inflatable balloon **102** and a portion of slidable shaft **100** extend through circular space **98** defined by prongs **96**. Slidable shaft **100** is held in place by support member **101** and is slidable therethrough. The other end of slidable shaft **100** is pivotably attached to lever **104**. Lever **104** extends along handle **76**, is pivoted at pivot **106** and bends outwardly from handle **76** and comprises a lever handle **108**. Inflatable balloon **102** communicates with a fluid supply comprising a pressurization bulb **110** via passageway **112** within slidable shaft **100**, flexible tube **111** and passageway **114** within support member **101** and handle **76**. Passageway **114** passes through a controllable check valve **116** controlled by knob **118**. Check valve **116** can be opened to allow fluid in inflatable balloon **102** to be bled off.

The operation of everting tool **74** will now be explained referring to FIGS. **6** and **7**. Inflatable balloon **102** and a portion of slidable shaft **100** are inserted by the surgeon into the lumen of a vessel **120** or other member to be anastomosed. A ferrule **122** has been previously disposed on vessel **120**. At the same time prongs **96** are inserted into vessel **120** until the end of vessel **120** is flush against rotatable levers **94**. The surgeon inflates inflatable balloon **102** by squeezing pressurization bulb **110** which forces fluid through passageway **114** and check valve **116**, through passageway **112**, flexible tube **111** and into inflatable balloon **102** via holes **123** in slidable shaft **100**. Inflatable balloon **102** is inflated until the walls of vessel **120** are pushed outwardly a sufficient distance to prevent ferrule **122** from sliding along vessel **120**. The amount of vessel wall extension caused by inflation of balloon **102** is monitored visually by the surgeon. During this step of the procedure, knob **118** is in a closed position, i.e., to prevent fluid from bleeding out of balloon **102**. The surgeon then rotates knob **90** causing shaft **88** to rotate, causing gear **86** to rotate, causing gear face **84** to rotate and thus rotatable section **82** is caused to rotate. Referring to FIG. **6**, if rotatable section **82** is caused to rotate in the direction of arrow A, rotatable levers **94** will pivot around pivot points **95** in the direction of arrow B. This motion is caused by staple **92** rotating with rotatable section **82** and bearing against rotatable levers **94** at a point indicated by **124** of staples **92**. The rotation of levers **94** causes prongs **96** to move in the direction of arrow C. The reaction of all the prongs define an iris-diaphragm effect causing the end of vessel **120** to expand radially. The remaining steps of the procedure will be explained by referring to FIGS. **9A–9E** which are sequential pictorials illustrating the complete eversion procedure.

FIG. **8A** shows vessel **120** with ferrule **122** disposed thereon and everting tool head **78** with inflatable balloon **102** deflated and prongs **96** in a closed position. FIG. **8B** is a view of the balloon **102** inserted and inflated in vessel **120**. FIG. **8C** shows prongs **96** in the open position and the end of vessel **120** being radially expanded. Note that the expansion of the walls of vessel **120** by balloon **102** prevents ferrule **122** from sliding out of position. It is noted that the amount of radial expansion of prongs **96** is controllable by the surgeon by controlling the degree of rotation of knob **90** (FIGS. **6**, **7**) and is dependent upon the original size of the vessel being anastomosed. FIG. **8D** is a view of the ends of vessel **120** beginning to be folded over ferrule **122**. The folding over is caused by the surgeon causing lever **102** to move outward which causes slidable shaft **100**, balloon **102** and the vessel **120** to be drawn towards the everting tool in the direction of arrow D. This causes prongs **96** to fold the end of vessel **120** over the outer periphery of ferrule **122**. Lever **104** is caused to move outward by the surgeon depressing lever handle **108** (FIG. 7). FIG. **8E** shows the eversion procedure completed, i.e., the end of vessel **120** completely folded over ferrule **122** and the balloon **102** ready to be withdrawn from the vessel **120**. This is accomplished by the surgeon further depressing lever handle **108** (FIG. 7) causing lever **104** to move further outward causing slidable shaft **100** and the deflated balloon **102** to be withdrawn from the vessel. It is to be appreciated that prongs **96** press against vessel **120** over ferrule **122** allowing the deflated balloon to be withdrawn. Also, it is to be appreciated that the balloon is caused to be deflated by the surgeon opening knob **118** (FIG. 7) which opens check valve **116** (FIG. 7) allowing fluid to bleed out of balloon **102** via passageway **112** in slidable shaft **100** and passageway **114** in support **101** and handle **76**.

Referring now to FIGS. **9A–9B** there are shown in cross section two embodiments of ferrules suitable for the procedure as taught by the present invention. FIG. **9C** is a plan view of a ferrule. The preferred embodiment is a ferrule which is rigid or semi-rigid to provide support for the vessel and to prevent the vessel from collapsing when the shrinkable tubing is shrunk. The ferrules serve to open, and maintain open, the occluded ends of the vessel. Because the ferrules do not contact the blood within the vessel the problem of the formation of thrombi is avoided and the material selection is based upon the following factors: the ferrules should not induce an inflammatory reaction, should be non-toxic and should be dimensionally stable. If the application in which the ferrules are to be used provides natural healing such that sufficient vessel strength is developed then in vivo degradable materials such as collagen (treated natural tissue) or polyglycolate may be used. If long-term, stable ferrules are desired then a polypropylene or polyethylene material is desirable. The preferred shape is shown in FIG. **9B** wherein the external diameter is greatest in the center and tapers towards the ends of the ferrule. This shape eases vessel eversion and helps to keep the vessel wall in place after the sleeve is installed and shrunk. It is anticipated that the ferrules will be manufactured in several sizes, however, nominal dimensions are as follows: the dimension indicated at **130** is approximately 0.10 inches, the dimension indicated at **132** is approximately 0.03 inches and the dimension indicated at **134** is between approximately 0.12 inches and 0.22 inches.

Referring now to FIG. **10** there is shown a pictorial representation of the heating means for applying heat to the heat shrinkable sleeve. The heating control indicated generally at **136** comprises a source of heat which may be an electrical coil and fan (not shown) a temperature selector control **138**, a temperature indicator **140**, an on/off control **142** and a communication means **144** which may be a tubular member to transport hot air to a heating wand **68**. Referring now to FIG. **11** the heating wand **68** is shown in more detail. The preferred embodiment comprises a handle **146**, an upper jaw **148** and a lower jaw **150** which are closable to encircle the vessel being anastomosed, and a dual finger control **152** to allow the surgeon to control whether the heat is on or off and to control the opening and closing of jaws

148 and 150. Heat is supplied to the sleeve by hot air flowing from heating means 136 via tube 144 through handle 146 to jaws 148, 150 and then through outlets 151 disposed radially around jaws 148, 150. The flow of air is depicted by the arrows in FIG. 11. The operation is as follows: the wand with jaws 148, 150 in the open position, indicated by dashed lines in FIG. 12, is placed around the portion of the sleeve to be shrunk, the jaws 148, 150 are closed by the surgeon with dual control 152 and hot air is caused by the surgeon operating dual control 152 to be directed onto the sleeve to be shrunk.

While the invention has been described with reference to the accompanying drawings, it is to be clearly understood that the invention is not to be limited to the particular details shown therein, as various modifications, adaptations and alterations are within the scope of the following claims.

What I claim is:

1. A means for performing sutureless surgical anastomosis between a first tubular member and a second tubular member, comprising:

a first ferrule placed around an end of said first member;

a second ferrule placed around an end of said second member;

means for everting said ends of said first and second members over said first and second ferrules, respectively;

a shrinkable sleeve placed around said first and second members;

means for shrinking said shrinkable sleeve wherein said first and second ferrules and said shrinkable sleeve cooperate to hold said first and second members in an anastomotic relationship.

2. A means, as recited in claim 1, wherein said first member comprises a first portion of a severed vessel and said second member comprises a second portion of said severed vessel.

3. A means, as recited in claim 1, wherein said first member comprises a severed vessel and said second member comprises a replacement vessel removed from the same or another part of a body.

4. A means, as recited in claim 1, wherein said first member comprises a severed vessel and said second member comprises a prosthesis.

5. A means as recited in claim 2, 3 or 4 wherein said means for everting comprises:

means for expanding each of said ends of said first and second members; and

means for folding said expanded ends of said first and second members over said first and second ferrules, respectively, whereby said folded ends extend beyond each of said ferrules, respectively.

6. A means, as recited in claim 5, wherein said means for everting further comprises means for maintaining said first and second members stationary relative to said first and second ferrules, respectively.

7. A means, as recited in claim 6, wherein said means for maintaining said first and second members stationary comprises:

an inflatable balloon;

means for alternately inserting said inflatable balloon into said end of said first and second member;

means for inflating said inflatable balloon whereby said first and second member is expanded by said inflated balloon and is held securely against said first and second ferrule, respectively;

means for deflating said balloon; and

means for withdrawing said balloon.

8. A means, as recited in claim 7, wherein said shrinkable sleeve comprises a heat shrinkable sleeve and further comprising means for applying heat to aid heat shrinkable sleeve.

9. A means, as recited in claim 8, wherein said heat shrinkable sleeve is fabricated with a selectable radial dimension in an unshrunken state selected to be larger than said members to be anastomosed and with a selectable longitudinal dimension selected to extend beyond said first and second ferrules when in a shrunken state.

10. A means, as recited in claim 9, wherein said heat shrinkable sleeve is selectively shrinkable in a radial direction.

11. A means, as recited in claim 10, wherein said heat shrinkable sleeve is selectively shrinkable in a longitudinal direction.

12. A means, as recited in claim 11, wherein said means for applying heat comprises means for subjecting said heat shrinkable sleeve to a selectable temperature change, said temperature change being from a first temperature to a second temperature wherein said second temperature is greater than said first temperature.

13. A means, as recited in claim 12, wherein said heat shrinkable sleeve is fabricated from a biocompatible material which shrinks upon an application of heat at said second temperature selected to minimize damage to biological tissue.

14. A means, as recited in claim 13, wherein said second temperature is selected to be in the range of 50° C. to 70° C.

15. A means, as recited in claim 14, wherein said heat shrinkable sleeve is fabricated from a heat shrinkable polymer.

16. A means, as recited in claim 15, wherein said heat shrinkable sleeve is fabricated from a material selected from a group comprised of polyethylene, polypropylene, polyester and polyoxide.

17. A means, as recited in claim 15, wherein said heat shrinkable sleeve is fabricated with a smooth continuous wall.

18. A means, as recited in claim 15, wherein said heat shrinkable sleeve is fabricated with a cribreformed wall.

19. A means, as recited in claim 15, wherein said ferrules are fabricated from a biostable rigid material.

20. A means, as recited in claim 19, wherein said ferrules are fabricated from a material selected from a group comprising polypropylene and polyethylene.

21. A means, as recited in claim 15, wherein said ferrules are fabricated from an in vivo degradable material.

22. A means, as recited in claim 21, wherein said ferrules are fabricated from a material selected from a group comprising collagen and polyglycolate.

23. A method for performing sutureless surgical anastomosis between a first tubular member and a second tubular member comprising the steps of:

placing a first ferrule around an end of said first member;

placing a second ferrule around an end of said second member;

everting said end of said first member over said first ferrule;

everting said end of said second member over said second ferrule;

placing a shrinkable sleeve around said first and second members to be anastomosed;

placing said everted ends of said first and second members in an anastomotic relationship; and

shrinking said shrinkable sleeve around said first and second members whereby the shrunken shrinkable sleeve securely engages and maintains said first and second members in said anastomotic relationship.

24. A method, as recited in claim **23**, wherein said first member comprises a severed vessel and wherein said second member comprises a replacement vessel comprising a portion of a vessel removed from the same or another part of a body.

25. A method, as recited in claim **23**, wherein said first member comprises a severed vessel and wherein said second member comprises a prosthesis.

26. A method, as recited in claim **23** wherein:

said first and second members comprise a severed biological tubular member comprising a connecting tissue sheath enclosing further biological members;

said step of preparing said first and second members for anastomosis is accomplished by placing said further biological members in said anastomotic relationship; and

said shrunken shrinkable sleeve securely engages and maintains said connecting tissue sheath in said anastomotic relationship.

27. A method, as recited in claim **26**, further comprising the step of removing thrombi and other foreign material from said ends.

28. A method, as recited in claim **27**, wherein the steps of everting include the steps of:

expanding said end of said first member;

folding said expanded end of said first member over said first ferrule whereby said everted end extends beyond said first ferrule;

expanding said end of said second member; and

folding said expanded end of said second member over said second ferrule whereby said everted end extends beyond said second ferrule.

29. A method, as recited in claim **28**, wherein said steps of everting further includes the step of maintaining said first and second members stationary relative to said first and second ferrules respectively during said steps of enlarging said ends and folding said enlarged ends.

30. A method, as recited in claim **29**, wherein said step of maintaining said first and second members stationary includes the steps of:

inserting an inflatable balloon into said end of said first member;

inflating said balloon whereby said first member is held securely against said first ferrule during said step of everting said first member;

deflating and withdrawing said balloon from said first member;

inserting said inflatable balloon into said end of said second member;

inflating said balloon whereby said second member is held securely against said second ferrule during said step of everting said second member; and

deflating and withdrawing said balloon from said second member.

31. A method, as recited in claim **24** further comprising the step of removing thrombi and other foreign material from said ends of said severed vessel and said replacement vessel.

32. A method, as recited in claim **31**, wherein the steps of everting include the steps of:

expanding said end of said severed vessel;

folding said expanded end of said severed vessel over said first ferrule whereby said everted ends extends beyond said first ferrule;

expanding said end of said replacement vessel; and

folding said expanded end of said replacement vessel over said second ferrule whereby said everted end extends beyond said second ferrule.

33. A method, as recited in claim **32**, wherein said steps of everting further includes the step of maintaining said severed vessel and said replacement vessel stationary relative to said first and second ferrules respectively during said steps of enlarging said ends and folding said enlarged ends.

34. A method, as recited in claim **33**, wherein said step of maintaining said severed vessel and replacement vessel stationary includes the steps of:

inserting an inflatable balloon into said end of said severed vessel;

inflating said balloon whereby said severed vessel is held securely against said first ferrule during said step of everting said severed vessel;

deflating and withdrawing said balloon from said severed vessel;

inserting said inflatable balloon into said end of said replacement vessel;

inflating said balloon whereby said replacement vessel is held securely against said second ferrule during said step of everting said replacement vessel; and

deflating and withdrawing said balloon from said replacement vessel.

35. A method, as recited in claim **25**, further comprising the step of removing thrombi and other foreign material from said end of said severed vessel.

36. A method, as recited in claim **35**, wherein the steps of everting include the steps of:

expanding said end of said severed vessel;

folding said expanded end of said severed vessel over said first ferrule whereby said everted and extends beyond said first ferrule;

expanding said end of said prosthesis;

folding said expanded end of said prosthesis over said second ferrule whereby said everted end extends beyond said second ferrule.

37. A method, as recited in claim **36**, wherein said steps of everting further includes the step of maintaining said severed vessel and said prosthesis stationary relative to said first and second ferrules respectively during said steps of enlarging said ends and folding said enlarged ends.

38. A method, as recited in claim **37**, wherein said step of maintaining said severed vessel and said prosthesis stationary includes the steps of:

inserting an inflatable balloon into said end of said severed vessel;

inflating said balloon whereby said severed vessel is held securely against said first ferrule during said step of everting said severed vessel;

deflating and withdrawing said balloon from said severed vessel;

inserting said inflatable balloon into said end of said prosthesis;

inflating said balloon whereby said prosthesis is held securely against said second ferrule during said step of everting said prosthesis; and

deflating and withdrawing said balloon from said prosthesis.

39. A method, as recited in claim 23 wherein said shrinkable sleeve comprises a heat shrinkable sleeve and whe.ein said step of shrinking is accomplished by a step of applying heat to said heat shrinkable sleeve.

40. A method, as recited in claim 39, wherein said shrinkable sleeve comprises a heat shrinkable sleeve with a selectable radial dimension in an unshrunken state selected to be larger than said members to be anastomosed and with a selectable longitudinal dimension selected to extend beyond said first ferrule and said second ferrule when in a shrunken state.

41. A method, as recited in claim 40, wherein said heat shrinkable sleeve is selectively shrinkable in a radial direction.

42. A method, as recited in claim 41, wherein said heat shrinkable sleeve is selectively shrinkable in a longitudinal direction.

43. A method, as recited in claim 42, wherein the step of applying heat to said heat shrinkable sleeve includes the steps of:

applying heat to a first end of said heat shrinkable sleeve whereby said first end of said heat shrinkable sleeve shrinks in a radial direction and securely holds said folded end of said first member around said first ferrule;

applying heat to a second end of said heat shrinkable sleeve whereby said second end of said heat shrinkable sleeve shrinks in a radial direction and securely holds said folded end of said second member around said second ferrule; and

applying heat to a portion of said heat shrinkable tubing between said first end and said second end whereby said heat shrinkable sleeve shrinks in a radial direction and a longitudinal direction whereby said everted ends of said first and second members are brought into and maintained in a tight anastomotic relationship.

44. A method, as recited in claim 43, wherein the steps of applying heat are accomplished by subjecting said heat shrinkable sleeve to a selectable temperature change, said temperature change being from a first temperature to a second temperature wherein said second temperature is greater than said first temperature.

45. A method, as recited in claim 44, wherein said heat shrinkable sleeve is fabricated from a biocompatible material which shrinks upon an application of heat at said second temperature selected to minimize damage to biological tissue.

46. A method, as recited in claim 45, wherein said second temperature is selected to be in the range of 50° C. to 70° C.

47. A method, as recited in claim 46, wherein said heat shrinkable sleeve is fabricated from a heat shrinkable polymer.

48. A method, as recited in claim 47, wherein said heat shrinkable sleeve is fabricated from a material selected from a group comprised of polyethylene, polypropylene, polyester and polyoxide.

49. A method, as recited in claim 47, wherein said heat shrinkable sleeve is fabricated with a smooth continuous wall.

50. A method, as recited in claim 47, wherein said heat shrinkable sleeve is fabricated with a cribreformed wall.

51. A method, as recited in claim 47, wherein said ferrules are fabricated from a biostable rigid material.

52. A method, as recited in claim 51, wherein said ferrules are fabricated from a material selected from a group comprising polypropylene and polyethylene.

53. A method, as recited in claim 47, wherein said ferrules are fabricated from an in vivo degradable material.

54. A method, as recited in claim 53, wherein said ferrules are fabricated from a material selected from a group comprising collagen and polyglycolate.

* * * * *

A.4 US Patent 5,344,059: Surgical aparatus and anvil delivery system therefor, Green et al.; any 1994.

US005344059A

United States Patent [19]

Green et al.

[11] Patent Number: 5,344,059

[45] Date of Patent: Sep. 6, 1994

[54] **SURGICAL APPARATUS AND ANVIL DELIVERY SYSTEM THEREFOR**

[75] Inventors: **David T. Green**, Westport; **Henry Bolanos**, East Norwalk; **Henry R. Sienkiewicz**, Stamford, all of Conn.; **Patrick Leahy**, Dublin, Ireland

[73] Assignee: **United States Surgical Corporation**, Norwalk, Conn.

[21] Appl. No.: **950,435**

[22] Filed: **Sep. 23, 1992**

Related U.S. Application Data

[63] Continuation-in-part of Ser. No. 886,040, May 19, 1992.

[51] **Int. Cl.**[5] **A61B 17/115**

[52] **U.S. Cl.** **227/179**; 227/19

[58] **Field of Search** 227/19, 179, 175, 176, 227/178

[56] **References Cited**

U.S. PATENT DOCUMENTS

3,193,165	7/1965	Akhalaya et al. .	
3,593,903	7/1971	Astafiev et al. .	
4,198,982	4/1980	Fortner et al. .	
4,304,236	12/1981	Conta et al. .	
4,319,576	2/1986	Rothfuss .	
4,379,457	4/1983	Gravener et al. .	
4,473,077	9/1984	Noiles et al. .	
4,476,863	10/1984	Kanshin et al. .	
4,505,272	3/1985	Utyamyshev .	
4,537,193	8/1985	Tanner .	
4,566,620	1/1986	Green et al.	227/19
4,573,468	3/1986	Conta et al. .	
4,576,167	3/1986	Noiles .	
4,603,693	8/1986	Conta et al. .	
4,646,745	3/1987	Noiles .	
4,671,445	6/1987	Barker et al.	227/19
4,817,847	4/1989	Redtenbacher et al. .	
4,848,367	7/1989	Avant et al. .	
4,873,977	10/1989	Avant et al. .	
5,104,025	4/1992	Main et al. .	
5,108,420	4/1992	Marks .	
5,119,983	6/1992	Green et al. .	
5,122,156	6/1992	Green et al. .	
5,139,513	8/1992	Segato	227/179 X
5,271,543	12/1993	Grant et al.	227/19 X

FOREIGN PATENT DOCUMENTS

1136020	12/1979	Canada .
0190022	8/1986	European Pat. Off. .
282157	9/1988	European Pat. Off. .
1057729	5/1959	Fed. Rep. of Germany .
3301713	7/1984	Fed. Rep. of Germany .
1461464	12/1966	France .
1588250	4/1970	France .
2443239	12/1979	France .
7711347	4/1979	Netherlands .
WO8706448	11/1987	PCT Int'l Appl. .
WO9006085	6/1990	PCT Int'l Appl. .

OTHER PUBLICATIONS

"Use of the Stapler in Interior Reception for Cancer of the Rectosigmoid", Resnick et al., *Israel Journal of Medical Sciences*, vol. 19, 1983, pp. 128–133.

"New Method of Bowel Stoma Formation", *American Journal of Surgery*, vol. 152, Nov. 1986, pp. 545–548.

EEA Anvil with a Separate Short-Shaft-Non Confidential Disclosure Agreement-Sep. 1981.

"Minimally Invasive Colon Resection (Laparoscopic Colectomy)", Jacobs et al., *Surgical Laparoscopy & Endoscopy*, vol. 1, No. 3, Sep. 1991, pp. 144–150.

U.S. Surgical Corporation, "Auto Suture Information Booklet" 1990.

Primary Examiner—Rinaldi I. Rada

[57] **ABSTRACT**

A detachable anvil assembly for use with an apparatus for performing circular anastomosis of tubular organs includes an elongated anvil rod having proximal and distal end portions and an anvil head mounted to the distal end portion of the anvil rod. The distal end portion is pivotally mounted and is adapted to pivot approximately plus or minus ninety degrees relative to a longitudinal axis defined by the rod. An elongated delivery member detachably receives the anvil assembly and facilitates delivery of the anvil assembly to the operative site. The pivoting feature of the distal end reduces the transverse profile of the assembly which consequently facilitates introduction and advancement of the anvil assembly within the tubular organ.

15 Claims, 6 Drawing Sheets

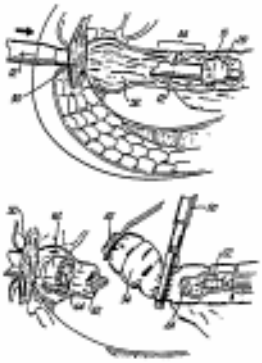

U.S. Patent Sep. 6, 1994 Sheet 1 of 6 5,344,059

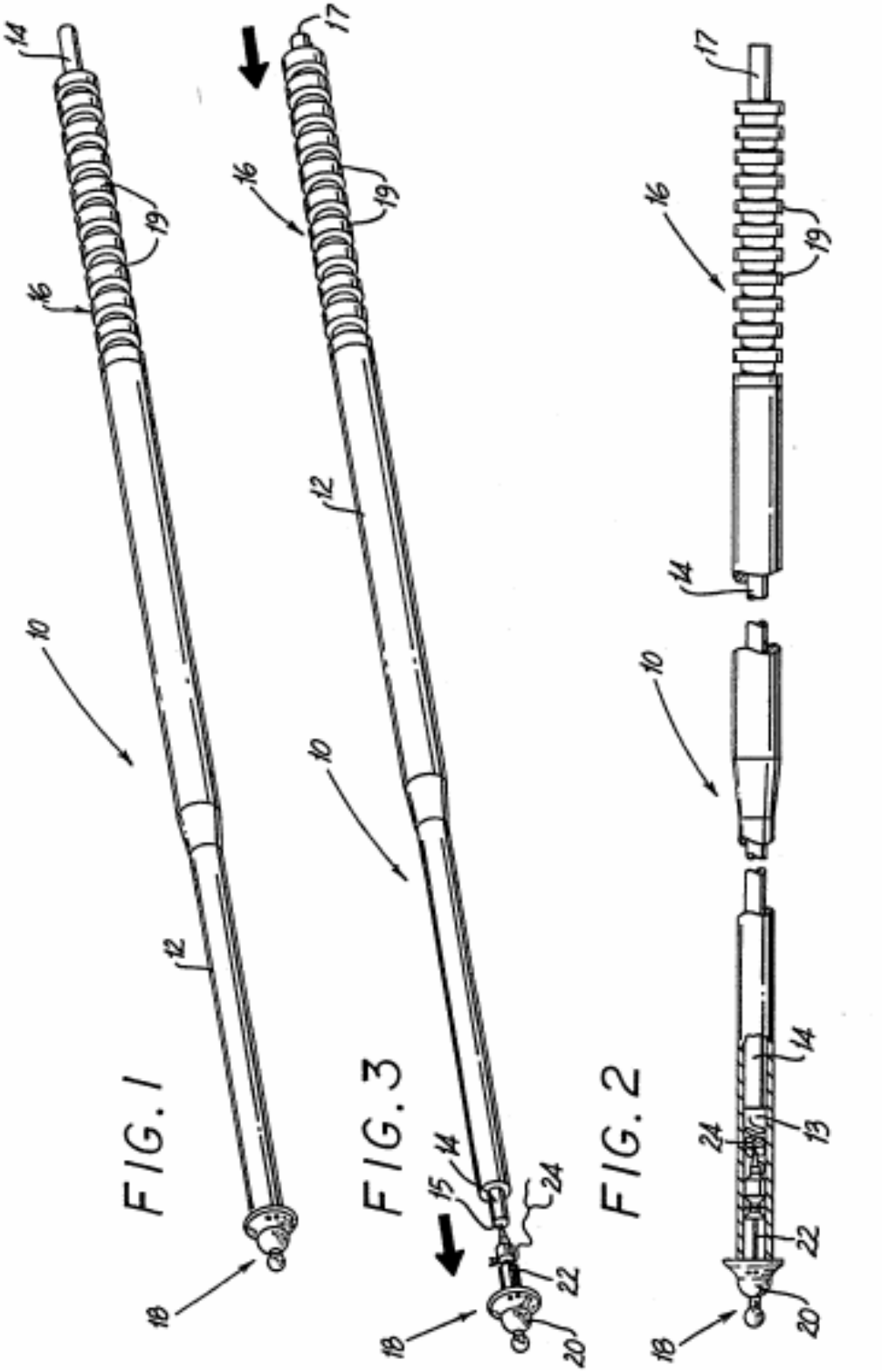

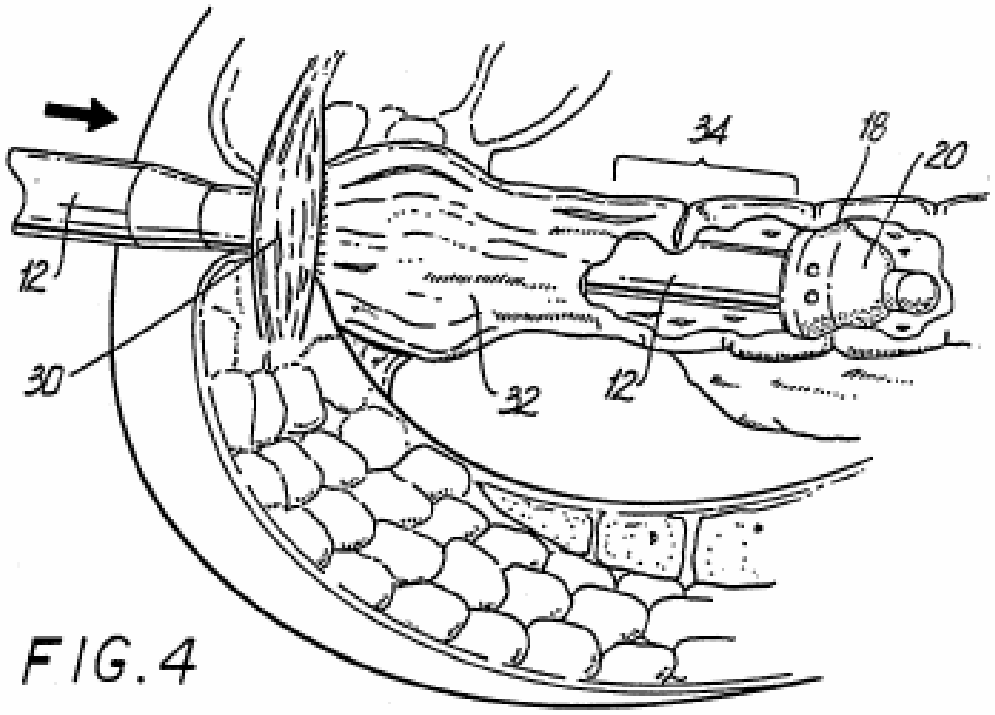

FIG. 4

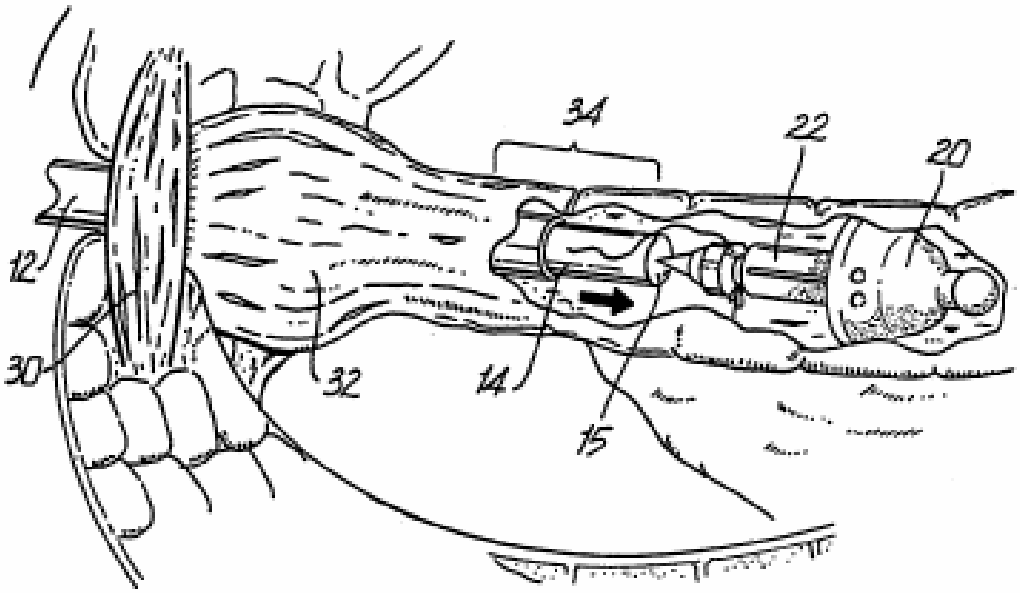

FIG. 5

U.S. Patent Sep. 6, 1994 Sheet 3 of 6 5,344,059

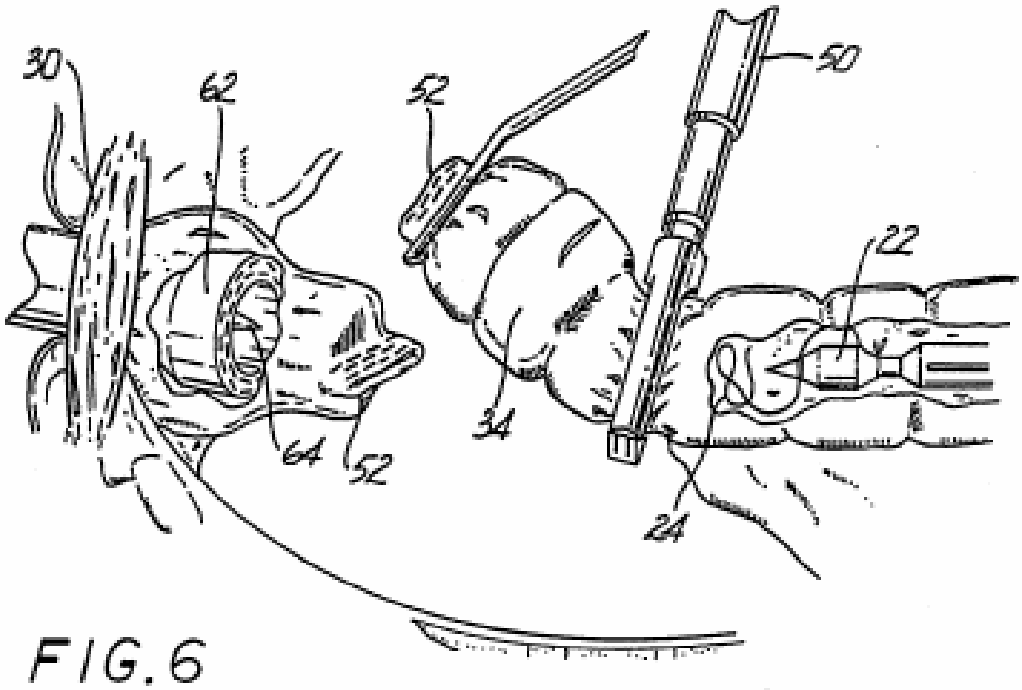

FIG. 6

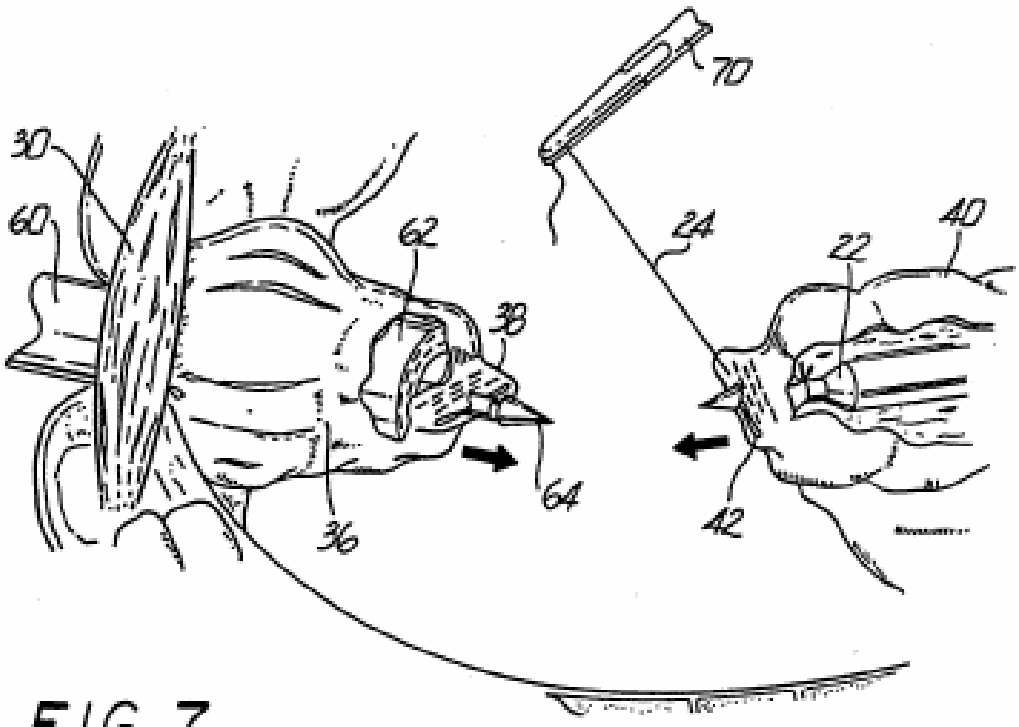

FIG. 7

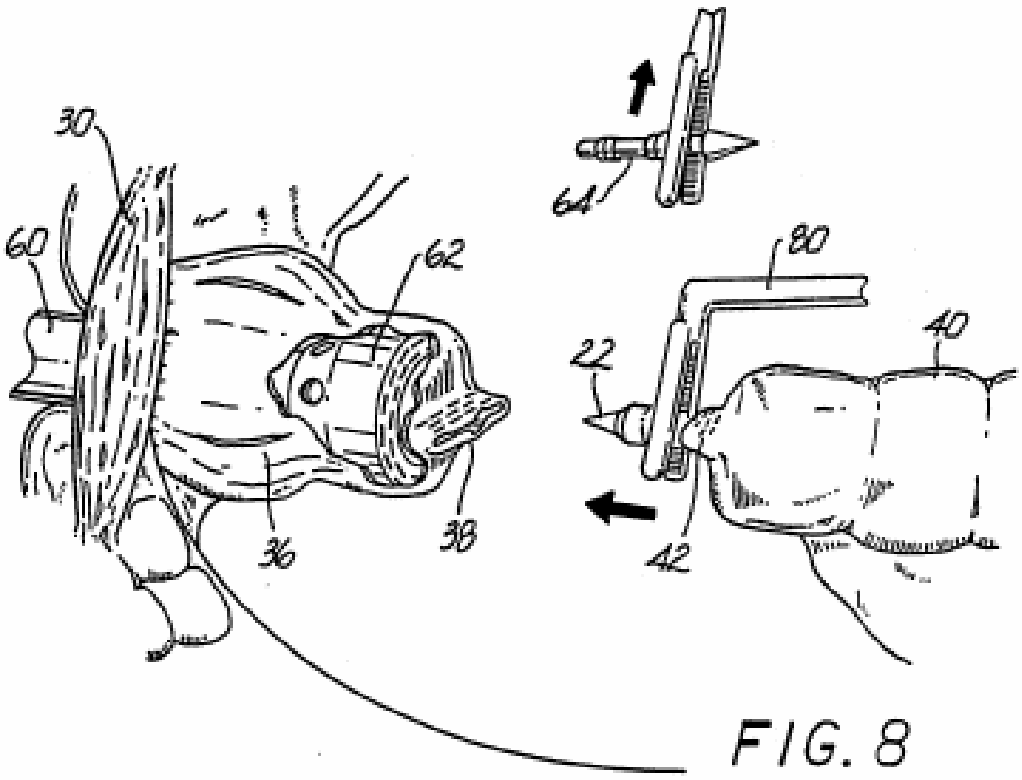

FIG. 8

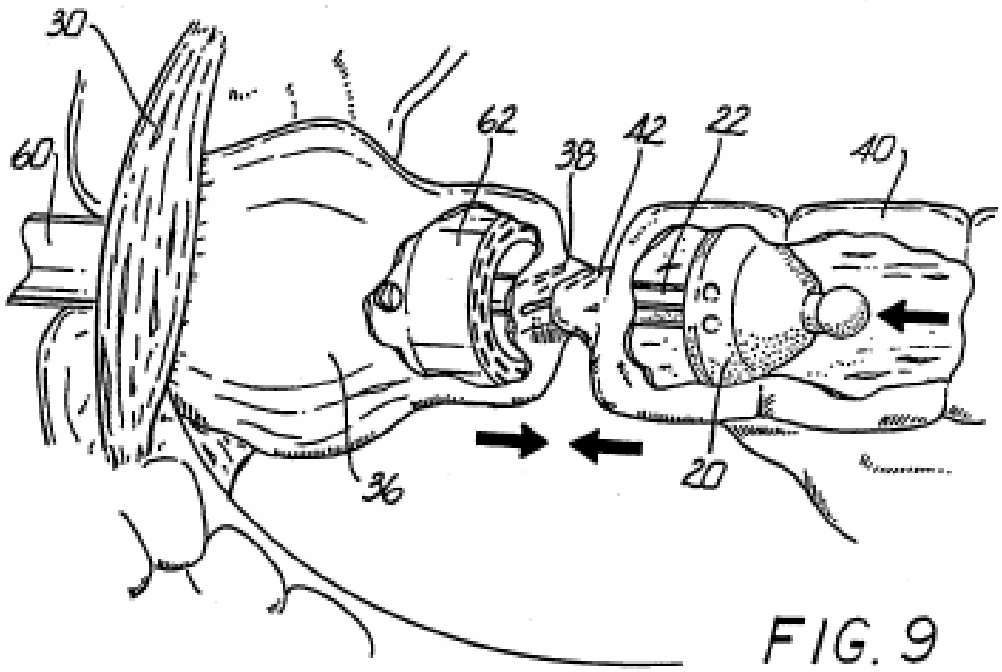

FIG. 9

U.S. Patent Sep. 6, 1994 Sheet 5 of 6 5,344,059

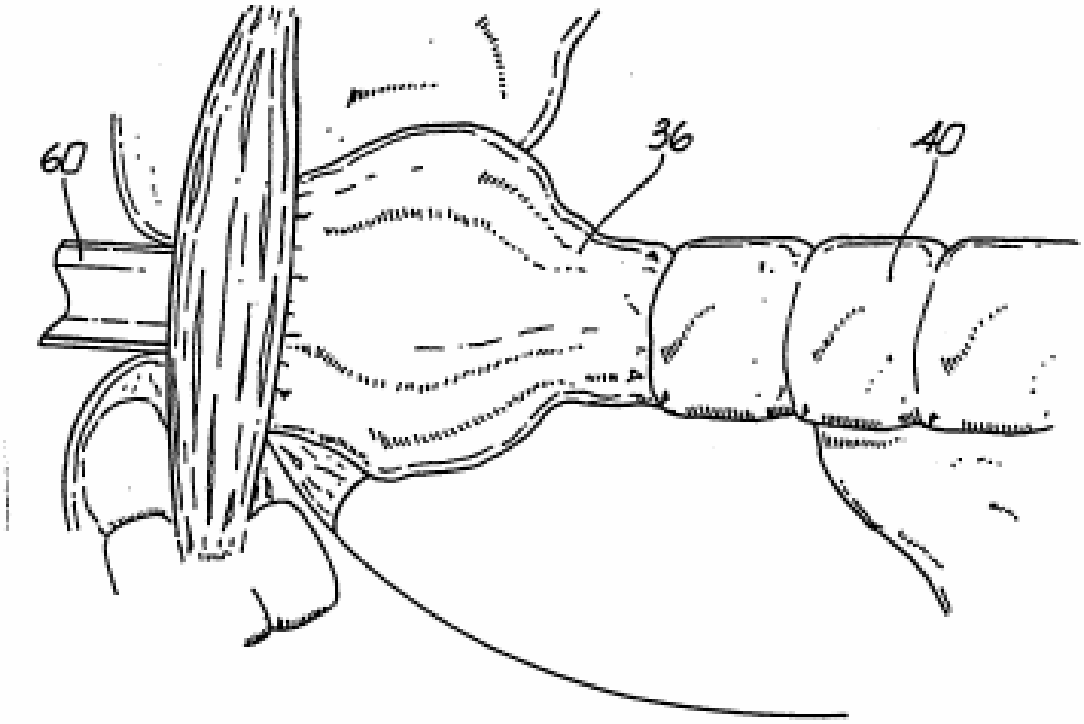

FIG. 10

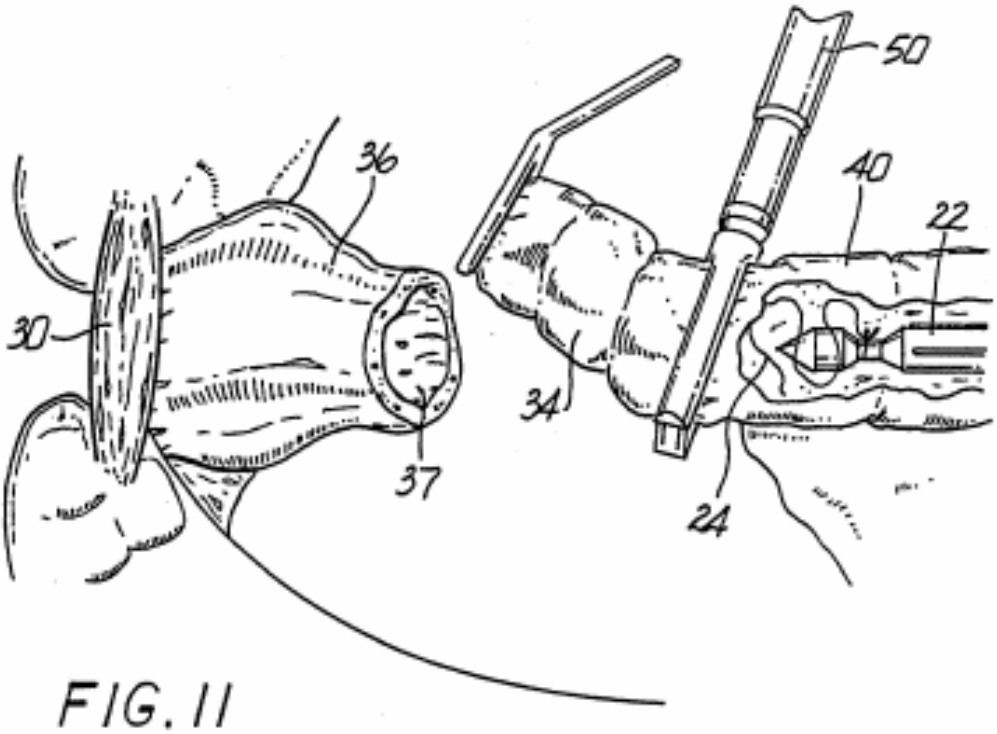

FIG. 11

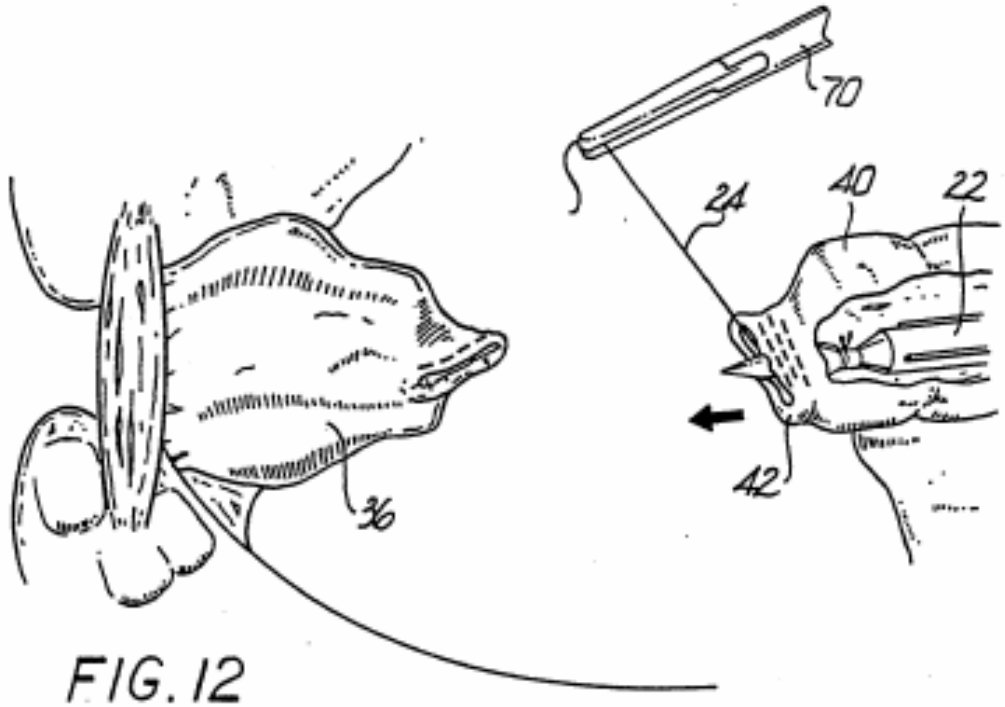

FIG. 12

SURGICAL APPARATUS AND ANVIL DELIVERY SYSTEM THEREFOR

CROSS REFERENCE TO RELATED APPLICATION

This is a continuation-in-part of copending application Ser. No. 07/886,040, filed May 19, 1992.

BACKGROUND OF THE INVENTION

1. Field of the Invention

The present invention relates generally to an apparatus for performing circular anastomosis of hollow tissue organs and more particularly to an anvil delivery system for use with the apparatus to facilitate introduction and manipulation of an anvil through hollow organ tissue.

2. Description of the Prior Art

Anastomosis is the surgical joining of separate hollow organ sections so that the sections intercommunicate with each other. Typically, the anastomosis procedure follows surgery in which a diseased or defective section of hollow tissue is removed and the remaining end sections are to be joined. Depending on the desired anastomosis procedure, the end sections may be joined by either circular, end-to-side or side-to-side organ reconstruction methods.

In a circular anastomosis procedure, the two ends of the organ sections are joined by means of a stapling instrument which drives a circular array of staples through the end sections and simultaneously cores any overlapping tissue to free the tubular passage.

Examples of instruments for performing circular anastomosis of hollow organs are described in U.S. Pat. Nos. 4,304,236, 4,379,457, 4,573,468, 4,576,167, 4,603,693, 4,646,745, 5,119,983 and 5,122,156. These instruments typically include an elongated shaft having a handle portion at a proximal end to actuate the instrument and a staple holding component disposed at a distal end. An anvil assembly including an anvil rod with attached anvil head is mounted to the distal end. Opposed end portions of the organs to be stapled are clamped between the anvil head and the staple holding component. The clamped tissue is stapled by driving one or more staples from the staple holding component so that the ends of the staples pass through the tissue and are clinched by the anvil head.

In some applications of the circular anastomosis procedure, the anvil rod with attached anvil head is mounted to the distal end of the shaft prior to insertion of the instrument into the tissue to be anastomosed. However, in other applications, it is preferable to utilize a detachable anvil rod which may be mounted to the instrument subsequent to positioning of the instrument and the anvil assembly within their respective tissue sections. In such instances, the stapling instrument and the anvil assembly are separately applied to the operative site. Each tissue section is then secured to their respective anvil or staple holding component by a purse string. The anvil assembly is mounted to the surgical instrument by inserting a mounting portion of the anvil rod within the distal end of the instrument so that a mounting mechanism within the instrument securely engages the rod. Preferably, preparation of the tissue sections to be joined and mounting of the anvil rod to the instrument are performed using minimally invasive surgical techniques, i.e., under laparoscopic guidance.

A particular difficulty concerning the aforedescribed approach to perform anastomosis of hollow body organs with a detachable anvil assembly, whether the anastomosis is performed laparoscopically or by conventional surgical techniques, concerns delivery and placement of the anvil assembly at the desired location within the hollow organ. This difficulty is attributed to, inter alia, the fact that the anvil assembly, particularly, the mounted anvil head, presents an obtrusive profile which engages the inner wall of the hollow organ during advancement therethrough. In some instances, the dimension of the anvil head is greater than the cross-sectional dimension of the hollow organ in which it must pass. Consequently, advancement of the anvil assembly through the hollow organ is impeded or possibly prevented. Furthermore, if surgery is being performed laparoscopically, difficulty with maneuvering the anvil assembly through the hollow organ may necessitate an abandonment of such laparoscopic approach and a conversion to a conventional laparotomy to complete the anastomosis.

Accordingly, the present invention is directed to an anvil rod and related applications, which rod and associated structures facilitate delivery of the rod through organ tissue and maneuvering of the rod about the operative site. The structure also facilitates use of the rod in endoscopic and laparoscopic procedures.

SUMMARY OF THE INVENTION

Generally stated, the present invention is directed to an anvil assembly and associated delivery system, the anvil assembly being adapted for use with an apparatus for performing circular anastomosis. The anvil assembly comprises an elongated anvil rod having proximal and distal end portions and an anvil head detachably mounted to the distal end portion of the anvil rod. The distal end portion is pivotally mounted and is adapted to pivot from a first operative position to a second non-operative position, whereby at least one dimension of the anvil assembly in the second non-operative position is effectively less than the corresponding dimension in the first operative position.

In a preferred embodiment, the anvil assembly comprises an elongated anvil rod having proximal and distal end portions and an anvil head detachably mounted to the distal end portion of the anvil rod. The distal end portion is pivotal from a first operative position in general alignment with a longitudinal axis defined by the anvil rod to a second non-operative position angularly displaced relative to the longitudinal axis. In the second non-operative position, the anvil rod presents a less obtrusive profile which, accordingly, facilitates advancement of the anvil assembly through body tissue.

The distal end portion is pivotal with respect to the longitudinal axis defined by the anvil rod through an angle of up to about 90°. In particular, the distal end portion is adapted to pivot up to about 90° with respect to each side of the longitudinal axis, thereby providing full pivotal articulation thereof of about 180°.

The distal end portion comprises a circumferential mounting collar which is received within a circular aperture formed within the anvil head to mount the anvil head to the anvil rod. The mounting collar preferably comprises a plurality of longitudinally extending external splines which are engagable with cooperating longitudinally extending internal splines formed within the anvil head to properly align the anvil head with the anvil rod.

The anvil rod also comprises a plurality of longitudinally extending external splines disposed intermediate its proximal and distal end portions. The external splines are engagable with cooperating longitudinally extending internal splines formed within a distal end of the apparatus to properly align the anvil rod with the apparatus.

The anvil apparatus is adapted to be mounted to an elongated delivery member which includes a mounting mechanism for detachably mounting the anvil assembly on a distal end of the elongated delivery member and releasing means for releasing the anvil member from the mounting means. A preferred delivery member is disclosed and described in copending commonly assigned U.S. patent application Ser. No. 07/886,040, filed May 19, 1992, the entire contents of which are incorporated herein by reference.

The present invention is also directed to a surgical apparatus for performing circular anastomosis of first and second tissue sections. The apparatus comprises elongated tubular means having a proximal and a distal end, means for firing a plurality of fasteners from the distal end of the elongated tubular means and anvil means detachably mounted to the distal end of the elongated tubular means. The anvil means comprises an anvil rod having proximal and distal end portions and an anvil head detachably mounted to the distal end portion of the anvil rod. The distal end portion is pivotal from a first operative position in general alignment with a longitudinal axis defined by the anvil rod to a second non-operative position angularly displaced relative to the longitudinal axis. The anvil assembly defines an effective cross-sectional area generally transverse to the longitudinal axis. The effective cross-sectional area of the anvil assembly in the second non-operative position is less than the effective cross-sectional area of the anvil assembly in the first operative position to facilitate introduction and advancement of the anvil assembly through body tissue.

BRIEF DESCRIPTION OF THE DRAWINGS

Preferred embodiments of the invention are described hereinbelow with reference to the drawings wherein:

FIG. 1 is a perspective view of a surgical stapler apparatus for performing anastomosis of hollow organs of the type contemplated by the present invention;

FIG. 2 is a side plan view of the detachable anvil rod constructed according to the present invention illustrating the pivotal distal end portion;

FIG. 3 is a sectional view with parts separated of the distal end portion and the remaining portion of the rod illustrating the mounting components for pivotally mounting the distal end portion;

FIG. 4 is a side plan view of the detachable anvil rod of FIG. 2 with mounted anvil head illustrating the distal end portion of the rod in a generally aligned operative position;

FIGS. 5A–5B are side plan views similar to the view of FIG. 4 illustrating the distal end portion of the anvil rod pivoted 90° with respect to each side of the longitudinal axis defined by the anvil rod;

FIG. 6 is a side view of a delivery system used to deliver the anvil rod to a desired predetermined location within a tubular organ;

FIG. 7 is a perspective view of the intestinal area of a patient illustrating the introduction of the surgical apparatus of FIG. 1 prior to mounting of the anvil rod of the present invention to the apparatus; and

FIG. 8 is a perspective view similar to that of FIG. 7 illustrating mounting of the anvil rod of the present invention to the distal end of the surgical apparatus.

DETAILED DESCRIPTION OF THE PREFERRED EMBODIMENTS

Referring initially to FIG. 1, there is illustrated an apparatus 10 for stapling hollow tubular body organs as by circular anastomosis of intestines, colons, or the like. The apparatus may be utilized to attach two tubular body parts or one tubular body part to a non-tubular body part by circular anastomosis and may be adapted to attach the body parts with deformable metallic staples or bio-absorbable two-part body tissue fasteners.

Such apparatus 10 is disclosed and claimed in U.S. Pat. No. 5,119,983, issued Jun. 9, 1992, which is incorporated by reference herein and made a part of this disclosure. This apparatus is a stapler for anastomosis of hollow body organs such as intestines, colons, etc. Other such devices are disclosed in the following U.S patents which are also incorporated by reference herein and made a part of this disclosure: U.S. Pat. No. 4,304,236, issued Dec. 8, 1981; U.S. Pat. No. 4,379,457, issued Apr. 12, 1983; U.S. Pat. No. 4,573,468, issued Mar. 4, 1986; U.S. Pat. No. 4,576,167, issued Mar. 18, 1986; U.S. Pat. No. 4,603,693, issued Aug. 5, 1986; U.S. Pat. No. 4,646,745, issued Mar. 3, 1987 and U.S. Pat. No. 5,122,156, issued Jun. 16, 1992. As will be appreciated from a review of these patents, such devices in some instances may also be manually operated and are sometimes controlled from a location remote from the point of manipulation.

Generally, apparatus 10 includes elongated shaft 12 and handle mechanism 14 attached to a proximal end of the elongated shaft. Handle mechanism 14 includes actuating handles 16 and adjusting wing nut 18. Fastener retainer component 20 is connected to the distal end of shaft 12 and houses an annular array of staples therein. A staple firing mechanism expels the staples from fastener retainer component 20.

An anvil assembly 22 is detachably mounted to the distal end of elongated shaft 12 by a mounting mechanism within the shaft which cooperatively engages the anvil assembly. Anvil 22 includes detachable anvil rod 24 with attached anvil head 26. Anvil head 26 includes staple receiving buckets (not shown) for receiving and clinching the staples expelled by the staple firing mechanism to thereby join the adjacent tissue sections.

Referring now to FIG. 2, there is illustrated the detachable anvil rod 24 constructed according to the present invention. Anvil rod 24 is adapted to be used with apparatus 10 and includes proximal end portion 28 which is received within and engages the mounting mechanism within the distal end of elongated shaft 12. (FIG. 1) Proximal end portion 28 includes a generally conical shaped mounting portion 30 which is advantageously dimensioned to facilitate entry within the distal end of apparatus 10 and which further enables manipulation of rod 24 through body tissue. Proximal end portion 28 also includes an annular recess 32 which is correspondingly configured to be engaged by the mounting mechanism within the distal end of elongated shaft 12 of the apparatus.

A plurality of longitudinally extending external splines 34 are disposed in the general midportion of anvil rod 24. Splines 34 engage correspondingly config-

ured and positioned longitudinal internal splines in the distal end of elongated shaft **12** during mounting of the rod to the apparatus to ensure proper alignment of the rod with the staple firing mechanism. Each external spline **34** has a chamfered and sloped proximal end **36**. Chamfered ends **36** engage the internal splines within elongated shaft **12** and cause the rod to rotate slightly if the internal and external splines are initially misaligned during mounting so as to ensure proper mating between the two components.

Distal end portion **38** of anvil rod **24** includes an anvil head mounting collar **40** for mounting anvil head **26** to the rod. Collar **40** includes a plurality of longitudinally extending external splines **42** which engage with cooperating longitudinally extending internal splines in the anvil head **26** to properly align the staple-receiving buckets in the anvil head with the staples in fastener retainer component **20**. A circumferential groove **44** is formed adjacent collar **40** and is adapted to receive a U-shaped clamp which securely retains the anvil head on the collar.

Distal end portion **38** of anvil rod **24** is pivotally mounted about pivoting pin **46** and is adapted to pivot from a position in general alignment with the remainder of rod **24** through pivoted locations (shown by the arrows) corresponding to plus or minus 90 degrees. As best shown in FIG. **3**, distal end portion **38** includes a projecting member **48** having a generally circular aperture **50** (shown in phantom), which member **48** is received within a recess **52** defined between two correspondingly dimensioned and positioned projection members **54** extending from the main portion of rod **24**. Preferably, a slight groove **56** is formed in the main portion of rod adjacent recess **52** to accommodate projecting member **48** during pivoting action of distal end portion **38**. Projections **54** also include apertures **58** (shown in phantom) which align with aperture **50** formed in projecting member **48** of distal end portion **38** to receive pivoting pin **46** to effect the mounting. Other alternative methods for mounting distal end portion **38** to the main portion of rod **24** may be readily determined by one skilled in the art.

Referring now to FIGS. **4**, **5A** and **5B**, anvil rod **24** is illustrated with anvil head **26** mounted on collar **40** so as to illustrate the advantages of the novel pivoting feature of distal end portion **38**. The pivoting feature of distal end portion **38** facilitates introduction and manipulation of anvil assembly **22** within tubular organ tissue such as the colon, intestines, etc. by orienting anvil head **26** in a manner which reduces the profile of the anvil head and the anvil assembly as the assembly is being advanced through the tubular organ. In particular, when distal end portion **38** is in a generally aligned position as shown in FIG. **4**, which position corresponds to the orientation of a conventional anvil assembly, the anvil assembly **22** presents a relatively large cross-sectional dimension or profile which must pass through the tubular organ. Specifically, the dimension or profile is equal to the diameter of the anvil head, which in many instances, is greater than the corresponding inner dimension of the tubular organ in which it must pass. Consequently, anvil head **26** inherently engages the inner wall of the tubular organ during manipulation and advancement of the anvil assembly **22** and, accordingly, impedes such advancement within the tubular organ.

Referring now to FIGS. **5A** and **5B**, when distal end portion **38** is pivoted to its transverse position by way of the pivoting feature of the present invention, the effective transverse cross-sectional dimension or profile of anvil assembly **22** is substantially reduced. In particular, since anvil head **26** is generally parallel to and flush with anvil rod **24** in this position, the effective transverse cross-sectional dimension of assembly **22** is nearly one-half of the corresponding dimension in the operative position of anvil assembly shown in FIG. **4**. It is to be appreciated that distal end portion **38** may be pivoted through a variety of angles relative to the anvil rod and still present a cross-sectional dimension or profile which is less than that of the generally aligned position of the distal end portion shown in FIG. **4**.

In use, distal end portion **38** may be pivoted prior to introduction of anvil assembly within the tubular organ or may be initially inserted in a generally aligned position in which it subsequently assumes a pivoted position during advancement through the tubular organ due to engagement of anvil head **26** with the inner wall of the tubular organ.

In performing intestinal surgery such as a colonoscopy or a colectomy in which the surgery is followed by anastomosis of hollow tubular organs, anvil assembly **22** may be introduced into the hollow organ through a surgically provided incision, or transanally, and advanced to a predetermined location in the intestinal section so that the anvil assembly may be subsequently mounted to a stapling apparatus to complete the anastomosis.

Referring now to FIG. **6**, there is illustrated an apparatus which may be used to deliver anvil assembly **22** of the present invention to a predetermined desired location within a tubular organ section. This delivery system is disclosed in commonly assigned U.S. patent application Ser. No. 07/886,040, filed May 19, 1992, the contents of which have been incorporated herein by reference. System **60** is particularly adapted to deliver an anvil assembly transanally to a desired portion in the colon and includes an elongated sheath member **62** having a longitudinal bore, a pusher rod **64** slidably movable within the bore of the sheath member and hand grip member **66**.

In use with the anvil assembly **22** of the present invention, anvil rod **24** is inserted within the distal end of sheath **62** to mount the assembly to the system. Thereafter, distal end portion **38** is pivoted to the position shown in either FIGS. **5A** or **5B** to reduce the effective transverse cross-sectional dimension of the anvil assembly **22**. The delivery system is inserted transanally and advanced through the colon to a predetermined desired location in the organ, preferably beyond the diseased section of tissue. The particular orientation of anvil head **24** facilitates introduction and advancement of anvil assembly **22** within the intestinal section. Thereafter, the delivery system is actuated by depressing the proximal end section **64a** of pusher rod **64**, which extends beyond the proximal end of sheath **62**, to advance the pusher rod such that it engages anvil rod **24** and expels the anvil assembly **22** from delivery system **60** and beyond the diseased tissue section. Once anvil assembly **22** is within the organ, the surgeon may perform the desired surgery followed by anastomosis of the hollow organ section.

FIGS. **7** and **8** illustrate the use of apparatus **10** and detachable anvil rod **24** in an anastomosis procedure to effect joining of intestinal sections **66**, **68**. Preferably, the anastomosis procedure is performed using minimally invasive surgical techniques including laparoscopic means and instrumentation. At the point in the

procedure shown in FIG. 7, a diseased intestinal section had been previously removed preferably with a laparoscopic instrument applied to the operative site through an appropriate trocar sleeve. Elongated shaft 12 of apparatus 10 had been inserted transanally into intestinal section 66. Both intestinal sections 66, 68 are also shown temporarily secured about their respective components by conventional means such as a purse string stitch.

In completing the anastomosis, the surgeon through an appropriate trocar sleeve probes within the intestinal section to grasp anvil rod 24, preferably with a grasping instrument 70 inserted within a cannula, and maneuvers rod 24 towards the distal end of elongated shaft 12. Mounting portion 30 of rod 24 is then inserted within the distal end of elongated shaft 12 of the apparatus, as shown in FIG. 8, wherein the mounting mechanism within the distal end of the shaft engages the rod to effect the mounting. Thereafter, the anvil assembly and elongated shaft are approximated to clamp the opposed end portions of tissue between anvil head 26 and fastener retainer component 20. Such approximation will also appropriately orientate the anvil head 26 with the apparatus. The apparatus is fired to complete the anastomosis.

The anvil assembly and associated delivery system of the present invention enhances the surgeon's ability to perform intestinal surgery and anastomosis of tissue sections under laparoscopic guidance at least in part by reducing the profile of the assembly so as to facilitate introduction and advancement of the assembly within relatively narrowly dimensioned tubular organ tissue.

Although the present invention has been shown and described in terms of preferred embodiments, it will be appreciated that various changes and other modifications are contemplated within the spirit and scope of the present invention as defined by the following claims.

What is claimed is:

1. A surgical system for delivering an anvil assembly within a hollow tubular organ, comprising:

a) an anvil assembly for use with an apparatus for performing circular anastomosis, said anvil assembly comprising an elongated anvil rod having a proximal end portion for mounting to an apparatus for performing circular anastomosis, a distal end portion defining a longitudinal axis, and a generally hemisphericalshaped anvil head having an arcuate anvil surface for forming staples ejected by the apparatus, said anvil head defining a central axis and being coaxially mounted to said distal end portion of said anvil rod, said distal end portion being pivotal between a first position and a second position whereby at least one dimension of said anvil assembly in said second position is effectively less than the corresponding dimension in said first position; and

b) an elongated delivery member positionable within a hollow tubular organ, said elongated delivery member including mounting means for releasably mounting said proximal end portion of said anvil rod of said anvil assembly thereto and releasing means for releasing said anvil assembly therefrom.

2. The surgical system according to claim 1 wherein said distal end portion of said anvil rod is pivotal with respect to a longitudinal axis defined by said proximal end portion of said anvil rod through an angle of up to about 90°.

3. The surgical system according to claim 2 wherein said distal end portion said anvil rod is adapted to pivot up to about 90° with respect to said longitudinal axis of said proximal end portion in a first direction and up to about 90° with respect to said longitudinal axis of said proximal end portion in a second direction, whereby full pivotal articulation thereof is provided of about 180°.

4. A surgical system for delivering an anvil assembly within a hollow tubular organ, comprising:

a) an anvil assembly for use with an apparatus for performing circular anastomosis, said anvil assembly comprising an elongated anvil rod having a proximal end portion for mounting to an apparatus for performing circular anastomosis, a distal end portion defining a longitudinal axis and a generally hemispherical-shaped anvil head defining an arcuate anvil surface for forming staples ejected by the apparatus, said anvil head defining a central axis and being coaxially mounted to said distal end portion of said anvil rod, said proximal end portion defining a longitudinal axis, said distal end portion of said anvil rod being pivotal between a first operative position wherein said longitudinal axis of said distal end portion is in general alignment with said longitudinal axis of said proximal end portion and a second non-operative position wherein said longitudinal axis of said distal end portion is angularly displaced relative to said longitudinal axis of said proximal end portion; and

b) an elongated delivery member positionable within a hollow tubular organ, said delivery member including:

proximal and distal end portions;

mounting means associated with said distal end portion of said delivery member for releasably mounting said proximal end portion of said anvil rod of said anvil assembly; and

releasing means for releasing said anvil assembly from said mounting means.

5. The surgical system according to claim 4 wherein said anvil rod of said anvil assembly comprises a plurality of longitudinally extending external splines disposed intermediate said proximal and distal end portions, said external splines engagable with cooperating longitudinally extending internal splines formed within a distal end of an apparatus for performing circular anastomosis to properly align said anvil rod with the apparatus.

6. A surgical system for delivering an anvil assembly within a hollow tubular organ comprising:

a) an anvil assembly for use with an apparatus for performing circular anastomosis, said anvil assembly comprising an anvil rod having proximal and distal end portions and an anvil head mounted to said distal end portion, said proximal end portion including a conical shaped mounting portion to facilitate mounting of said anvil rod to an apparatus for performing circular anastomosis, said proximal end portion defining a longitudinal axis, said distal end portion being pivotable between a first position and a second position wherein at least one dimension of said anvil assembly in said second position is effectively less than the corresponding dimension in said first position; and

b) an elongated delivery member positionable within a hollow tubular organ, said delivery member including mounting means for releasably mounting said proximal end portion of said anvil rod of said anvil assembly thereto and releasing means for releasing said anvil assembly therefrom.

7. The surgical system according to claim 6 wherein said distal end portion of said anvil rod is pivotal with respect to said longitudinal axis defined by said proximal end portion of said anvil rod through an angle of up to about 90°.

8. The surgical system according to claim 7 wherein said distal end portion of said anvil rod is adapted to pivot up to about 90° with respect to said longitudinal axis in a first direction and up to about 90° with respect to said longitudinal axis in a second direction, whereby full pivotal articulation thereof is provided of about 180°.

9. The surgical system according to claim 6 wherein said distal end portion of said anvil rod comprises a circumferential mounting collar, said mounting collar being received within a circular aperture formed within said anvil head to mount said anvil head to said anvil rod.

10. The surgical system according to claim 9 wherein said mounting collar comprises a plurality of longitudinally extending external splines engagable with cooperating longitudinally extending internal splines formed within said anvil head to properly align said anvil head with said anvil rod.

11. The surgical system according to claim 6 wherein said elongated delivery member defines proximal and distal end portions and includes a longitudinal bore extending therethrough.

12. The surgical system according to claim 11 wherein said anvil rod of said anvil assembly is positioned within said distal end portion of said delivery member and within said longitudinal bore to releasably mount said anvil assembly to said delivery member.

13. The surgical system according to claim 12 wherein said anvil rod is configured and dimensioned to form a friction fit between an outer peripheral surface of said anvil rod and an inner peripheral wall of said delivery member to releasably mount said anvil assembly to said distal end portion of said delivery member.

14. The surgical apparatus of claim 12 wherein said releasing means comprises a rod member having proximal and distal end portions, said rod member received within said longitudinal bore of said elongated delivery member and distally advanceable relative to said delivery member such that a bearing surface disposed at said distal end portion of said rod member engages said anvil rod of said anvil assembly to effect distal displacement of said anvil assembly and release of said anvil assembly from said distal end portion of said delivery member.

15. A surgical system for delivering an anvil assembly within a hollow tubular organ, comprising:

a) an anvil assembly for use with an apparatus for performing circular anastomosis, said anvil assembly comprising an elongated anvil rod having a proximal end portion for mounting to an apparatus for performing circular anastomosis, a distal end portion defining a longitudinal axis and a generally hemispherical-shaped anvil head defining an arcuate anvil surface for forming staples ejected by the apparatus, said anvil head defining a central axis and being coaxially mounted to said distal end portion of said anvil rod, said proximal end portion defining a longitudinal axis, said distal end portion of said anvil rod being pivotal between a first operative position wherein said longitudinal axis of said distal end portion is in general alignment with said longitudinal axis of said proximal end portion and a second nonoperative position wherein said longitudinal axis of said distal end portion is angularly displaced relative to said longitudinal axis of said proximal end portion, said anvil rod including a plurality of longitudinally extending external splines disposed intermediate said proximal and distal end portions, said external splines engageable with cooperating longitudinally extending internal splines formed within a distal end of the apparatus to properly align said anvil rod with the apparatus; and

b) an elongated delivery member positionable within a hollow tubular organ, said delivery member including:

proximal and distal end portions;

mounting means associated with said distal end portion of said delivery member for releasably mounting said proximal end portion of said anvil rod of said anvil assembly; and

releasing means for releasing said anvil assembly from said mounting means.

* * * * *

A.5 US Patent 6,193,129: Cutting blade for a surgical anastomosis stapling instrument, Bittner et al.; any 2001.

US006193129B1

(12) **United States Patent**
Bittner et al.

(10) **Patent No.: US 6,193,129 B1**
(45) **Date of Patent: Feb. 27, 2001**

(54) **CUTTING BLADE FOR A SURGICAL ANASTOMOSIS STAPLING INSTRUMENT**

(75) Inventors: **John Raymond Bittner**, Palmyra, VA (US); **Aaron Christopher Voegele**, Loveland; **Dale Gene Boling**, Georgetown, both of OH (US)

(73) Assignee: **Ethicon Endo-Surgery, Inc.**, Cincinnati, OH (US)

(*) Notice: Subject to any disclaimer, the term of this patent is extended or adjusted under 35 U.S.C. 154(b) by 0 days.

(21) Appl. No.: **09/490,855**

(22) Filed: **Jan. 24, 2000**

(51) **Int. Cl.**[7] **A61B 17/068**
(52) **U.S. Cl.** **227/180.1**; 227/19
(58) **Field of Search** 227/19, 175.1, 227/176.1, 179.1, 180.1; 606/219

(56) **References Cited**

U.S. PATENT DOCUMENTS

4,207,898		6/1980	Becht .	
4,289,133		9/1981	Rothfuss .	
4,319,576		3/1982	Rothfuss .	
4,893,622	*	1/1990	Green et al.	227/180.1
5,163,943	*	11/1992	Mohiuddin et al.	227/180.1
5,271,544	*	12/1993	Fox et al.	227/19
5,639,008	*	6/1997	Gallagher et al.	227/175.1
5,860,581	*	1/1999	Robertson et al.	227/180.1

* cited by examiner

Primary Examiner—Scott A. Smith
(74) *Attorney, Agent, or Firm*—Louis J. Capezzuto

(57) **ABSTRACT**

A surgical cutting and stapling instrument has an improved blade. The surgical instrument has a handle with a moveable firing trigger, a shaft extending from the handle, and a stapling head at the end of the shaft. An array of staples are located within the stapling head. An anvil is coupled to the stapling head and has staple forming pockets facing and in alignment with the staples. A breakaway washer is located within the anvil assembly and has a pair of parallel spaced walls with a thin web extending therebetween. The thin web faces the distal face of the stapling head. A blade is located within the distal face of the stapling head and has a distal cutting edge and at least one wedge spike facing the annular thin web of the breakaway washer. When the anvil is moved adjacent to the stapling head and the firing trigger is closed, the staples are formed and the blade is moved to sever the breakaway washer in a two step process. First, the wedge spike of the blade penetrates the thin web of the breakaway washer and weakens the thin web by propagating a crack within the thin web. Second, once the breakaway washer is cracked, the distal cutting edge of the blade severs the thin web.

9 Claims, 9 Drawing Sheets

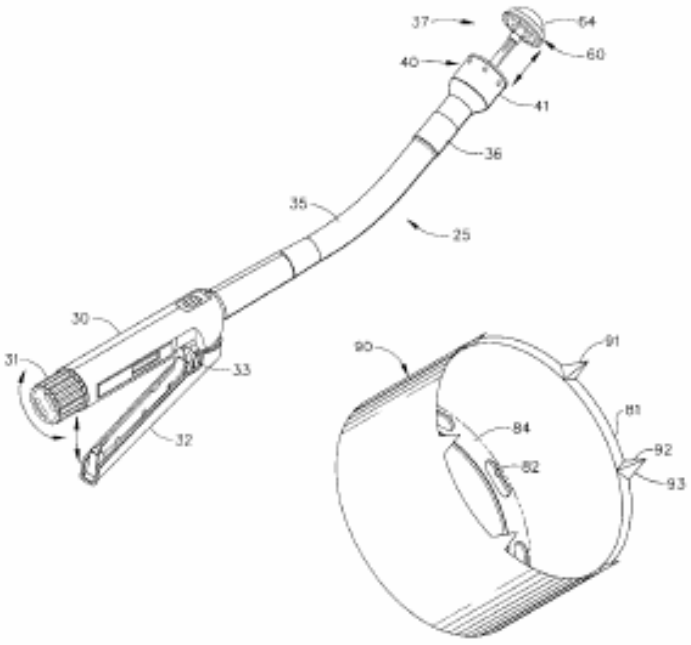

U.S. Patent Feb. 27, 2001 Sheet 1 of 9 US 6,193,129 B1

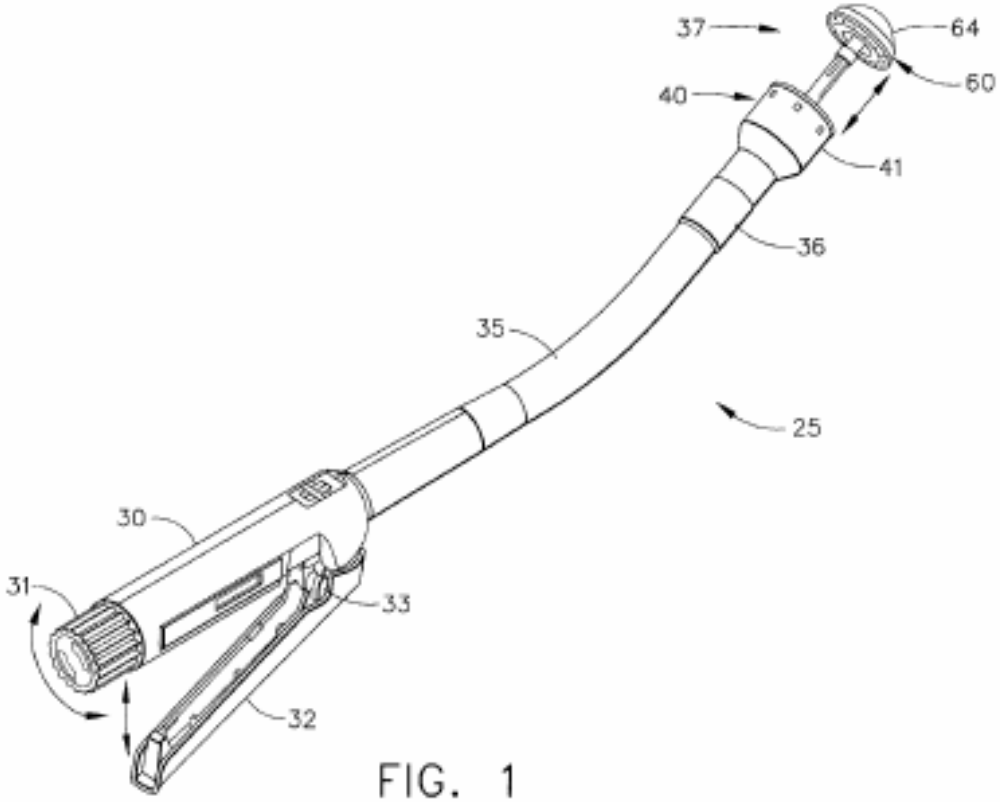

FIG. 1

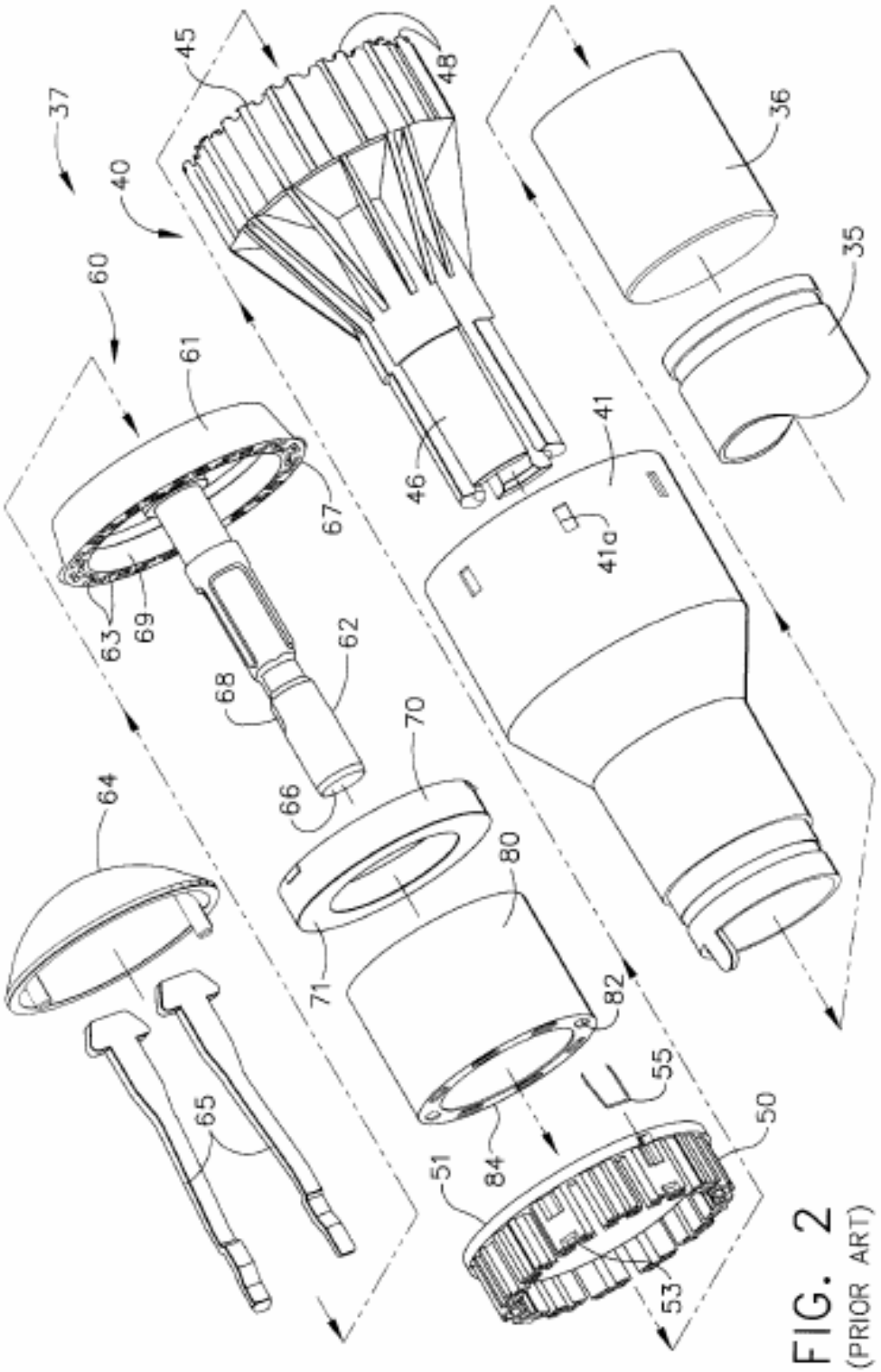

FIG. 2
(PRIOR ART)

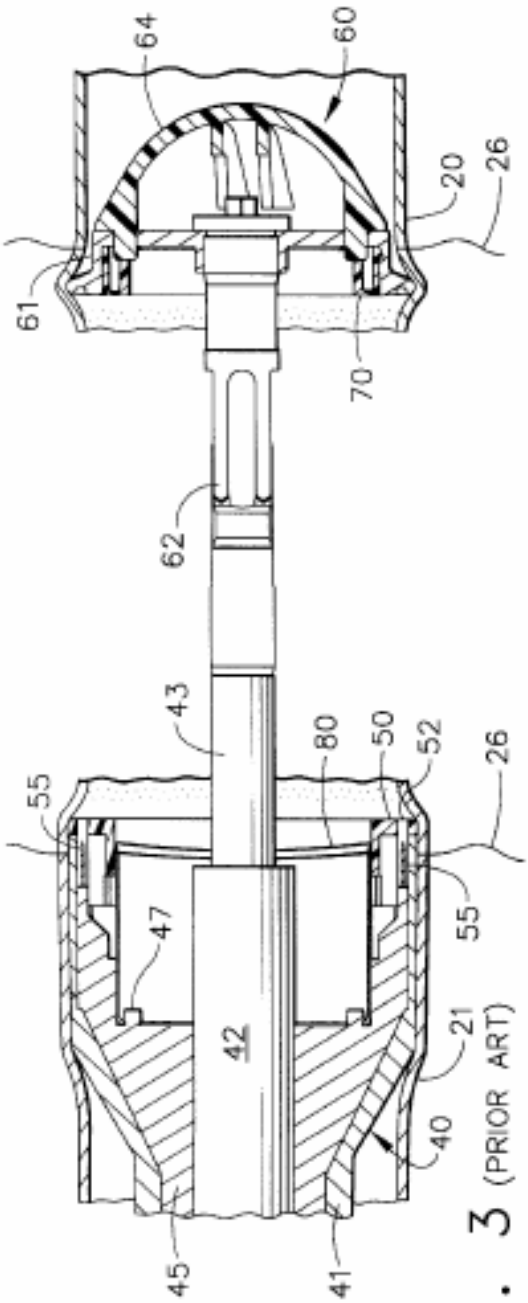

FIG. 3 (PRIOR ART)

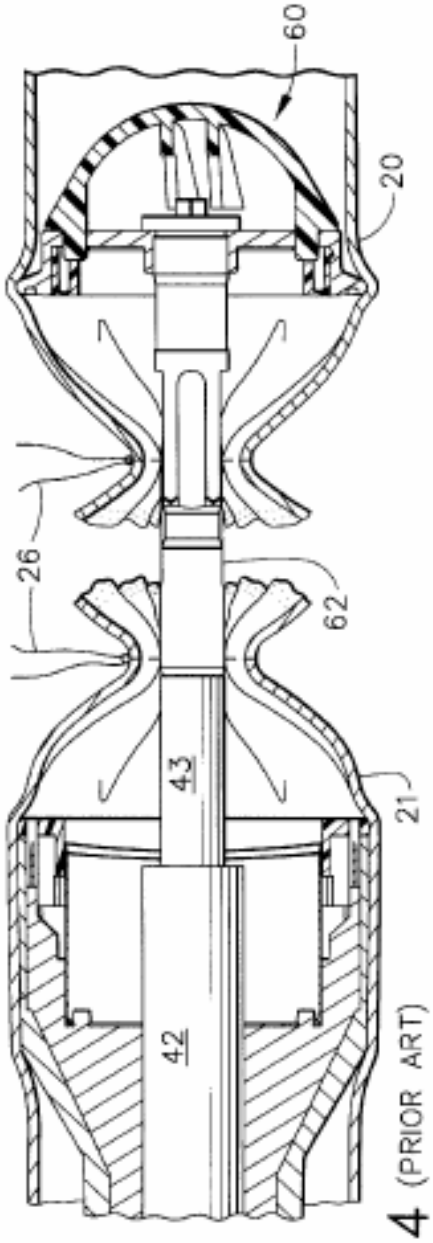

FIG. 4 (PRIOR ART)

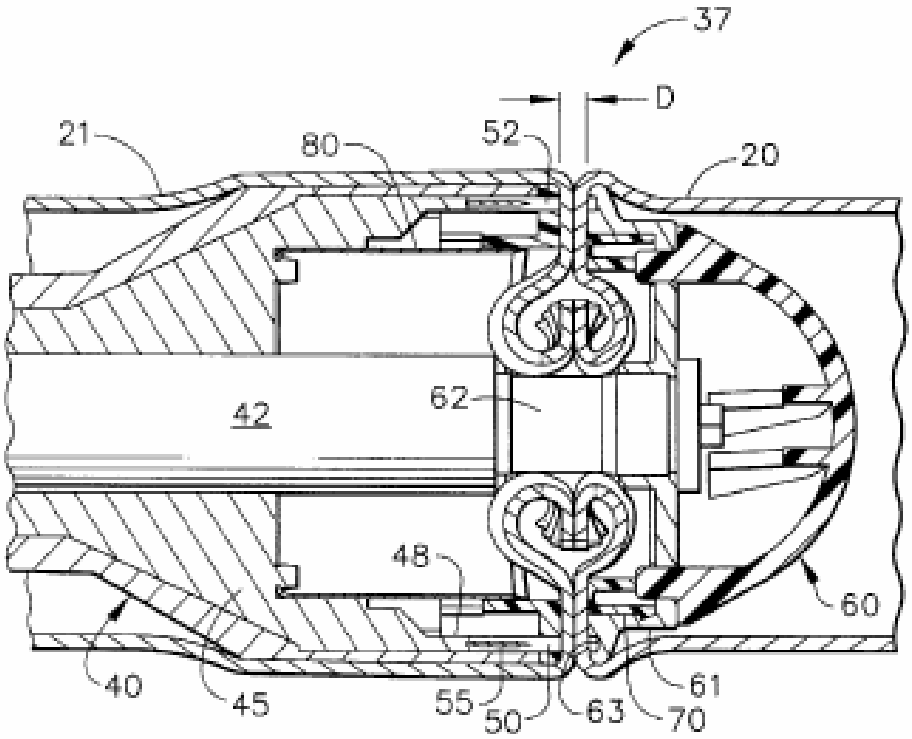

FIG. 5 (PRIOR ART)

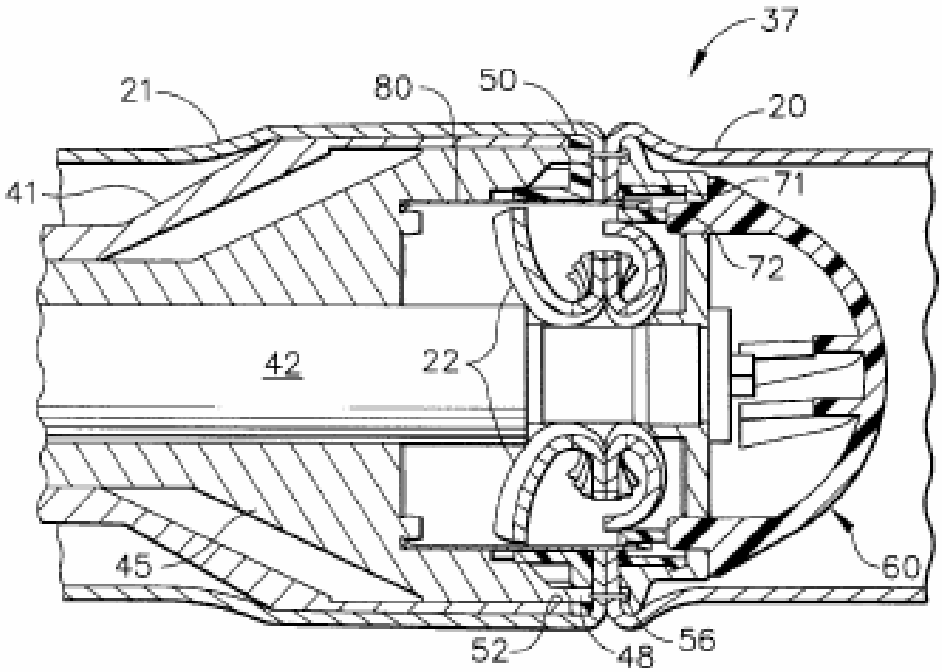

FIG. 6 (PRIOR ART)

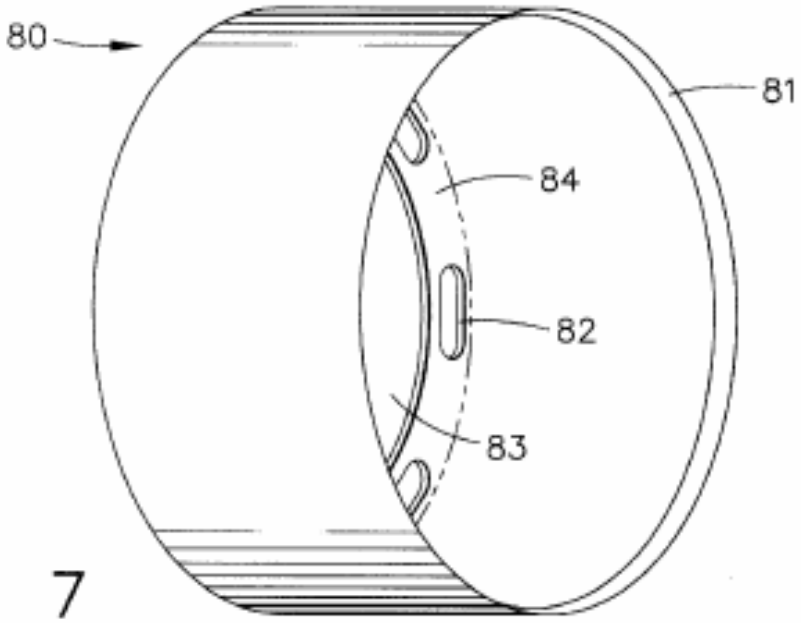

FIG. 7
(PRIOR ART)

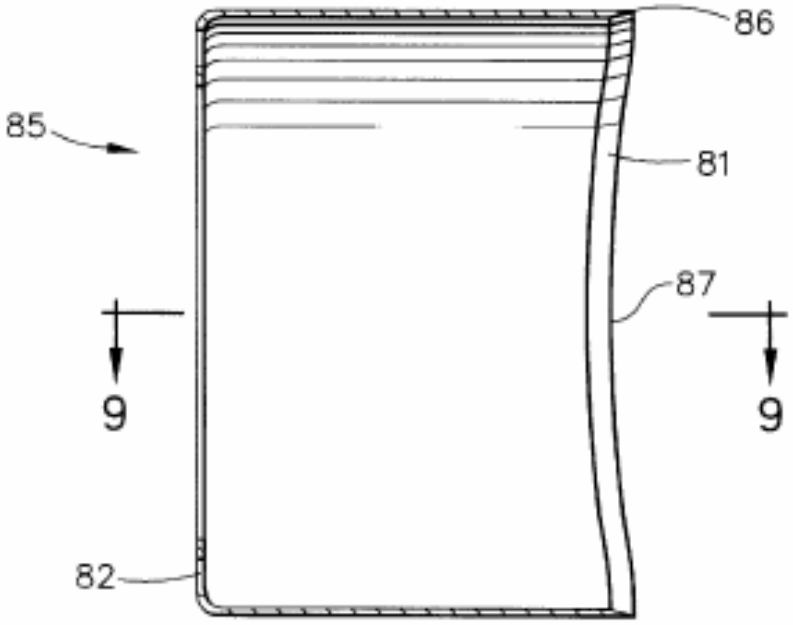

FIG. 8 (PRIOR ART)

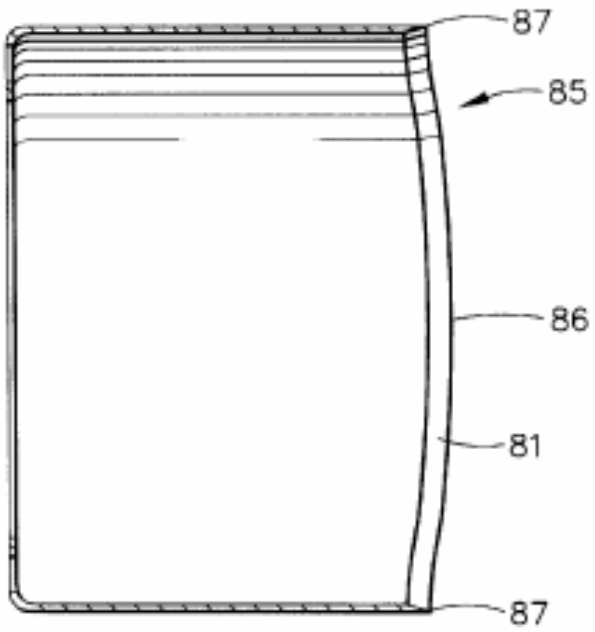

FIG. 9 (PRIOR ART)

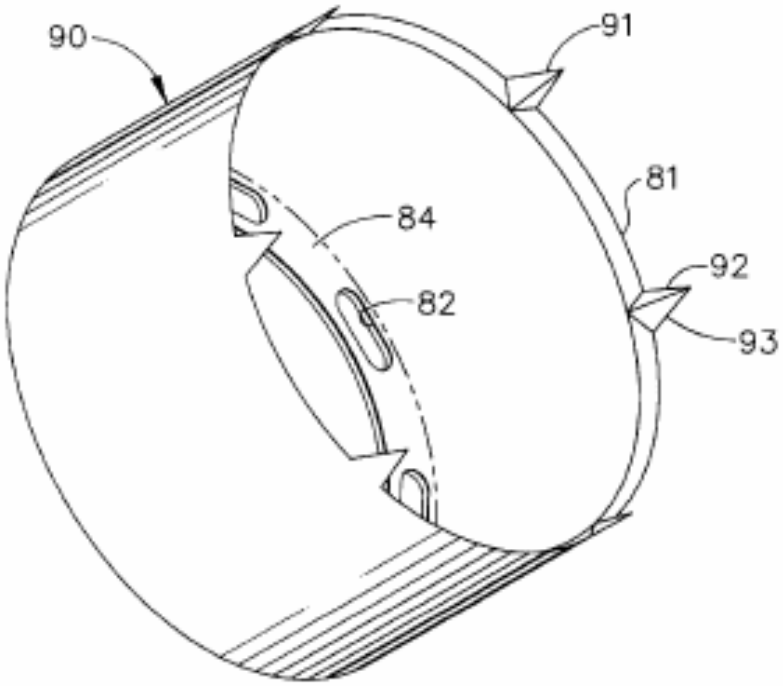

FIG. 10

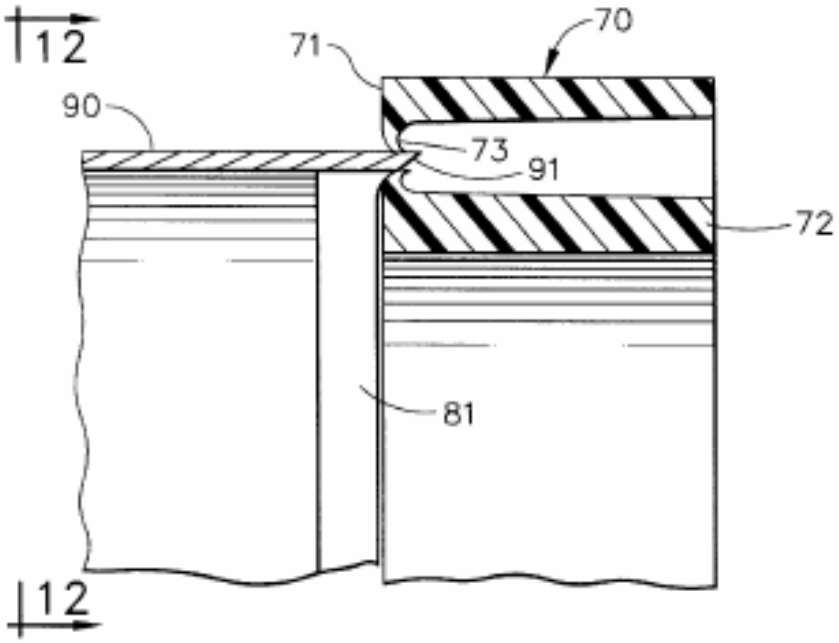
12
71
70
90
73
91
72
81
12

FIG. 11

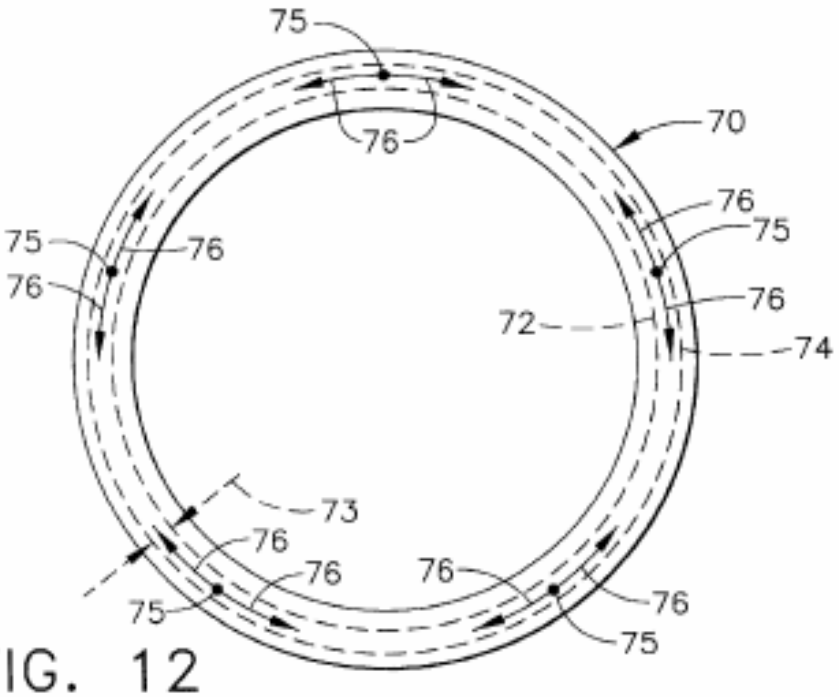
75
76
70
76
75
75
76
76
72
74
73
76
76
76
76
75
75

FIG. 12

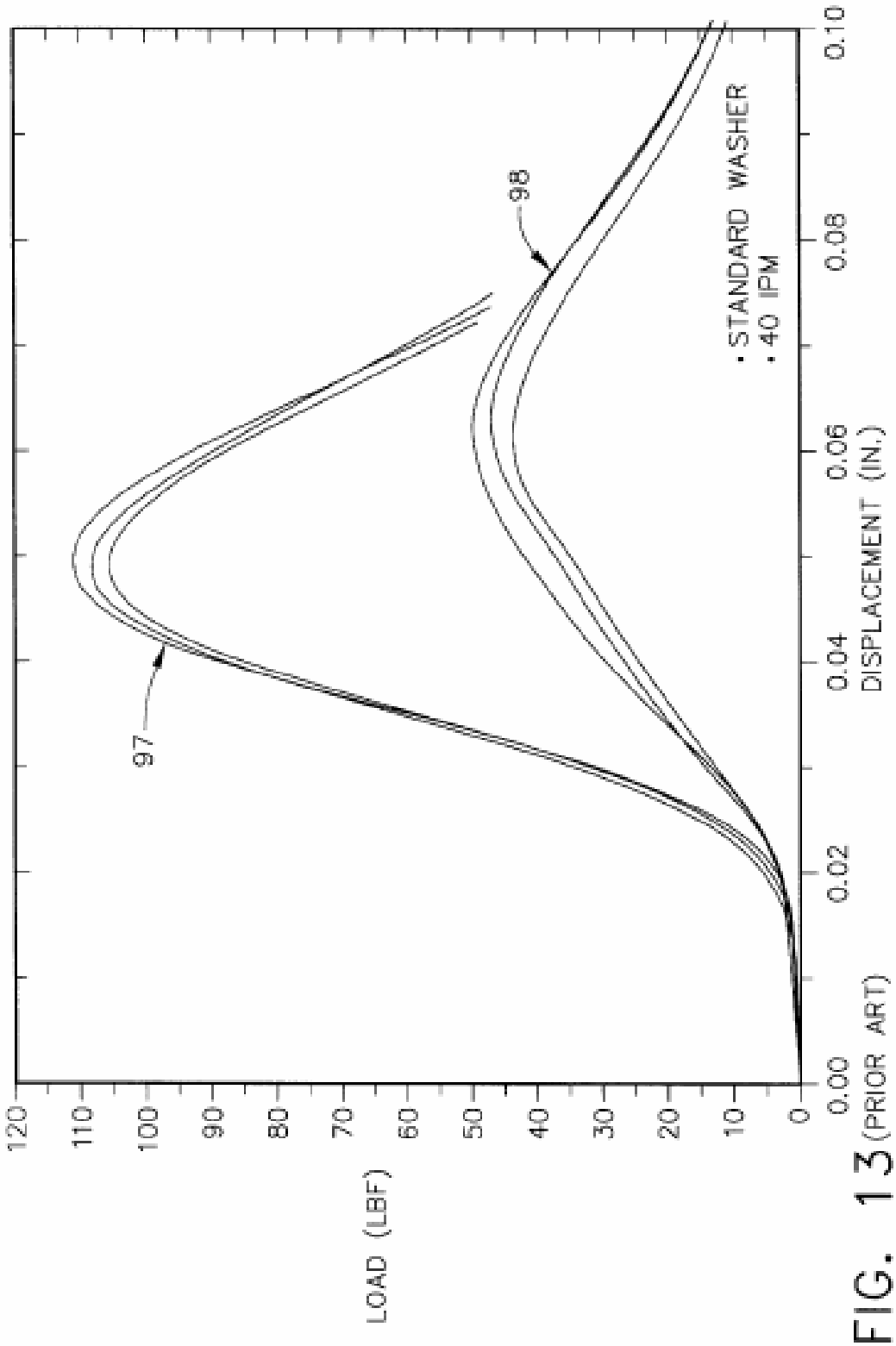

FIG. 13 (PRIOR ART)

U.S. Patent Feb. 27, 2001 Sheet 9 of 9 US 6,193,129 B1

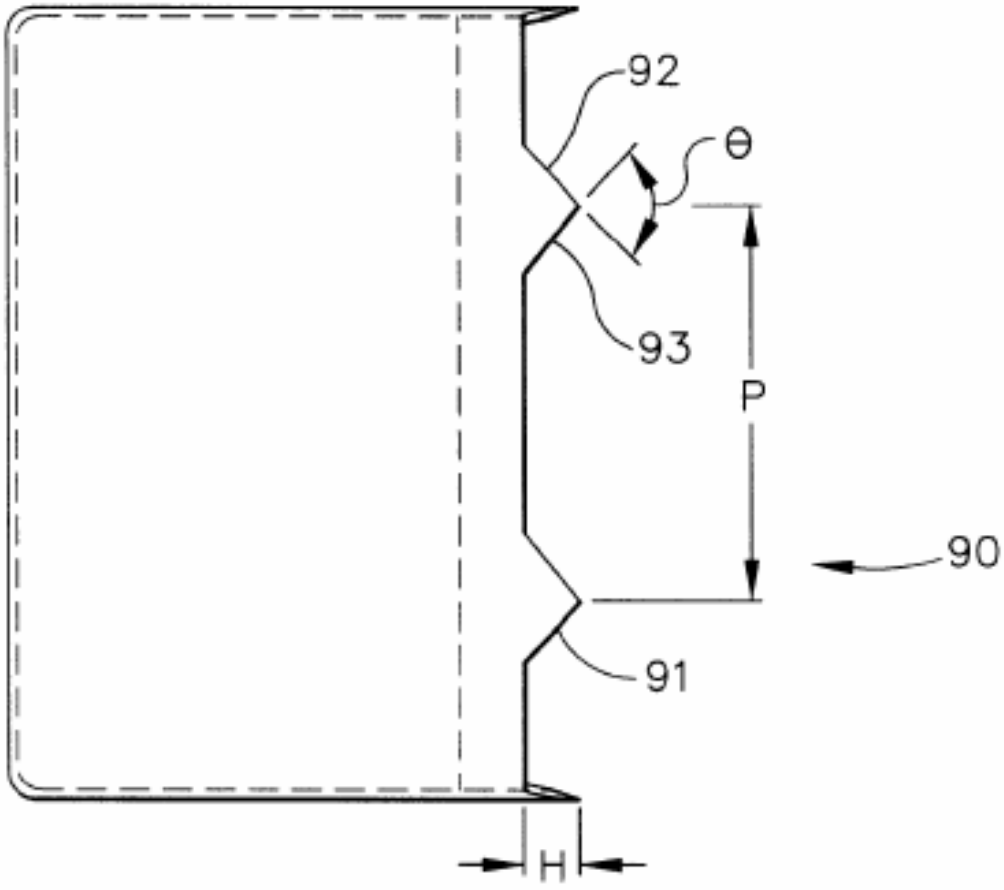

FIG. 14

CUTTING BLADE FOR A SURGICAL ANASTOMOSIS STAPLING INSTRUMENT

FIELD OF THE INVENTION

The present invention relates, in general, to surgical stapling instruments for applying surgical staples to tissue and, more particularly, to a circular surgical stapling instrument having an improved circular blade.

BACKGROUND OF THE INVENTION

Circular surgical staplers are well known in the surgical field for the ease with which the instrument performs a previously difficult anastomotic stapling operation—the hemostatic joining of two pieces of tubular tissue together with a ring of staples. Such an instrument is ideally suited for intestinal or bowel surgery, and an instrument of this type is the Endopath™ ILS Endoscopic Curved Intraluminal Stapler manufactured by Ethicon Endo-Surgery, Cincinnati, Ohio. The circular stapling instrument has a distal stapling head that is available in a variety of sizes to match the organ size of the patient.

Circular stapling instruments are best known for their ability to anastomose or attach two pieces of intestinal or bowel tissue together in an end-to-end fashion. In general, staples are known to provide a good degree of hemostasis when applied to tubular tissue such as intestine or bowel. Circular stapling instruments hold a plurality of staples in an annular array of concentric rings within a body of the distal stapling head. A moveable anvil is used to compress or clamp the pieces of intestinal tissue together between the body and the anvil of the stapling head. A firing trigger is operatively coupled to the stapling head and actuation of the trigger ejects the annular array of staples from the body of the stapling head. The ejected staples pierce the clamped tissue and are formed into a ring of "B" shaped staples that securely join the pieces of intestinal tissue together. A circular blade or scalpel of generally cylindrical shape is located within the stapling head and is advanced distally to sever a small ring or "donut" of excess tissue from between the annular array of formed staples. Severing the donut of tissue opens a passageway between the joined pieces of intestinal tissue. The anastomosed tissue is released from the circular instrument by distally advancing the anvil away from the staple holder and drawing the anvil out through the passageway within the annular array of formed staples. Such a device was disclosed by Becht in U.S. Pat. No. 4,207,898 and by Rothfuss in U.S. Pat. No. 4,319,576.

One improvement to the circular stapler that has been well received by surgeons is the inclusion of a breakaway or backup washer within the anvil of the surgical stapler. The breakaway washer is an annular member of semi-rigid material located within the anvil in a location directly opposite to the circular blade. The annular ring has a pair of spaced annular walls joined together at the proximal end by a thin web of material. The thin web of material faces the circular blade and supports tissue as the circular blade is advanced. The advancing circular blade severs the clamped tissue and is slowed by contact with the thin web of the breakaway washer. A cutting edge of the circular blade is substantially parallel to the thin web of the breakaway washer such that the entire cutting edge contacts the thin web of the breakaway washer in a circular ring of contact. Continued application of force partially severs the thin web of material and the remaining thin web material abruptly breaks due to the applied pressure. As the breakaway washer breaks, the load or force required to advance the circular blade drops abruptly. This abrupt force change provides the surgeon with a clear tactile and an audible indication that the instrument has been fired. A circular stapling instrument having a breakaway or backup washer is taught in U.S. Pat. No. 4,289,133, by Rothfuss.

It is important to note that U.S. Pat. No. 4,289,133 discloses a circular blade having an annular cutting edge that is generally parallel to the thin web of the breakaway washer. The parallelism of the cutting edge to the thin web maximizes the contact area of the blade with the thin web and maximizes the input force required to sever the breakaway washer.

Whereas the breakaway washer was indeed a breakthrough device providing the surgeon with an audible and tactile indication that the anastomosis of the tubular organs is complete, the force required to sever or break the breakaway washer amounted to a large portion of the firing force of the instrument. The force required to break the breakaway washer rises to an abrupt peak over a narrow portion of the firing trigger stroke. An alternate embodiment of the circular blade disclosed in U.S. Pat. No. 4,289,133 is a circular blade having an undulating cutting edge. The undulating cutting edges has both peaks and valleys, and the peaks of the cutting edge contact and slices the breakaway washer before the valleys. The undulating cutting edge does not cut the entire thin web simultaneously and this distributes the cutting of the breakaway washer over a larger part of the firing stroke. This reduces the peak cutting forces, and the blade slices rather than penetrates or punches through the thin web.

Whereas the undulating cutting edge does indeed reduce the load or force to break the washer, it is accomplished by spreading the load over a larger portion of the firing stroke. Testing has indicated that an undulating cutting blade gradually slices the breakaway washer and does not provide the tactile and audible feeling that that is preferred by many surgeons.

Thus, an invention that reduces the peak firing force and provides a tactile and audible signal to the surgeon would be more acceptable. Presently, there is no known surgical anastomosis stapling instrument that can provide an improved interaction between the circular blade and the breakaway washer such that the surgeon is provided with both the desired tactile and audible feedback, and a reduction of the force needed to fire the instrument.

SUMMARY OF THE INVENTION

The present invention is a surgical cutting and stapling instrument for applying a plurality of staples to tissue. The surgical stapling instrument includes a handle portion and a firing trigger pivotably connected to the handle portion. A shaft extends from the handle portion and a stapling head is attached to the shaft. The stapling head has a distal face and an array of staple slots and staples located therein. The staples are operably coupled to the firing trigger. An anvil is coupled to the stapling head. The anvil has an array of staple forming pockets therein. The staple forming pockets are facing the distal face of the stapling head and are in alignment with the staple slots in the distal face for forming an array of the staples therebetween;

A breakaway washer is mounted within the anvil of the stapling head. The breakaway washer has a pair of parallel spaced walls and a thin web extending therebetween. The thin web faces the distal face of the stapling head.

A blade is located within the distal face of the stapling head and is operably coupled to the firing trigger. The blade

has a distal cutting edge and at least one wedge spike protruding distally therefrom. The at least one wedge spike has a first and a second edge. The distal cutting edge and the at least one wedge spike face the annular thin web of the breakaway washer.

When the anvil is moved adjacent to the stapling head and the firing trigger is closed, the staples are formed and the blade is moved to sever breakaway washer. When the blade is moved, the at least one wedge spike of the blade penetrates the thin web of the breakaway washer and weakens the thin web by propagating at least one crack therein. The distal cutting edge of the blade severs the thin web having at least one crack therein.

That is, in a surgical procedure, the surgeon first clamps the surgical stapling and cutting instrument on tissue. Next, the surgeon fires the instrument is fired to form the staples in tissue. As the staples are formed, the wedge spikes of the blade penetrates the clamped tissue and the thin web of the breakaway washer. Lastly, the distal cutting edge of the blade severs the tissue and the breakaway washer.

Significantly, the novel blade of the surgical stapling and cutting instrument provides the surgeon with the desired tactile and audible feedback, and reduces the force to fire the instrument by reducing the force needed to sever the breakaway washer. Specifically, the novel blade of the present invention severs the breakaway washer in a novel two step process. First, the wedge spikes of the blade penetrate the thin web of the breakaway washer, and by wedging action, propagate at least one crack in the thin web of the breakaway washer away from the point of penetration. Second, the blade is advanced to contact and sever the weakened cracked thin web of the breakaway washer. Consequently, weakening the breakaway washer with at least one crack reduces the force to fire, and the desired tactile and audible feedback is obtained by severing the remaining uncracked portions of the thin web.

BRIEF DESCRIPTION OF THE DRAWINGS

The novel features of the invention are set forth with particularity in the appended claims. The invention itself, however, both as to organization and methods of operation, together with further objects and advantages thereof, may best be understood by reference to the following description, taken in conjunction with the accompanying drawings in which:

FIG. **1** is an isometric view of a surgical anastomosis stapling instrument;

FIG. **2** is an exploded isometric view of the stapling end effector of the surgical anastomosis stapling instrument of FIG. **1** wherein the end effector has a prior art circular blade;

FIG. **3** is a side elevational view, in cross section, of the assembled stapling end effector of FIG.**2** wherein the stapling head assembly is shown fully inserted into a section of purse string sutured inferior colon tissue and the anvil assembly is fully opened and inserted into a section of purse string sutured superior colon tissue;

FIG. **4** is a side elevational view, in cross section, of FIG. **3** wherein the purse string sutures within the colon tissue are tightened and tied to draw the colon tissue tightly around the anvil shaft;

FIG. **5** is a side elevational view, in cross section, of FIG. **4** wherein the anvil assembly has been closed to a gap D;

FIG. **6** is a side elevational view, in cross section, of FIG. **6** wherein the surgical anastomosis stapling instrument has been fired to staple the colon tissue together and sever the drawn colon tissue;

FIG. **7** is an isometric view of the prior art circular blade of the surgical anastomosis stapling instrument of FIG. **1**.

FIG. **8** is a side elevational view, in cross section, of prior art circular blade having an undulated cutting edge for the surgical anastomosis stapling instrument of FIG. **1**;

FIG. **9** is a side elevational view, taken in cross section along the line **9**—**9** of the prior art circular blade of FIG. **8**;

FIG. **10** is an isometric view of an improved circular blade having a plurality of wedge spikes according to the present invention;

FIG. **11** is a portion of a side elevational view, taken in cross section, of the improved circular blade of FIG. **10** in contact with a breakaway washer;

FIG. **12** is a plan view of the cutting surface of the breakaway washer of FIG. **11** showing the points of penetration and cracks propagating therefrom for the improved circular blade;

FIG. **13** is a graph showing three examples of the prior art circular blade load/displacement curve and three examples of the prior art circular blade load having undulating cutting edge displacement curves; and

FIG. **14** is a side elevational view of FIG. **10**.

DETAILED DESCRIPTION OF THE INVENTION

The present invention is an improved surgical stapling instrument for applying surgical staples to tissue and, more particularly, to a circular surgical stapling instrument having an improved cutting blade. Circular stapling instruments having a circular cutting blade are well known in the art and described in the U.S. Pat. No. 4,319,576 (Rothfus), which is herein incorporated by reference.

Referring now to FIG. **1**, a surgical stapling instrument **25** of the preferred invention has a handle **30** for the surgeon to grasp, a shaft **35** extending distally from the handle **30**, and a distal stapling end effector **37** for the end-to-end anastomosis of cylindrical tissue. A moveable firing trigger **32** is pivotably connected to the handle **30**. Firing trigger **32** is shown in the open position extending from the handle **30** and is moveable to a closed position adjacent to the handle **30**. The shaft **35** is slightly curved for anatomical placement of the stapling end effector **37** into hard to reach lower anatomical positions. The stapling end effector **37** has a fixed stapling head assembly **40** and a movable anvil assembly **60** operably connected to an anvil closure knob **31**. Rotation of the anvil closure knob **31** moves the anvil assembly **60** from the spaced away position shown in FIG. **1** to a position adjacent to the stapling head assembly (FIG. **5**). The anvil assembly **60** is detachably connected to the stapling head assembly **40** and can be easily removed from the surgical stapling instrument **25** in the full open position. A firing trigger **32** is moveable from an open position to a closed position to staple and cut two sections of colon or bowel together within the stapling end effector **37**. A safety latch **33** is shown in the locked position to lock the firing trigger **32** in the open position to prevent accidental firing. These operations will be described in greater detail below.

Referring now to FIG. **2**, the elements that make up the anvil assembly **60** and the stapling head assembly **40** of the stapling end effector **37** are shown in exploded form. The stapling head assembly **40** has a hollow tubular casing **41** that is fixedly attached at the proximal end to the shaft **35** by a swaged ferrule **36**. The casing **41** is funnel shaped and is open at the distal end for the reception of a staple holder **50**. A series of locking holes **41**a are circumferentially located

about the tubular casing **41** to cooperate with a like number of locking pins **53** that extend from the staple holder **50** to fix the staple holder **50** in the casing **41**.

A funnel shaped staple driver **45** is slidably located within the assembled casing **41** and the staple holder **50** and operably connected to the firing trigger **32**. Staple holder **50** has a distal face **51** and an annular array of staple slots **52** (FIG. **3**) extending longitudinally therein. Staple driver **45** has a like number of driver fingers **48** extending that are slidably received in the proximal portion of the staple slots **52**. A staple **55** is received in the distal portion of the staple slots **52** in contact with a distal end of the driver fingers **48**.

The staple driver **45** is generally hollow and fixably receives a circular blade within the open distal end (FIG. **3**). A prior art circular blade **80** is shown and described in FIGS. **2–7**. As best shown in FIG. **7**, the prior art circular blade **80** is a generally a hollow cylinder having a distal cutting edge **81**, and a proximal blade base **84** having a central aperture **83**. The cutting edge **81** of the prior art blade **80** is formed parallel to the blade base **84**. A series of blade mounting holes **82** are equally spaced around the blade base **84** and fit over a like number of blade mounting pins **47** located within the staple driver **45**. The circular blade **80** is attached to the staple driver **45** by swelling or staking the pins **47** (FIGS. **3–6**) with the application of heat or ultrasonic energy (not shown).

Anvil assembly **60** is shown in exploded form in FIG. **2** and removeably mounts to the stapling head assembly **40**. The anvil assembly **60** has a disk shaped anvil **61** rigidly attached to a distal end of an anvil shaft **62**. The anvil **61** has an outer ring **69** with an annular array of staple forming pockets **63** around the periphery of a proximal anvil face **67**. An anvil shroud **64** is attached to the distal face of the anvil **61** to provide an atraumatic tip for the surgical stapling instrument **25**. The anvil shaft **62** has a bore **66** therein and a pair of opposed clip slots **68** extend inwardly to communicate with the bore **66**. A pair of flexible trocar clips **65** fixedly mount within the distal end of the bore **66** and extend outwardly into the clip slots **68**. The clips **65** provide a detent for engaging a trocar **43** extending distally from the head assembly **40** (FIGS. **3** and **4**). The detent operably connects the anvil assembly **60** to the anvil closure knob **31** (FIG. **1**).

A breakaway washer **70** mounts within the outer end of the anvil assembly **60** and is fabricated or formed from a plastic material such as acrylonitrile butadiene styrene (ABS), polyethelene, polypropelene, polystyrene or any other semi-resilient engineering thermoplastic. The breakaway washer **70** is annular in shape and as shown the in cross section of FIG. **11**, has an outer wall **71** and an inner wall **72** with a thin web **73** extending therebetween. The thin web **73** opposedly faces the distal cutting edge **81** of the circular blade **80** and is used as a backup surface for the tissue as it is being cut. The interaction of the breakaway washer **70** with circular blade **80** will be described in further detail below.

FIGS. **3–6** show how the surgical stapling instrument **25** is used to perform a double purse string suturing technique to anastomose two portions of colon tissue. For clarity, the stapling end effector **37** and colon tissue are shown in cross section to better illustrate the movement of the internal elements within the instrument **25** and the interaction of the instrument **25** with colon tissue. The anastomosis is performed with the prior art circular blade **80** so that the reader can understand the prior art and appreciate the improvements offered by the spiked circular blade **90** (FIG. **10**) of the present invention. The spiked circular blade **90** will be described in greater detail later.

Prior to the view shown in FIG. **3**, the sigmoid colon of a patient has been sectioned to excise a portion of cancerous tissue producing a section of superior colon tissue **21** and a section of inferior colon tissue **22**. It is desired to use the surgical stapling instrument **25** to join these tissue portions **20, 21** together in an end to end anastomosis. As shown in FIG. **3**, the stapling head assembly **40** of the surgical stapling instrument **25** has been inserted into the rectum (not shown) and is positioned just inside the severed end of the inferior colon tissue **21**. The dome-like anvil shroud **64** of the anvil assembly **60** facilitates the passage of the stapling end effector **37** through the inferior colon tissue **21** without inducing trauma. The anvil assembly **60** is extended and is shown placed just inside the superior colon tissue **22**. Anvil assembly **60** is removeably attached to the trocar **43** by the trocar clips **65** described previously. The staples **55** are shown positioned within the staple slots **52**.

In FIG. **4**, a purse string suture **26** (FIG. **4**) is placed adjacent to the severed ends of the tissue in both the inferior colon tissue **21** and the superior colon tissue **22**. The ends of the purse string sutures **26** are drawn tight to draw the colon tissue **21, 22** inward about the anvil shaft **62** and the trocar **43**. The purse string sutures **26** are then tied to secure the tissue colon tissue **21, 22** in the position shown.

In FIG. **5**, the anvil assembly **60** has moved from the open position of FIG. **4** to a closed position adjacent to the stapling head assembly **40** by the clockwise rotation of the anvil closure knob **31** (FIG. **1**). As the anvil assembly **60** is closed, the trocar **43** and the anvil shaft **62** are retracted into the central support tube **42** of the stapling head assembly **40** and through the tied ends of the inferior colon tissue **21** and the superior colon tissue **22**. Colon tissue **21, 22** is clamped between the stapling head **40** and the anvil assembly **60**. The operator continues to close the anvil assembly **60** until a desired gap "D" between the anvil assembly **60** and the staple holder **50** of the stapling head assembly **40** is obtained. The gap "D" sets the height or amount of closure that the staples **55** will undergo when fired. Once the desired gap "D" is reached, the surgical stapling instrument **25** is ready to fire.

In FIG. **6**, the surgical stapling instrument **25** of FIG. **5** has been fired. This is accomplished by pivoting the safety latch **33** (FIG. **1**) downward (not shown) to unlock the firing trigger **32** and firing the surgical stapling instrument **25** by moving the firing trigger **32** from a first open position (FIG. **1**) to a second closed position (not shown) adjacent to the handle **30**. Firing the surgical stapling instrument **25** moves the staple driver **45** distally and the driver fingers **48** of the staple driver **45** eject the unformed staples **55** from the staple slots **52**. The ejected staples **55** are driven into the inferior colon tissue **21**, the superior colon tissue **22**, and into the staple forming pockets **63**. This action forms the unformed staples **55** into the B-shaped configuration known as a formed staple **56** to join the inferior colon section **21** to the superior colon section **22**.

As the staple driver **45** is advanced to form the staples **55**, the attached prior art circular blade **80** (see FIG. **7**) moves distally to sever the colon tissue **21, 22** against the breakaway washer **70** and produces a portion of severed tissue **22** held within the blade **80**. As the staple driver **45** continues to advance to complete the firing stroke, the entire annular cutting edge **81** of the prior art circular blade **80** simultaneously contacts the annular thin web **73** of the breakaway washer **70** (FIG. **6**). As the cutting edge **81** continues to advance, the load or force to fire rises to a maximum until the cutting edge **81** simultaneously severs or punches through the entire thin web **73** of the breakaway washer **70**.

The severing of the thin web **73** of the breakaway washer results in an abrupt drop in the force to fire and provides both a tactile and an audible feedback that is appreciated by many surgeons as it indicates that the firing of the instrument is complete.

In FIG. **13**, two sets of load versus displacement curves are shown in a graph format. The curves were generated upon a load/displacement measurement device (not shown) such as the Instron model number 4204 made by Instron of Canton, Mass. All tests were performed using a standard breakaway washer **70** fixed to the base of the Instron with a circular blade attached to the moveable crosshead of the Instron. The moveable crosshead was configured to run at a speed of 40 inches per minute and to travel a total distance of 0.10 inches to sever the web **73** of the breakaway washer **70** with the circular blade. Three tests were run using the prior art circular blade **80** of FIG. **7** against the standard breakaway washer **70** and the results were recorded as a number of prior art load/displacement curves **97** of FIG. **13**. The x-axis of the graph of FIG. **13** represents the displacement of the circular blade and the y-axis represents the load (LBF or pound-force) applied to the circular blade. Testing has shown that the force or load required to penetrate the breakaway washer **70** with the prior art blade **80** is a large portion of the firing force.

Three additional tests were run using a prior art undulating circular blade **85** of FIGS. **8** and **9** against the standard breakaway washer **70** and these results were likewise recorded as the improved circular blade load/displacement curves **98** (FIG. **13**). The undulating circular blade **85** is similar to the blade taught in U.S. Pat. No. 4,289,133 by Robert Rothfus, which is included herein by reference, but has a fewer number of peaks **86** and valleys **87** than Rothfus. As anticipated by Rothfus, the undulating circular blade **85** did indeed reduce the peak force to sever the thin web **80** and this is shown in a number of undulating blade load/displacement curves **86** in FIG. **13**.

When the prior art circular blade **80** load/displacement curves **97** are compared to the undulating circular blade **85** load/displacement curves **98**, the circular blade load/displacement curves **98** show that the maximum peak load is reduced from approximately 112 LBF to approximately 49 LBF. This reduction in peak loading is accomplished by spreading the load out over more of the blade travel or blade displacement, e.g. firing trigger **32** closure and by slicing the thin web **73** of the breakaway washer **70** rather than severing or punching it. It is important to note, however, that although the undulating circular blade **85** has a significant reduction in force to fire, the surgeon loses the audible and tactile feedback provided by the circular blade **80**.

In FIG. **10**, the spiked circular blade **90** of the preferred invention is shown. The spiked circular blade **90** has a plurality of wedge spikes **91** extending distally from the distal cutting edge **81**. The wedge spikes **91** have a first edge **92** and a second edge **93**. The spiked circular blade **90** is a generally a hollow cylinder having a proximal blade base **84**, a central aperture **83** and a series of blade mounting holes **82** equally spaced around the blade base **84**. The cutting edge **81** of the spiked circular blade **90** is formed parallel to the blade base **84** in the manner of the prior art blade **80**. The spiked circular blade **90** is designed to mount within and attaches to the staple driver **45** in the manner of the prior art circular blade **80** described above. FIG. **14** further defines the spiked blade **90** of the present invention. As shown, the spiked circular blade **90** has a number of wedge spikes **91** equally spaced at a pitch or spacing "P" about the cutting edge **81**. A wedge angle θ exists between the first edge **92** and the second edge **93** of the wedge spike **91**. Preferably, angle θ ranges between about 5 degrees and about 120 degrees, and most preferably angle θ is about 15 degrees. The height of the wedge spike **91** from the cutting edge **81** is a dimension "H" that preferably ranges between about 0.020 inches to about 0.25 inches, and most preferably, is about 0.050 inches. Care must be taken to use appropriate values of "P", "θ", and "H" so that the cracks propagated by the wedge spikes **91** do not totally sever the thin web **73** of the breakaway washer **70**. The advantages of the spiked circular blade **90** will now be described.

Unlike the prior art blades **80** and **85**, the spiked blade **90** according to the present invention severs the breakaway washer **70** in a two step process. The first step is to partially weaken the thin web **73** of the breakaway washer **70** with the wedge spikes **91** of the spiked circular blade **90**. The second step is the severing of the partially weakened breakaway washer **70** with the cutting edge **81** in the manner of the prior art blade **80** described above. This two step cutting action both reduces the force or load needed to sever the breakaway washer **70** and provides the tactile and audible feedback that is appreciated by many surgeons.

FIGS. **11** and **12** illustrate the results of the first step of partially weakening the breakaway washer **70**. In FIG. **12**, a front plan view of the breakaway washer **70** is shown and the spiked circular blade **90** has been removed for clarity. In these figures, the wedge spikes **91** have penetrated the thin web **73** of the breakaway washer **70** at a point of penetration **75**. The wedge spikes **91** use wedging action to induce a large stress within the thin web **73** of the breakaway washer, that is concentrated at the point of penetration **75**. The localized stress cracks the thin web **73** adjacent to the wedge spikes **91** and a crack **76** propagates away from the point of penetration **73** along the curve of the thin web **73**. These cracks **76** weaken the thin web **73** of the breakaway washer **70** without severing it and arrowheads are provided to indicate the direction of crack propagation away from the points of penetration **75**.

As the spiked circular blade **90** continues to advance distally from the position of FIG. **11**, the blade edge **81** contacts and severs the weakened thin web **73** of the breakaway washer in the manner described above for the prior art blade **80** (not shown). Pre-cracking the breakaway washer **70** provides less material for the cutting edge **81** to sever and the load or force required to sever the cracked thin web **73** of the breakaway washer **70** is reduced by an amount equivalent to the percentage of thin web **73** breakage. Additionally, once a crack is started in a material, the high stress concentrations present at the tip of a crack **76** require less of a load input to propagate the crack farther when subjected to an additional moderate load. The application of the second step of applying the severing load or force to the thin web **73** can induce additional crack propagation resulting in an additional reduction in the force to shear the breakaway washer **70**. Thus, the spiked circular blade **90** provides the surgeon with the desired audible and tactile indicators along with a reduced peak force.

While preferred embodiments of the present invention have been shown and described herein, it will be obvious to those skilled in the art that such embodiments are provided by way of example only. Numerous variations, changes, and substitutions will now occur to those skilled in the art without departing from the invention. Accordingly, it is intended that the invention be limited only by the spirit and scope of the appended claims.

What is claimed is:

1. A surgical cutting and stapling and instrument for applying a plurality of staples to tissue, said surgical stapling instrument comprising:

a handle portion;

a firing trigger pivotably connected to said handle portion;

a shaft extending from said handle portion;

a stapling head attached to said shaft and having a distal face, said distal face having an array of staple slots and staples therein, said staples operably coupled to said firing trigger;

an anvil coupled to said stapling head, said anvil having an array of staple forming pockets therein, said staple forming pockets facing said distal face of said stapling head and in alignment with said staple slots in said distal face for forming said staples therebetween;

a breakaway washer mounted within said anvil of said stapling head, said breakaway washer having a pair of parallel spaced walls and a thin web extending therebetween, said thin web facing said distal face of said stapling head;

a blade located within said distal face of said stapling head and operably coupled to said firing trigger, said blade having a distal cutting edge and at least one wedge spike protruding distally therefrom, said at least one wedge spike having a first and a second edge, said distal cutting edge and said at least one wedge spike facing said annular thin web of said breakaway washer; and

wherein when said anvil is moved adjacent to said stapling head and said firing trigger is closed, said staples are formed and said blade is moved to sever said breakaway washer, and when said blade is moved, said at least one wedge spike of said blade penetrates said thin web of said breakaway washer and weakens said thin web by propagating at least one crack therein, and said distal cutting edge of said blade severs said thin web having at least one crack therein.

2. The instrument of claim **1** wherein said at least one wedge spike has an angle between said first and said second wedge edges between about 5 degrees and about 120 degrees.

3. The instrument of claim **2** wherein said angle between said first and said second wedge edges is preferably about 15 degrees.

4. The instrument of claim **1** wherein said blade is circular.

5. The instrument of claim **1** wherein a distal height of the wedge spike from said cutting edge preferably ranges between about 0.020 inches to about 0.25 inches.

6. The instrument of claim **5** wherein said distal height of said wedge spike from said cutting edge is about 0.050 inches.

7. The instrument of claim **5** wherein said at least one wedge spike has an angle between said first and said second edge between about 5 degrees and about 120 degrees.

8. The instrument of claim **7** wherein said angle between said first and said second edge of said wedge spike is preferably about 15 degrees.

9. A method for stapling and cutting tissue comprising the steps of:

a) providing a stapling and cutting instrument having:

i) a handle portion;

ii) a firing trigger pivotably connected to said handle portion;

iii) a shaft extending distally from said handle portion;

iv) a stapling head attached to said shaft and having a distal face, said distal face having an array of staple slots and staples therein, said staples operably coupled to said firing trigger;

v) an anvil coupled to said stapling head, said anvil having an array of staple forming pockets therein, said staple forming pockets facing said distal face of said stapling head and in alignment with said staple slots in said distal face for forming said staples therebetween;

vi) a breakaway washer mounted within said anvil of said stapling head, said breakaway washer having a pair of parallel spaced walls and a thin web extending therebetween, said thin web facing said distal face of said stapling head;

vii) a blade located within said distal face of said stapling head and operably coupled to said firing trigger, said blade having a distal cutting edge and at least one wedge spike protruding distally therefrom, said at least one wedge spike having a first and a second edge, said distal cutting edge and said at least one wedge spike facing said annular thin web of said breakaway washer;

b) clamping tissue between said anvil assembly and said head assembly;

c) forming said array of staples against said staple forming pockets;

d) penetrating the tissue and said thin web of said breakaway washer with said at least one wedge spike to propagate at least one crack within said thin web; and

e) severing said tissue and said thin web of said breakaway washer having at least one crack therein with said distal cutting edge.

* * * * *

ANNEX B: Estudi estadístic.

B. Estudi estadístic.

Les trenta sis qüestions que conformen el cos de l'enquesta (repetim que les set darreres s'han respòs per cadascuna de les quatre alternatives) són les següents:

Situació actual:

1. Indiqui la puntuació que rep el sistema d'anastomosi amb sutura per grapes tenint en compte la restricció d'accés en casos de càncer colorectal.

   Molt baixa Baixa Acceptable Bona Molt bona

2. Indiqui la puntuació que rep la rapidesa en realitzar aquesta intervenció quan s'utilitza el sistema de sutura per grapes.

   Molt baixa Baixa Acceptable Bona Molt bona

3. Valori el factor ergonòmic del sistema de sutura per grapes.

   Molt baix Baix Acceptable Bo Molt bo

4. Indiqui la puntuació que rep la qualitat de la unió realitzada pel sistema d'anastomosi colorectal de sutura per grapes.

   Molt baixa Baixa Acceptable Bona Molt bona

5. Indiqui la puntuació que rep la capacitat de cicatrització natural que queda a la part del còlon afectada per l'anastomosi amb sutura per grapes.

   Molt baixa Baixa Acceptable Bona Molt bona

6. Indiqui l'index de morbilitat que associaria a l'ús de la sutura per grapes en l'anastomosi colorectal.

   0-5 % 5-15 % 15-30 % mé del 30 %

7. Creu necessari millorar el sistema actual de sutura per grapes?.

   SI. NO.

8. Valori la capacitat dels polímers utilitzats en la sutura interna per mantenir la unió el temps necessari per assegurar la correcta cicatrització en aquests casos.

Molt baixa Baixa Acceptable Bona Molt bona

Alternativa 1:

9. Indiqui la puntuació que rep la facilitat d'ús d'aquesta alternativa.

Molt baixa Baixa Acceptable Bona Molt bona

10. Valori el factor ergonòmic d'aquesta alternativa.

Molt baix Baix Acceptable Bo Molt bo

11. Valori la gravetat de les possibles complicacions post-operatòries derviades de l'ús d'aquesta alternativa (de molt greus a problemes sense importància mèdica).

Molt greus Greus Risc acceptable Lleugers problemes Sense importància

12. Valori l'index de morbilitat assossiada a l'ús d'aquesta alternativa en tant per cent de casos.

0-5 % 5-15 % 15-30 % mé del 30 %

13. Indiqui la qualitat de la cicatrització del teixit del còlon amb aquesta alternativa.

Molt baixa Baixa Acceptable Bona Molt bona

14. Creu que milloraria el resultat de la intervenció si es substituís el sistema actual de sutura per grapes pel mecanisme representat en aquesta alternetiva?.

SI. NO.

15. Seria el preu unitari del mecanisme en aquesta alternativa un factor a tenir en compte a l'hora de decidir la seva utilització?.

SI. NO.

Alternativa 2:

16. Indiqui la puntuació que rep la facilitat d'ús d'aquesta alternativa.

Molt baixa Baixa Acceptable Bona Molt bona

17. Valori el factor ergonòmic d'aquesta alternativa.

Molt baix Baix Acceptable Bo Molt bo

18. Valori la gravetat de les possibles complicacions post-operatòries derviades de l'ús d'aquesta alternativa (de molt greus a problemes sense importància mèdica).

Molt greus Greus Risc acceptable Lleugers problemes Sense importància

19. Valori l'índex de morbilitat assossiada a l'ús d'aquesta alternativa en tant per cent de casos.

0-5 % 5-15 % 15-30 % mé del 30 %

20. Indiqui la qualitat de la cicatrització del teixit del còlon amb aquesta alternativa.

Molt baixa Baixa Acceptable Bona Molt bona

21. Creu que milloraria el resultat de la intervenció si es substituís el sistema actual de sutura per grapes pel mecanisme representat en aquesta alternetiva?.

SI. NO.

22. Seria el preu unitari del mecanisme en aquesta alternativa un factor a tenir en compte a l'hora de decidir la seva utilització?.

SI. NO.

Alternativa 3:

23. Indiqui la puntuació que rep la facilitat d'ús d'aquesta alternativa.

Molt baixa Baixa Acceptable Bona Molt bona

24. Valori el factor ergonòmic d'aquesta alternativa.

Molt baix Baix Acceptable Bo Molt bo

25. Valori la gravetat de les possibles complicacions post-operatòries derviades de l'ús d'aquesta alternativa (de molt greus a problemes sense importància mèdica).

Molt greus Greus Risc acceptable Lleugers problemes Sense importància

26. Valori l'índex de morbilitat assossiada a l'ús d'aquesta alternativa en tant per cent de casos.

0-5 % 5-15 % 15-30 % mé del 30 %

27. Indiqui la qualitat de la cicatrització del teixit del còlon amb aquesta alternativa.

Molt baixa Baixa Acceptable Bona Molt bona

28. Creu que milloraria el resultat de la intervenció si es substituís el sistema actual de sutura per grapes pel mecanisme representat en aquesta alternetiva?.

SI. NO.

29. Seria el preu unitari del mecanisme en aquesta alternativa un factor a tenir en compte a l'hora de decidir la seva utilització?.

SI. NO.

Alternativa 4:

30. Indiqui la puntuació que rep la facilitat d'ús d'aquesta alternativa.

Molt baixa Baixa Acceptable Bona Molt bona

31. Valori el factor ergonòmic d'aquesta alternativa.

Molt baix Baix Acceptable Bo Molt bo

32. Valori la gravetat de les possibles complicacions post-operatòries derviades de l'ús d'aquesta alternativa (de molt greus a problemes sense importància mèdica).

Molt greus Greus Risc acceptable Lleugers problemes Sense importància

33. Valori l'índex de morbilitat assossiada a l'ús d'aquesta alternativa en tant per cent de casos.

0-5 % 5-15 % 15-30 % mé del 30 %

34. Indiqui la qualitat de la cicatrització del teixit del còlon amb aquesta alternativa.

Molt baixa Baixa Acceptable Bona Molt bona

35. Creu que milloraria el resultat de la intervenció si es substituís el sistema actual de sutura per grapes pel mecanisme representat en aquesta alternetiva?.

SI. NO.

36. Seria el preu unitari del mecanisme en aquesta alternativa un factor a tenir en compte a l'hora de decidir la seva utilització?.

SI. NO.

A continuació s'implementen els resultats d'aquesta enquesta qüestió a qüestió. La seva interpretació s'inclou al cos de la memòria d'aquest projecte, a l'apartat *7.3* i de títol: *Coclusions extretes de l'estudi estadístic*.

Situació actual:

Questió 1:

Indiqui la puntuació que rep el sistema d'anastomosi amb sutura per grapes tenint en compte la restricció d'accés en casos de càncer colorectal.

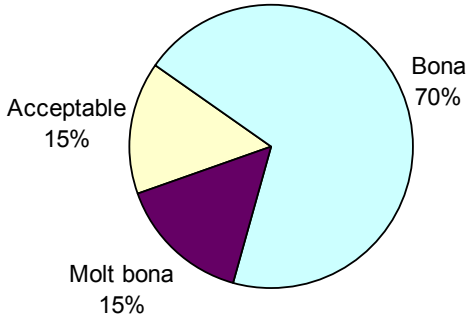

Qüestió 2:

Indiqui la puntuació que rep la rapidesa en realitzar aquesta intervenció quan s'utilitza el sistema de sutura per grapes.

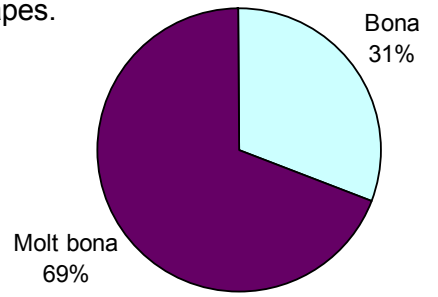

Qüestió 3:

Valori el factor ergonòmic del sistema de sutura per grapes.

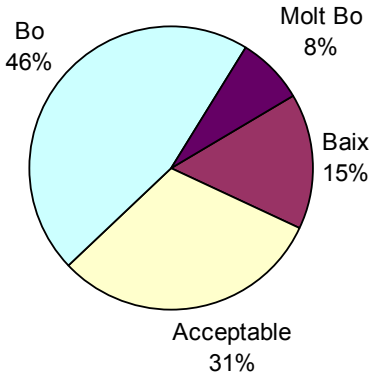

Qüestió 4:

Indiqui la puntuació que rep la qualitat de la unió realitzada pel sistema d'anastomosi colorectal de sutura per grapes.

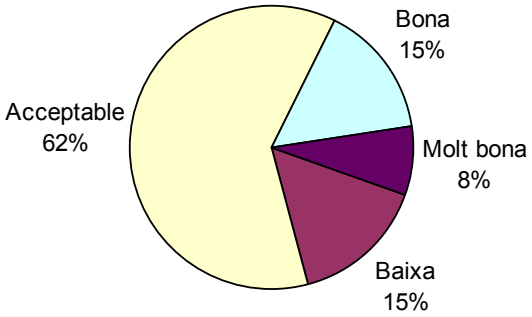

Qüestió 5:

Indiqui la puntuació que rep la capacitat de cicatrització natural que queda a la part del còlon afectada per l'anastomosi amb sutura per grapes.

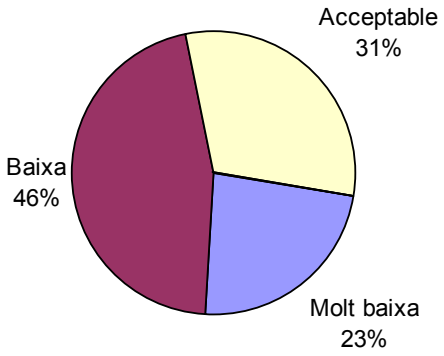

Qüestió 6:

Indiqui l'index de morbilitat que associaria a l'ús de la sutura per grapes en l'anastomosi colorectal.

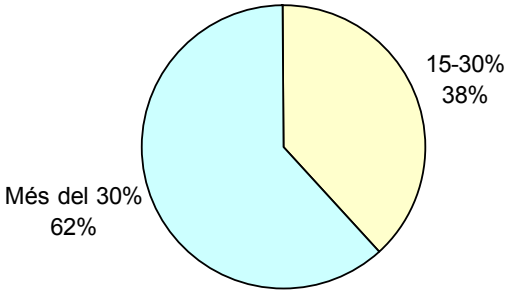

Qüestió 7:

Creu necessari millorar el sistema actual de sutura per grapes?.

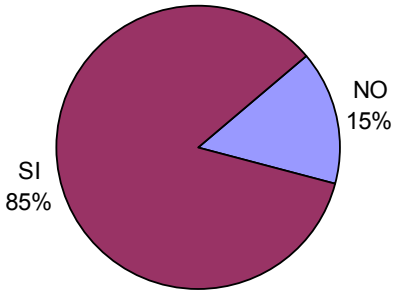

Qüestió 8:

Valori la capacitat dels polímers utilitzats en la sutura interna per mantenir la unió el temps necessari per assegurar la correcta cicatrització en aquests casos.

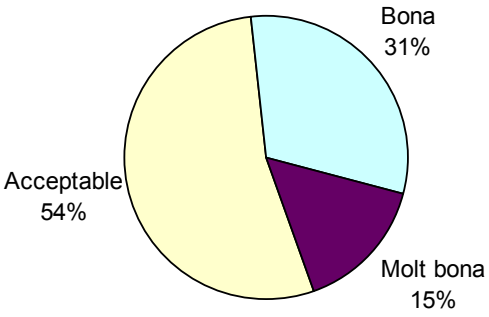

<u>Alternativa 1:</u>

Qüestió 9:

Indiqui la puntuació que rep la facilitat d'ús d'aquesta alternativa.

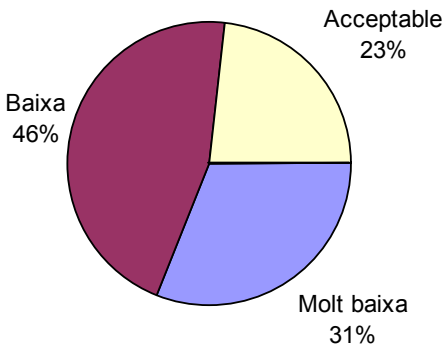

Qüestió 10:

Valori el factor ergonòmic d'aquesta alternativa.

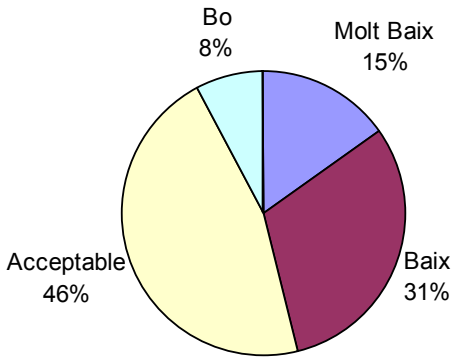

Qüestió 11:

Valori la gravetat de les possibles complicacions post-operatòries derviades de l'ús d'aquesta alternativa.

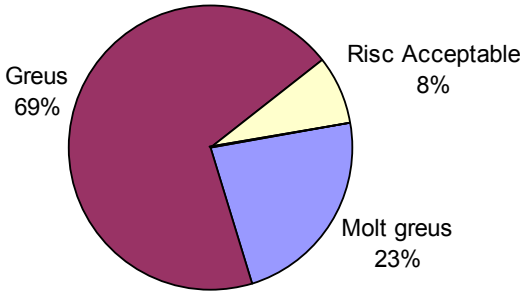

Qüestió 12:

Valori l'índex de morbilitat assossiada a l'ús d'aquesta alternativa en tant per cent de casos.

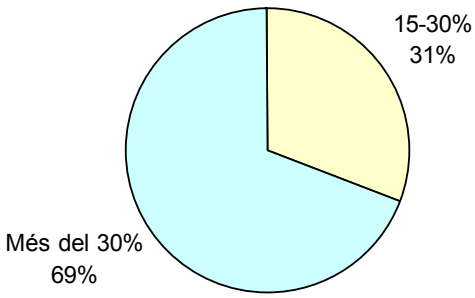

Qüestió 13:

Indiqui la qualitat de la cicatrització del teixit del còlon amb aquesta alternativa.

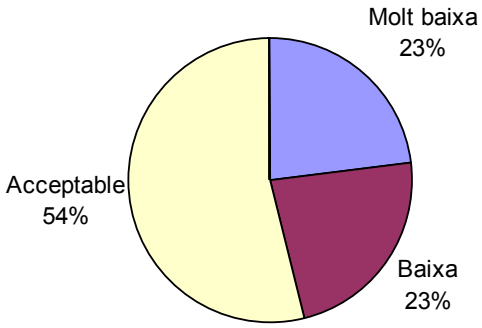

Qüestió 14:

Creu que milloraria el resultat de la intervenció si es substituís el sistema actual de sutura per grapes pel mecanisme representat en aquesta alternetiva?.

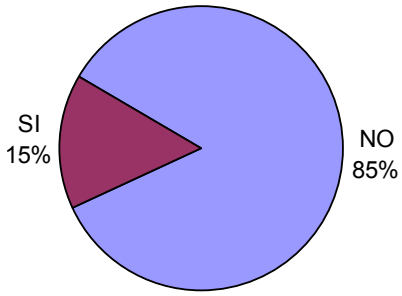

Qüestió 15:

Seria el preu unitari del mecanisme en aquesta alternativa un factor a tenir en compte a l'hora de decidir la seva utilització?.

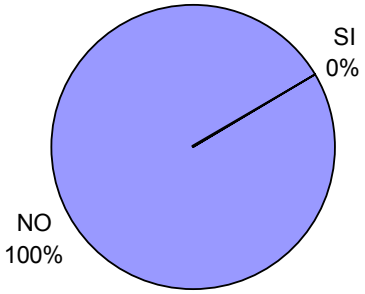

Alternativa 2:

Qüestió 16:

Indiqui la puntuació que rep la facilitat d'ús d'aquesta alternativa.

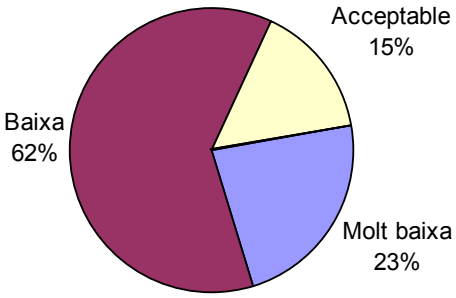

Qüestió 17:

Valori el factor ergonòmic d'aquesta alternativa.

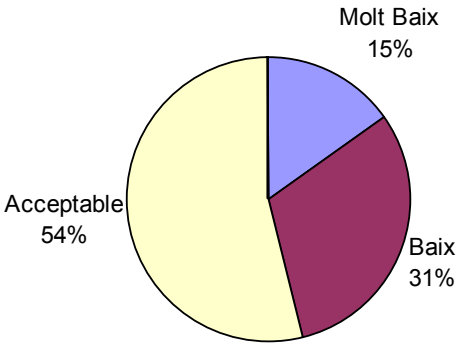

Qüestió 18:

Valori la gravetat de les possibles complicacions post-operatòries derviades de l'ús d'aquesta alternativa.

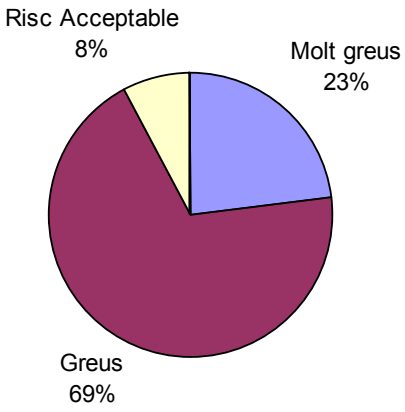

Qüestió 19:

Valori l'índex de morbilitat assossiada a l'ús d'aquesta alternativa en tant per cent de casos.

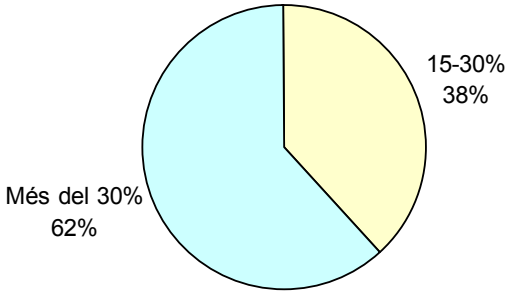

Qüestió 20:

Indiqui la qualitat de la cicatrització del teixit del còlon amb aquesta alternativa.

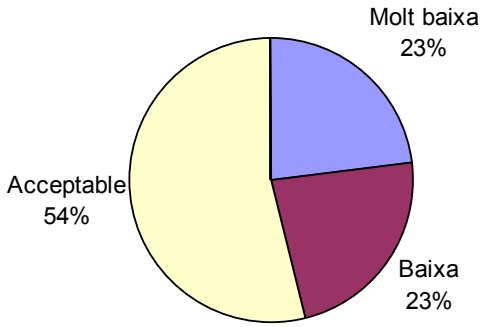

Qüestió 21:

Creu que milloraria el resultat de la intervenció si es substituís el sistema actual de sutura per grapes pel mecanisme representat en aquesta alternetiva?.

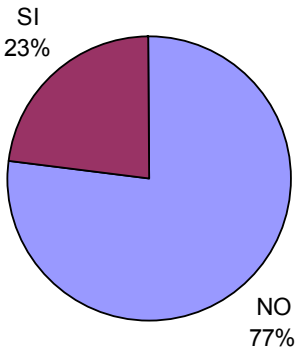

Qüestió 22:

Seria el preu unitari del mecanisme en aquesta alternativa un factor a tenir en compte a l'hora de decidir la seva utilització?.

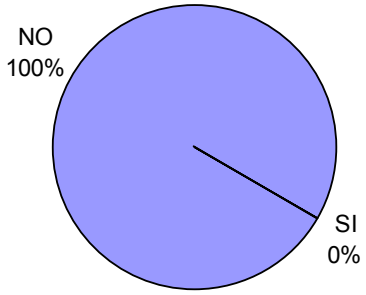

Alternativa 3:

Qüestió 23:

Indiqui la puntuació que rep la facilitat d'ús d'aquesta alternativa.

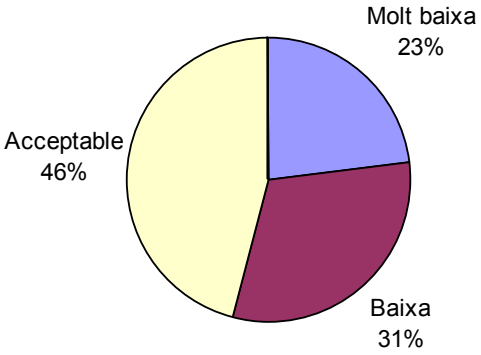

Qüestió 24:

Valori el factor ergonòmic d'aquesta alternativa.

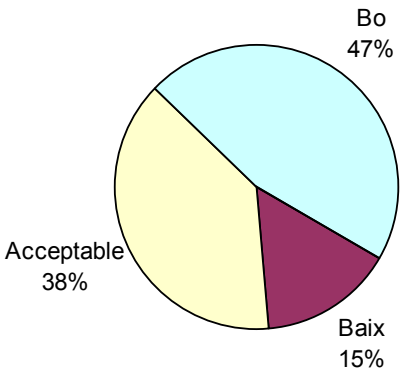

Qüestió 25:

Valori la gravetat de les possibles complicacions post-operatòries derviades de l'ús d'aquesta alternativa.

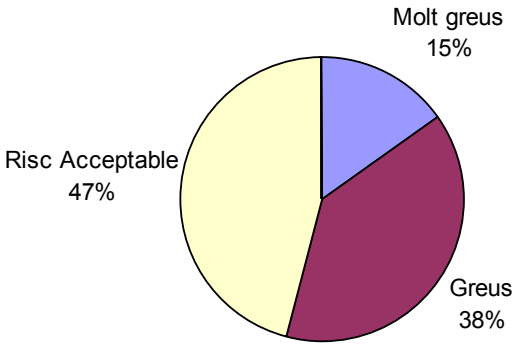

Qüestió 26:

Valori l'índex de morbilitat assossiada a l'ús d'aquesta alternativa en tant per cent de casos.

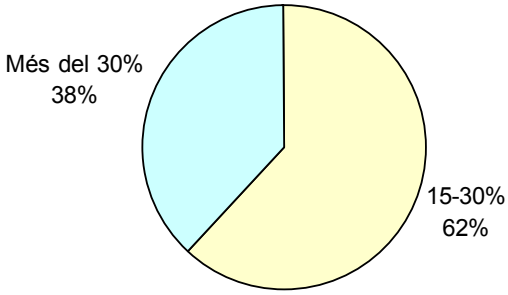

Qüestió 27:

Indiqui la qualitat de la cicatrització del teixit del còlon amb aquesta alternativa.

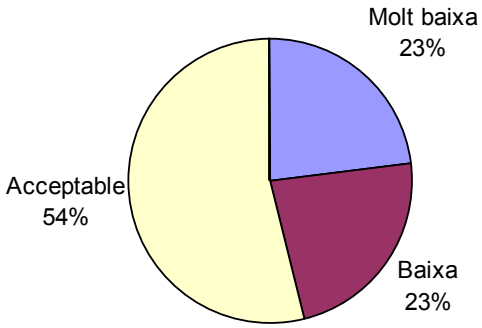

Qüestió 28:

Creu que milloraria el resultat de la intervenció si es substituís el sistema actual de sutura per grapes pel mecanisme representat en aquesta alternetiva?.

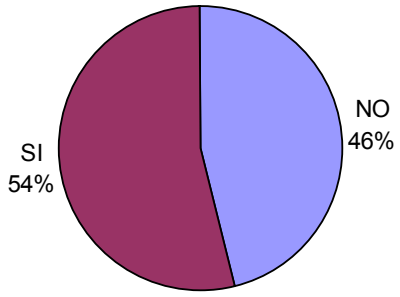

Qüestió 29:

Seria el preu unitari del mecanisme en aquesta alternativa un factor a tenir en compte a l'hora de decidir la seva utilització?.

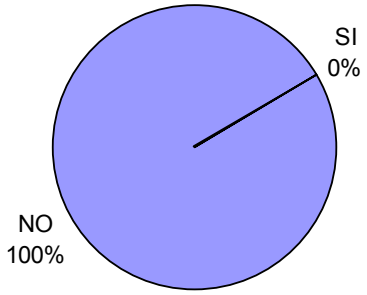

<u>Alternativa 4:</u>

Qüestió 30:

Indiqui la puntuació que rep la facilitat d'ús d'aquesta alternativa.

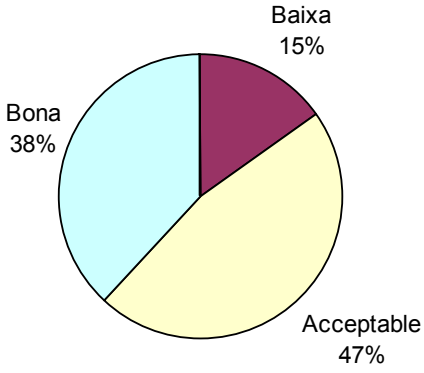

Qüestió 31:

Valori el factor ergonòmic d'aquesta alternativa.

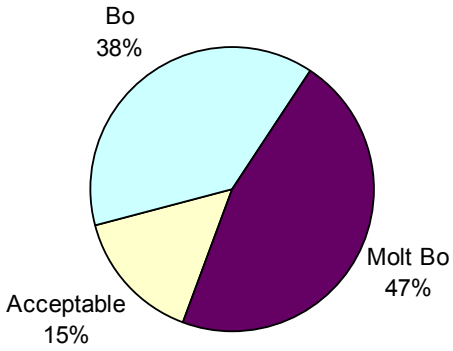

Qüestió 32:

Valori la gravetat de les possibles complicacions post-operatòries derviades de l'ús d'aquesta alternativa.

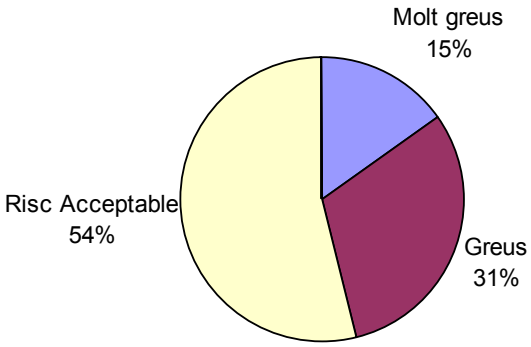

Qüestió 33:

Valori l'índex de morbilitat assossiada a l'ús d'aquesta alternativa en tant per cent de casos.

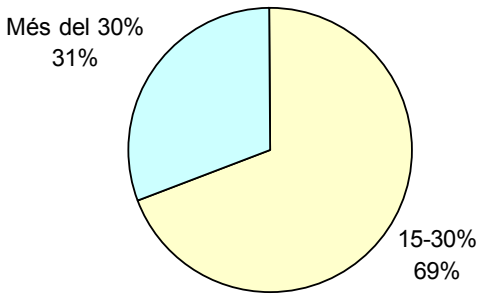

Qüestió 34:

Indiqui la qualitat de la cicatrització del teixit del còlon amb aquesta alternativa.

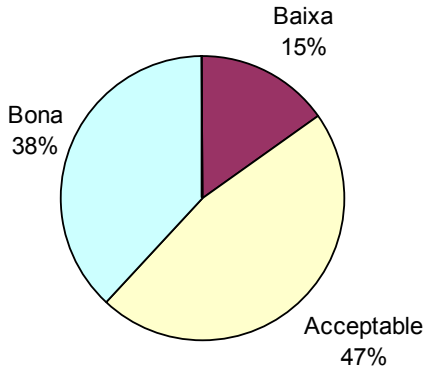

Qüestió 35:

Creu que milloraria el resultat de la intervenció si es substituís el sistema actual de sutura per grapes pel mecanisme representat en aquesta alternetiva?.

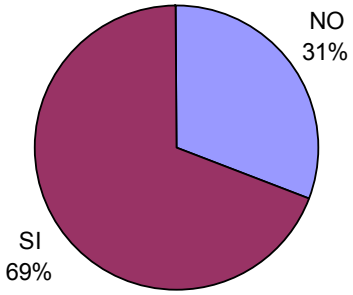

Qüestió 36:

Seria el preu unitari del mecanisme en aquesta alternativa un factor a tenir en compte a l'hora de decidir la seva utilització?.

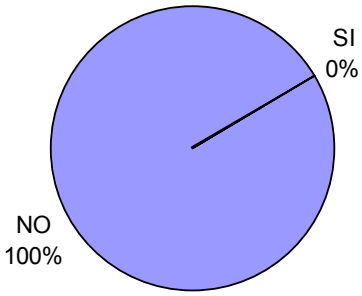

ANNEX C: Plànols.

C. Plànols.

C.1 Índex de plànols.

1. Plànol de conjunt.
2. Explosionat del subconjunt Capçal.
3. Capçal Inferior.
4. Empentador.
5. Xassís del Tap.
6. Guillotina.
7. Pinça d'anclatge.
8. Tap del Xassís del Tap.
9. Explosionat del subconjunt Tronc.
10. Pivot d'anclatge.
11. Tub.
12. Espina.
13. Guia.
14. Platina Tractora Flexible.
15. Espiral de Fixació Inferior.
16. Espiral de Fixació Superior.
17. Topall Nansa.
18. Explosionat del subconjunt Mànec.
19. Carcassa Lateral Dreta.
20. Carcassa Lateral Esquerra.

21. Carcassa Nansa.

22. Xassís Nansa.

23. Pom Inferior.

24. Fiador.

25. Eix Fiador.

26. Eix Nansa.

27. Eix Roscat.

28. Molla Nansa.

29. Anell Polimèric.