3. VENTILATION INSTALLATION

3.1. Introduction

The objective of this project is the study of the necessary characteristics to design a suitable ventilation system to maintain health conditions and indoor air quality suitable for adequate ventilation of the building.

As we have seen in the part of the air conditioning installation, ventilation was solved for the rehearsal rooms and control room access and show hall. The ventilation has been used to provide ventilation, the other types of rooms of our building, including toilets, storage rooms and car park.

3.2. Relationship of rules and regulations

- CTE-DB-HS-3 (Código Técnico de la Edificación – Documento Básico Salubridad 3: Calidad del aire interior).
- RITE. Reglamento de Instalaciones Térmicas en los Edificios. Modificación aprobada por Real Decreto 1027/2007, de 20 de julio.
- UNE related regulations.

3.3. Characterization and quantification of the requirements

First of all we have to find out the minimum flow ventilation depending on the type of room. The following table shows these flows.

		Minimum ventilation flow *qv* in l/s		
ROOM	Bathroom	15 per room	15 per bath	
	Storage room	0.7 per m^2	Storeroom 1	Storeroom 2
			7.60	3.90
	Car park	120 per pk. spot	8 X 120 = 960	

Table 3.1. Minimum ventilation flows.

3.4. Description of the installation

The ventilation of the building will have the intake openings, extraction openings and ducts, necessary to take air from the outside, and the corresponding fans.

For ventilation of storage rooms and parking spots natural ventilation has been chosen, as the regulations permit, it depending on the characteristics of our building.

The ventilation of the bathrooms will be done through a system of hybrid ventilation. The air will circulate from the outside to the wet rooms. This type of ventilation allows air extraction to occur as natural ventilation when the pressure conditions are favourable. When they are not favourable, they will occur as mechanical ventilation.

Hybrid ventilation shall consist basically of:

- Intake openings
- Extraction openings
- Extraction ducts
- Ventilation towers

3.4.1. Storage room

As we have stated before the storage rooms use natural ventilation, as the CTE allows, due to the characteristics of the storage rooms.

They shall be ventilated through a common area, in our case the car park, and have two intake openings, separated 1.5 m vertically at least.

	Area	***Qv***	**Intake Opening**	**Extraction Opening**
	m^2	0.7 l/s per m^2	4 X *qv* in cm^2	
Storeroom 1	10.85	7.6	30.4	
Storeroom 2	5.55	3.9	14.8	

Table 3.2. Area of effective ventilation openings on the storerooms.

The intake openings and the extraction openings of the two storage rooms will be covered by a Euroclima grid of the E-RC type, of 100x100 mm, that gives us an effective area of 60 cm^2, according to the manufacturer.

Model	E-RC	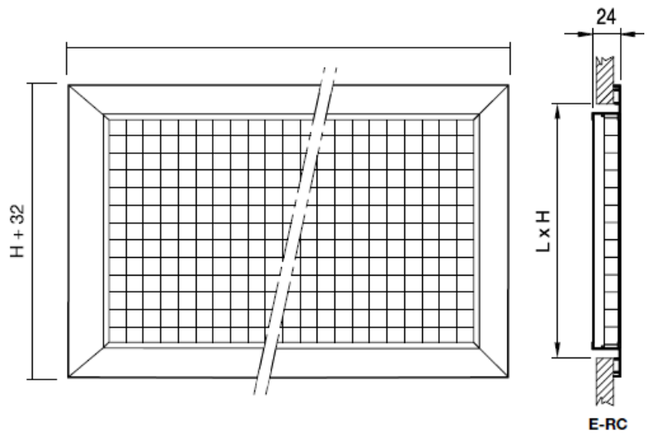
Manufacturer	Euroclima	
Articulated fin aluminium grid of 15x15 mm, made of aluminium sheets		
Fixing	Screws with framework E-MM	
Finishing	Anodized Aluminium	

Table 3.3 Features of the E-RC grid.

3.4.2. Car park

In the parking area natural ventilation has also been used.

The parking area has mixed openings in opposite areas of the frontage in such a way that its distribution is uniform. In addition the distance between any point in the car park and the nearest opening is less than 25 meters.

In this case, the mixed openings are the windows that there is in the east and west frontages. These provide sufficient area of ventilation to keep the parking correctly ventilated.

3.4.3. Intake openings

Intake openings allow us introduce outside air in the building.

In this case, intake openings and air vents of natural pass type have been used, that is to say, that the air enters naturally by idle of the windows and the doors.

3.4.4. Extraction openings

The extraction openings are located in the toilets on the first, second and third floors, and in the toilet of the show hall.

	Qv	**Extraction opening**
	15 l/s per local	4 X *qv* in cm^2
Toilet	15	60

Table 3.4. Effective area of ventilation openings on the toilets.

Grids will be installed for air extraction in all the toilets. They will be placed at a minimum height of 1.8 meters above the floor and at a minimum distance of 10 cm from any corner. In this project they have been placed in the false ceiling holed to the corresponding ventilation shunts.

The following grills have been used as the extraction openings of the toilets.

Model	REHIA 15-75	
Manufacturer	Alder Venticontrol	

Extraction Grill hygroregulated, PS white plastic with gate of regulation coupled with a relative humidity sensor consisting of nylon braids	
Air Flow	Variable from 15 to 75 m^3/h between 35% and 65% relative humidity
Fixing	Screwed to the ceiling and sealed with silicone mastic
Dimensions	260X160x30 mm

Table 3.5. Features of the REHIA15-75 grid.

3.4.5. Extraction ducts

Shunt type extraction ducts has been provided in the bathrooms of the first, second and third floors.

These extraction ducts have a fan located in the top floor. The ducts of the three floors will be individual, as in the last two floors they must be according to the regulations. Ducts are entirely vertical, with a uniform section, do not have obstacles on the path and are completely sealed.

According to the CTE we need a T-3 pull class due to the number of plants and the thermal zone in the same building (Area Z for Barcelona to ≤ 800m altitude).

Taking into account the pull class necessary and the air flow, we obtain that the collective extraction duct will be of 625 cm^2 at least.

This represents the collective duct that starts in the bathrooms on the first floor will be 625 cm^2 at least, and the stubs, the lines start in the toilets of the second and third floors, will be 313 cm^2 at least.

The toilet on the ground floor, in the show hall, will have a single duct that will be 625 cm^2 at least.

The dimensioned shunt ventilation system meets these minimum parameters.

Figure 3.1. Parts of the shunt hybrid ventilation chosen.

3.4.6. Extraction turrets

The extraction turrets employed for the hybrid ventilation will be located on the top floor in an accessible place for maintenance. They are placed in the mouths of expulsion of the ventilation shunts, leaving a minimum free space of 120 mm between the terminal part of the ducts and the support base of the turret.

The turrets REHIA T were used. These turrets, thanks to its design, generate minimum losses when operating at low speed. Their spades are parallel to the central air flow, and the depression in operation is generated by the static vanes located outside the vertical air flow.

These turrets will turn on automatically when the installation, operating in natural pull mode cannot guarantee minimum flows of ventilation. The detection of natural pull will be carried out using a temperature probe.

Model	REHIA T	
Manufacturer	Alder Venticontrol	
Turret plastic pull-PAA66 35 %FV		
Class of fire resistance		UL94 V0 (self-extinguishing)
Power Supply		From 8 to 12 VDC regulated and stabilized by the control panel REHIA 1-3
Power consumed		16 W
Maximum Intensity		1 A
Maximum engine speed		1000 rpm
Weight		5.5 Kg
Dimensions		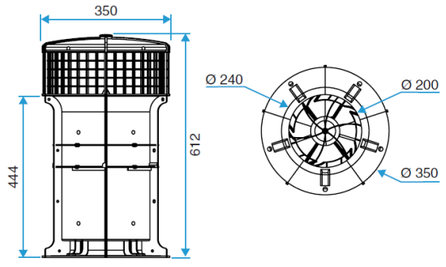

Table 3.6 Features of the REHIA T extraction turret.

Along with the extraction turrets a few REHIA Control panels shall be arranged. These control panels are the elements of centralized control, which make up the required plug-ins for the optimal functioning of the REHIA T turrets.

Its management module will allow us to control up to a maximum of three extraction turrets by centralizing the power and control of the turrets connected.

A temperature probe connected to the management module will adapt the speed of the turrets depending on the outside temperature.

Model	Control REHIA 1-3	
Manufacturer	Alder Venticontrol	
Scorecard IP55 for connection of up to three turrets		
Power Supply	230 VAC - 12VDC	
Built-in relay for connection of fault pilot		
Connection for temperature probe		
Incorporates a management module that controls the correct operation of the system		

Table 3.7. Features of the REHIA Control Panel.

4. SANITATION INSTALLATION

4.1. Introduction

The objective of this project is the study of the necessary characteristics to design a system to maintain a sufficient evacuation under conditions of adequate salubrity for a sanitation network.

4.2. Relationship of rules and regulations

- CTE-DB-HS5 (Código Técnico de la Edificación – Documento Básico Salubridad 5: Evacuación de aguas).
- CTE-DB-HR (Código Técnico de la Edificación – Documento Básico Protección frente al ruido).
- UNE related regulations.

4.3. Description of the installation

A separate system of water evacuation has been designed.

This installation will collect rain water and waste water separately and will lead them using a system of downspouts and horizontal collectors hung from first floor slab, running through the roof of the car park and hung from the sanitary slab that is on the ground floor to connect the two networks and eject the water toward the sewerage network through a joint collector hung from sanitary slab.

The connection of the two systems before the connection to the sewerage network is due to the fact that the public sewerage network is not separate.

Part of the wastewater sanitation will collect water from the toilets and from the drains of the indoor air conditioning machines. The rain water sanitation network will collect rain water on the roof through syphonic sinks.

The connection of the wastewater and rainwater networks will be made through a collecting manhole placed on supports in the sanitary slab. Using a mixed collector, water is lead to a syphonic manhole for its final evacuation into the public sewerage network.

Before the final connection to the sewerage network the system will be also equipped with an anti-odor and anti-rodent check valve, located after the syphonic manhole.

The two sanitation networks will have all the necessary items and special joints and records throughout the facility.

4.3.1. Wastewater sanitation network

As we have already said, this part of the installation will collect wastewaters from all of the toilets and interior air conditioning machines.

The first thing that we must take into account for the correct design of the installation of sanitation is the units of drainage for each appliance and their corresponding diameters of the individual leads and stubs collectors. In the case of this building the following have been laid down.

Type of appliance	Drainage Units UD	Diameter of siphon individual and individual lead (mm)
Washbasin	2	40
Toilet with cistern	5	100

Table 4.1. Drainage units of sanitary appliance.

For indoor air conditioning units 1 UD has been accounted for each machine according to the CTE, considering that the outlet diameter of the machine is 32 mm.

4.3.1.1. Individual branch

This is the point where wastewater sanitation network begins. Individual branches collect wastewater from sanitary appliances, toilets and air conditioning machines, and drive it to the nearest main downspout.

All the appliances will have a single corresponding diameter siphon to prevent the return of possible bad odors.

This part of the facility has individual branches made with a PVC tube with a diameter corresponding to the CTE tables and will run through the false ceiling, hanging from the top slab by galvanized steel clamps with a minimum slope of 2% to meet the main downspout.

The toilets were placed up to 2 meters from the nearest downspout to facilitate the evacuation distance.

In the case of individual branches of washbasins, some are connected directly to the nearest main downspout and others have been connected to a branch connecting more than one appliance. The drawings can distinguish the different cases.

Whenever these derivations pass through a wall or a floor an elastic and waterproof bushing is placed. This bushing allows some slack to ensure the moving range of the system.

4.3.1.2. Downspouts of wastewater network

The downspouts of residual evacuation are responsible for collecting the wastewater of the different types of equipment and lead it to the horizontal network of collectors.

A total of ten downspouts have been provided to satisfy the needs of sanitation and will run completely vertical without no diversion or change of direction throughout its length.

The downspouts are made of a special PVC tube for sanitation, coupled with specific special parts of the manufacturer and glued.

The downspouts are fixed to the walls using galvanized steel clamps every 1.50 m throughout its length as tube support.

Listed below are the dimensions and units of drainage of the downspouts of residual evacuation which have been scheduled.

Downspout	UD Ground Floor		UD First Floor		UD Second Floor		UD Third Floor		Total UD	Ø (mm)
R1	3xwashbasin 2xtoilet	16							16	110
R2	1xwashbasin 3xtoilet	17							17	110
R3			1xwashbasin 1xtoilet 2xAC	9	1xwashbasin 1xtoilet 2xAC	9	1xwashbasin 1xtoilet 2xAC	9	27	110
R4			1xAC	1	1xAC	1	1xAC	1	3	50
R5	1xAC	1	2xwashbasin 2xtoilet 1xAC	15	2xwashbasin 2xtoilet 1xAC	15	2xwashbasin 2xtoilet 1x AC	15	46	110
R6			1xwashbasin 1xtoilet	7	1xwashbasin 1xtoilet	7	1xwashbasin 1xtoilet	7	21	110
R7			1xwashbasin 2xtoilet	12					12	110
R8			1xmáq. AC	1	1xmáq. AC	1	1xmáq. AC	1	3	50
R9			2xmáq. AC	2	2xmáq. AC	2	2xmáq. AC	2	6	50
R10	1xmáq. AC	1			1xwashbasin 1xtoilet	7	1xwashbasin 1xtoilet	7	15	110

Table 4.2. Units of drainage and diameters of the downspouts.

4.3.1.3. Horizontal wastewater collectors

Horizontal wastewater disposal collectors are responsible for collecting wastewater from downspouts and lead it to the collecting manhole located on the ground floor sanitary slab, later to evacuate them to the public sewerage network.

These collectors are made of special PVC tube for sanitation, coupled with specific special manufacturer's parts and pieces, and will be hung of the slab of the first floor, on the ceiling of the car park, and will be hung of sanitary slab of the ground floor.

All collector system will have a minimum slope of 2% throughout its length to facilitate the removal of wastewater.

Below are the Diameters chosen for the horizontal collectors.

Point	Accumulated UDs		Ø Collector (mm)
A	R9 + R10	21	110
B	A + R7	33	110
C	B + R8	36	110
D	C + R6	57	110
E	D + R4	60	110
F	E + R5	106	110
G	R1 + R2	33	110
H	G + R3	60	110
I	H + F	166	110

Table 4.3. Waste collectors diameters.

4.3.1.4. Ventilation and connecting elements

The installation of wastewater sanitation network will have a ventilation system required by the regulations.

According to the requirements that the CTE brands a primary ventilation system has been chosen.

This system will keep the wastewater sanitation network ventilated and it consists of extending the wastewater downspouts 1.30 meters above the top floor. At the top of the tube a cap will be placed to promote the effect of ventilation and avoid anything that may come into the downspout.

With regard to the elements of connection, the entire wastewaters sanitation network will have special connections according to the manufacturer of the PVC tubes used and with galvanized steel clamps every 1.50 meters to ensure the support of the tube system.

In the connections between collectors, changes of direction and endings of downspouts a special piece that will incorporate a threaded plug to allow the registration of the tubes is placed. Between registration and registration straight sections of less than 15 meters have been left.

4.3.2. Rainwater sanitation network

The rainwater sanitation network is responsible for the collecting rain water from the top floor through syphonic sink and leading it into the public sewerage network.

For the proper design of the rainwater system is necessary to know the intensity of the rainfall regime of the area where the building is situated by a table of Annex B of the CTE-DB-HS5. In the case of the project building, located near Barcelona, you get a regime of intensity rainfall of 110 mm/h since the building is located in the isohyet 50 rainfall in the area B.

This means that we will have to apply a correction factor on the cover surface served to obtain the diameters of the downspouts and the collectors of the rainwater drainage system in the tables of the CTE.

$$F = i/100$$

, being ‘’i’’ the rainfall intensity to consider

$$F = 110/100 = 1.1$$

4.3.2.1. Sinks

The sinks are responsible for moving the water collected in the top floor by the downspouts of the rainwater network through a small stretch of individual branch or directly to the downspout, depending on the case.

According to the square meters of the top floor of the building, 892.60 m^2, we must place a sink every 150 m^2, which gives us a total of six sinks.

These sinks will be made of PVC, syphonic, self-cleaning, and their size will be in accordance with the regulations.

Manufacturer	JIMTEN	
Model	S246	
Auto cleaning syphonic sink, vertical outlet gluing PVC, enclosure and grill made of stainless steel.		

Table 4.4. Syphonic sink.

4.3.2.2. Rainwater network downspouts

The downspouts of the rainwater sanitation network are responsible for transporting the water that collect the top floor sinks towards horizontal collectors.

The rainwater downspouts have been prepared entirely vertical, without any deviation or change of direction along its length. There will be a total of six downspouts.

The downspouts to the drainage of rainwater will be made of special PVC tube for sanitation, coupled with specific special parts of the manufacturer and glued. Fixations of the tubes are made using galvanized steel clamps every 1.50 meters throughout its route.

Listed below are the dimensions and the square meters of the top floor serving the rainwater downspouts.

Downspout	m^2 served	Correction factor (x1,1)	Ø (mm)
P1	169	186	90
P2	194	213	90
P3	109	120	75
P4	127	140	75
P5	108	119	75
P6	158	173	75

Table 4.5. Rainwater downspout diameters.

4.3.2.3. Horizontal rainwater collectors

The horizontal collectors are responsible for collecting rainwater from downspouts and lead it horizontally to a point where they will be connected with the wastewater sanitation network through a collector manhole located in the sanitary slab on the ground floor, for being expelled to the public sewerage network later.

The collectors will be made of of special PVC tube for sanitation, joined through special parts manufacturer specific and glued. It will be hung from the first floor, on the ceiling of the car park, and from the sanitation slab on the ground floor through clamps of galvanized steel every 1.50 meters to ensure the subject.

The system of collectors will have a slope of at least 1% in all the way to facilitate the evacuation of the rainwater.

The following are the elected diameters of the horizontal network of collectors.

Point	M2 accumulated		Ø Collector (mm)
A	P4 + P3	260	110
B	A + P5	368	1250
C	B + P6	526	160
D	P1 + P2	399	125
E	C + D	925	200

Table 4.6. Rainwater collector diameters.

4.3.2.4. Connecting Elements

The entire network of rainwater sanitation will have special connections according to the manufacturer of PVC tubes used and with clamps of galvanized steel every 1.50 meters to ensure the support of the tube system.

In the connections between collectors, changes of direction and ending of downspouts a special piece that will incorporate a threaded plug to allow the registration of the tubes is placed. Between registration and registration straight sections of less than 15 meters have been left.

4.3.3. Mixed sanitation network

This is the final part of the sanitation network installation, which joins the wastewater and rainwater networks with the public sewerage network. It runs all through the sanitary slab on the ground floor.

The fact of joining two drainages before connecting to the sewage network is due to the fact that this network is unique, not separated.

The elements that make up this part of the installation are a collector manhole that joins the wastewater network with the rainwater network, a joint collector tube, a syphonic manhole, the connection to the sewerage network and a check valve located after the syphonic manhole.

The collector manhole will be made of prefabricated concrete and will be mounted on supports made of bricks to raise the manhole. It will be 60 x 60 cm and it will have a cover to make it available for inspection. It will reach the collector of the wastewater network and the collector of rainwater network. From the collector manhole a mixed collector will come out to a syphonic manhole.

The mixed collector will be made of a special PVC tube for sanitation and will be hung from the sanitary slab with clamps of galvanized steel. It will have a 200 mm diameter.

Sum of the m^2 served			**Ø Collector (mm)**
Residual	For < 250 UD = 90 m^2 x *f* 90 X 1.1 = 99	1024	200
Rain	925		

Table 4.7. Mixed collector diameter.

The syphonic manhole will be made of prefabricated concrete and will be placed on top of a few supports made of bricks in the sanitary slab on the ground floor. It will be 60 x 60 cm and it will have a cover to make it registerable.

The joining with the sewerage network will have similar characteristics to the mixed collector tube, with 200 mm diameter and will be the final part of the installation. It will join the syphonic manhole with the public sewerage network.

In the final connection tube, just after the syphonic manhole, an anti-odor and anti-rodent non-return valve is placed.