INDEX

ANNEXES

Index 1

A. Datasheets 3

A.1. Maxon Motor EC (397172) 3

A.2. Maxon Motor Encoder MR (228456) 4

A.3. Maxon Motor EPOS 24/5 (367676) 5

A.4. Hohner HS10-31312117-1024 7

A.5. Utilcell Load Cell 102 11

A.6. SKF ball bearings (6002) 13

A.7. Dewetron Universal Data Acquisition Instrument DEWE-43 15

B. Anthropometric parameters of lower limb segments 17

C. Calculations 19

C.1. Loads for static and horizontal configuration 19

C.2. Loads on bearings 21

C.3. Bolt coupling between actuation system and test bench 22

D. Drawings of the test bench 25

D.1. Assembly drawing and bill of materials 25

D.2. Parts' drawings 29

A. DATASHEETS

A.1. Maxon Motor EC (397172)

EC 45 flat ∅42.8 mm, brushless, 70 Watt

maxon flat motor

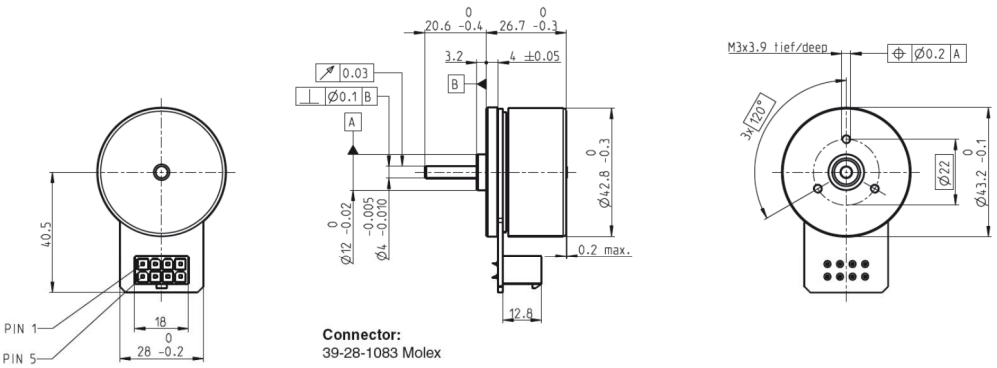

Connector:
39-28-1083 Molex

M 1:2

Stock program
Standard program
Special program (on request)

Part Numbers

with Hall sensors	397172	402685	402686	402687
Motor Data (provisional)				
Values at nominal voltage				
1 Nominal voltage V	24	30	36	48
2 No load speed rpm	6110	6230	6330	3440
3 No load current mA	234	194	166	48.1
4 Nominal speed rpm	4860	4990	5080	2540
5 Nominal torque (max. continuous torque) mNm	128	112	108	134
6 Nominal current (max. continuous current) A	3.21	2.36	1.93	0.936
7 Stall torque mNm	1460	1170	1100	915
8 Starting current A	39.5	25.8	20.7	6.97
9 Max. efficiency %	85	84	83	84
Characteristics				
10 Terminal resistance phase to phase Ω	0.608	1.16	1.74	6.89
11 Terminal inductance phase to phase mH	0.463	0.691	0.966	5.85
12 Torque constant mNm / A	36.9	45.1	53.3	131
13 Speed constant rpm / V	259	212	179	72.7
14 Speed / torque gradient rpm / mNm	4.26	5.44	5.85	3.82
15 Mechanical time constant ms	8.07	10.3	11.1	7.24
16 Rotor inertia gcm²	181	181	181	181

Specifications

Thermal data
17 Thermal resistance housing-ambient 3.56 K/W
18 Thermal resistance winding-housing 4.1 K/W
19 Thermal time constant winding 29.6 s
20 Thermal time constant motor 178 s
21 Ambient temperature -40 ... +100°C
22 Max. permissible winding temperature +125°C

Mechanical data (preloaded ball bearings)
23 Max. permissible speed 10000 rpm
24 Axial play at axial load < 4.0 N 0 mm
> 4.0 N 0.14 mm
25 Radial play preloaded
26 Max. axial load (dynamic) 3.8 N
27 Max. force for press fits (static) 50 N
(static, shaft supported) 1000 N
28 Max. radial load, 8 mm from flange 21 N

Other specifications
29 Number of pole pairs 8
30 Number of phases 3
31 Weight of motor 141 g

Values listed in the table are nominal.

Connection
Pin 1 Hall sensor 1*
Pin 2 Hall sensor 2*
Pin 3 V_{Hall} 4.5 ... 18 VDC
Pin 4 Motor winding 3
Pin 5 Hall sensor 3*
Pin 6 GND
Pin 7 Motor winding 1
Pin 8 Motor winding 2
*Internal pull-up (7 ... 13 kΩ) on pin 3
Wiring diagram for Hall sensors see p. 35

Cable
Connection cable Universal, L = 500 mm **339380**
Connection cable to EPOS, L = 500 mm **354045**

Operating Range

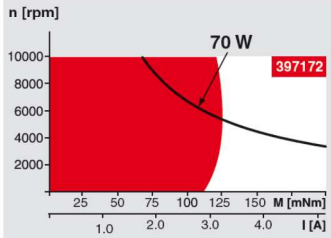

Comments

Continuous operation
In observation of above listed thermal resistance (lines 17 and 18) the maximum permissible winding temperature will be reached during continuous operation at 25°C ambient.
= Thermal limit.

Short term operation
The motor may be briefly overloaded (recurring).

Assigned power rating

maxon Modular System Overview on page 20–25

Planetary Gearhead
∅42 mm
3 - 15 Nm
Page 284

Spur Gearhead
∅45 mm
0.5 - 2.0 Nm
Page 286

Encoder MILE
256 - 2048 CPT,
2 channels
Page 308

Recommended Electronics:

ESCON 36/3 EC	Page 342
ESCON Mod. 50/4 EC-S	343
ESCON Module 50/5	343
ESCON 50/5	344
DEC Module 50/5	346
EPOS2 Module 36/2	350
EPOS2 24/5	351
EPOS2 P 24/5	354
EPOS3 70/10 EtherCAT	357
MAXPOS 50/5	360
Notes	**24**

Option
With Cable and Connector
(Ambient temperature -20 ... +100°C)

April 2014 edition / subject to change

maxon EC motor 233

ETSEIB

A.2. Maxon Motor Encoder MR (228456)

maxon sensor

Encoder MR Type L, 256–1024 CPT, 3 Channels, with Line Driver

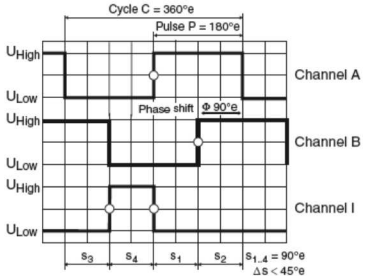

Direction of rotation cw (definition cw p. 78)

Stock program
Standard program
Special program (on request)

Part Numbers	225783	228452	225785	228456	225787
Type					
Counts per turn	256	500	512	1000	1024
Number of channels	3	3	3	3	3
Max. operating frequency (kHz)	80	200	160	200	320
Max. speed (rpm)	18750	24000	18750	12000	18750

maxon Modular System

+ Motor	Page	+ Gearhead	Page	+ Brake	Page	Overall length [mm] / ● see Gearhead				
RE 30, 15 W	110					79.4	79.4	79.4	79.4	79.4
RE 30, 15 W	110	GP 32, 0.75 - 4.5 Nm	274			●	●	●	●	●
RE 30, 60 W	111					79.4	79.4	79.4	79.4	79.4
RE 30, 60 W	111	GP 32, 0.75 - 4.5 Nm	272			●	●	●	●	●
RE 30, 60 W	111	GP 32, 0.75 - 6.0 Nm	274-278			●	●	●	●	●
RE 30, 60 W	111	GP 32 S	301-303			●	●	●	●	●
RE 35, 90 W	112					82.4	82.4	82.4	82.4	82.4
RE 35, 90 W	112	GP 32, 0.75 - 4.5 Nm	272			●	●	●	●	●
RE 35, 90 W	112	GP 32, 0.75 - 6.0 Nm	274-278			●	●	●	●	●
RE 35, 90 W	112	GP 32, 4.0 - 8.0 Nm	279			●	●	●	●	●
RE 35, 90 W	112	GP 42, 3 - 15 Nm	283			●	●	●	●	●
RE 35, 90 W	112	GP 32 S	301-303			●	●	●	●	●
RE 40, 150 W	114					82.4	82.4	82.4	82.4	82.4
RE 40, 150 W	114	GP 42, 3 - 15 Nm	283			●	●	●	●	●
RE 40, 150 W	114	GP 52, 4 - 30 Nm	287			●	●	●	●	●
A-max 32	142/144					72.7	72.7	72.7	72.7	72.7
A-max 32	142/144	GP 32, 0.75 - 6.0 Nm	274-277			●	●	●	●	●
A-max 32	142/144	GS 38, 0.1 - 0.6 Nm	282			●	●	●	●	●
A-max 32	142/144	GP 32 S	301-303			●	●	●	●	●
EC-max 40, 70 W	206					73.9	73.9	73.9	73.9	73.9
EC-max 40, 70 W	206	GP 42, 3 - 15 Nm	284			●	●	●	●	●
EC-max 40, 120 W	207					103.9	103.9	103.9	103.9	103.9
EC-max 40, 120 W	207	GP 52, 4 - 30 Nm	288			●	●	●	●	●
EC-i 40, 50 W	228					41.9	41.9	41.9	41.9	41.9
EC-i 40, 50 W	228	GP 32, 1 - 6 Nm	277			●	●	●	●	●
EC-i 40, 50 W	228	GP 32 S	301-303			●	●	●	●	●
EC-i 40, 70 W	229					51.9	51.9	51.9	51.9	51.9
EC-i 40, 70 W	229	GP 32, 1 - 6 Nm	277			●	●	●	●	●
EC-i 40, 70 W	229	GP 32 S	301-303			●	●	●	●	●

Technical Data

Supply voltage V_{CC}	5 V ± 5%
Output signal	TTL compatible
Phase shift Φ	90°e ± 45°e
Index pulse width	90°e ± 45°e
Operating temperature range	-25...+85°C
Moment of inertia of code wheel	≤ 1.7 gcm²
Output current per channel	max. 5 mA

The index signal I is synchronized with channel A or B.

Pin Allocation

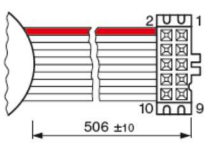

1	N.C.
2	V_{CC}
3	GND
4	N.C.
5	Channel $\overline{A}$
6	Channel A
7	Channel $\overline{B}$
8	Channel B
9	Channel $\overline{I}$ (Index)
10	Channel I (Index)

DIN Connector 41651/
EN 60603-13
flat band cable AWG 28

Connection example

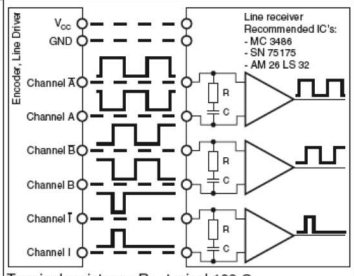

Terminal resistance R = typical 120 Ω
Capacitor C ≥ 0.1 nF per m line length

ETSEIB

A.3. Maxon Motor EPOS 24/5 (367676)

EPOS2 Positioning Controllers Summary

maxon motor control

Online commanded

EPOS2 24/2
- Several device variations allows the operation of various maxon DC and EC micromotors up to 48 watts
- Point to point control (1 axis)
- Interpolated Position Mode (PVT)
- Combination of several drives via CAN Bus
- CANopen
- 6 digital inputs
- 2 digital outputs
- 2 analog inputs
- Miniaturized design

Details pages 348–350

Slave version (online commanded) using CAN Master (EPOS2 P, PC, PLC, SoftPLC, etc.) or PC via USB or RS232 interface

Typical applications:
- Small apparatus/appliances
- System automation tasks
- Drive technology

Part Numbers
EPOS2 24/2 **380264, 390003 390438**

Online commanded

EPOS2 Module 36/2
- DC and EC motors up to 72 W
- Point to point control unit (1 axis)
- Interpolated Position Mode (PVT)
- Combination of several drives via CAN Bus
- CANopen
- 6 digital inputs
- 3 digital outputs
- 2 analog inputs
- Miniaturized open electronics board (OEM)

Details pages 348–350

Slave version (online commanding) using CAN Master (EPOS2 P, PC, PLC, SoftPLC, µ-Processor, etc.) or PC via USB *) or RS232 interface

*) requires external transceiver

Typical applications:
- Small apparatus/appliances
- System automation tasks
- OEM customers

Part Number
EPOS2 Module 36/2 **360665**

Online commanded

EPOS2 24/5
- DC and EC motors up to 120 W
- Point to point control unit (1 axis)
- Interpolated Position Mode (PVT)
- Combination of several drives via CAN Bus
- CANopen
- 6 digital inputs
- 4 digital outputs
- 2 analog inputs
- Compact design

Details pages 348–351

Slave version (online commanding) using CAN Master (EPOS2 P, PC, PLC, SoftPLC, etc.) or PC via USB or RS232 interface

Typical applications:
- Tool building
- Production equipment
- System automation tasks

Part Number
EPOS2 24/5 **367676**

Online commanded

EPOS2 50/5
- DC and EC motors up to 250 W
- Point to point control unit (1 axis)
- Interpolated Position Mode (PVT)
- Combination of several drives via CAN Bus
- CANopen
- 11 digital inputs
- 5 digital outputs
- 2 analog inputs
- 1 analog output
- Compact design

Details pages 348–351

Slave version (online commanding) using CAN Master (EPOS2 P, PC, PLC, SoftPLC, etc.) or PC via USB or RS232 interface

Typical applications:
- Tool building
- Production equipment
- System automation tasks

Part Number
EPOS2 50/5 **347717**

Online commanded

EPOS2 70/10
- DC and EC motors up to 700 W
- Point to point control unit (1 axis)
- Interpolated Position Mode (PVT)
- Combination of several drives via CAN Bus
- CANopen
- 10 digital inputs
- 5 digital outputs
- 2 analog inputs
- Robust design

Details pages 348–351

Slave version (online commanding) using CAN Master (EPOS2 P, PC, PLC, SoftPLC, etc.) or PC via USB or RS232 interface

Typical applications:
- Production equipment
- System automation tasks
- Plant construction

Part Number
EPOS2 70/10 **375711**

CANopen USB RS232 GUI

maxon motor control

EPOS2 24/5
Matched with DC brush motors with encoder or brushless EC motors with Hall sensors and encoder, from 5 to 120 watts.

EPOS2 50/5
Matched with DC brush motors with encoder or brushless EC motors with Hall sensors and encoder, from 5 to 250 watts.

EPOS2 70/10
Matched with DC brush motors with encoder or brushless EC motors with Hall sensors or encoder, from 80 to 700 watts.

Controller versions		
CANopen Slave	CANopen Slave	CANopen Slave
Electrical Data		
11 - 24 VDC	11 - 50 VDC	11 - 70 VDC
11 - 24 VDC	11 - 50 VDC	11 - 70 VDC
0.9 x V_{CC}	0.9 x V_{CC}	0.9 x V_{CC}
10 A	10 A	25 A
5 A	5 A	10 A
50 kHz	50 kHz	50 kHz
10 kHz	10 kHz	10 kHz
1 kHz	1 kHz	1 kHz
1 kHz	1 kHz	1 kHz
25 000 rpm (sinusoidal); 100 000 rpm (block)	25 000 rpm (sinusoidal); 100 000 rpm (block)	25 000 rpm (sinusoidal); 100 000 rpm (block)
15 µH / 5 A	22 µH / 5 A	25 µH / 10 A
Input		
H1, H2, H3	H1, H2, H3	H1, H2, H3
A, A\, B, B\, I, I\ (max. 5 MHz)	A, A\, B, B\, I, I\ (max. 5 MHz)	A, A\, B, B\, I, I\ (max. 5 MHz)
6 (TTL and PLC level)	11 (7 optically isolated, 4 differential)	10 (7 optically isolated, 3 differential)
2 12-bit resolution, 0...+5 V	2 (differential) 12-bit resolution, ±10 V	2 (differential) 12-bit resolution, 0...+5 V
configurable with DIP switch 1...7	configurable with DIP switch 1...7	configurable with DIP switch 1...7
Output		
4	5 (4 optically isolated, 1 differential)	5 (4 optically isolated, 1 differential)
	1 (12-bit, 0...10 V)	
+5 VDC, max 100 mA	+5 VDC, max. 100 mA	+5 VDC, max. 100 mA
+5 VDC, max. 30 mA	+5 VDC, max. 30 mA	+5 VDC, max. 30 mA
V_{CC}, max. 1300 mA	+5 VDC, max. 150 mA	+5 VDC, max. 150 mA; +5 VDC (R_i = 1 kΩ)
Interface		
RxD; TxD (max. 115 200 bit/s)	RxD; TxD (max. 115 200 bit/s)	RxD; TxD (max. 115 200 bit/s)
high; low (max. 1 Mbit/s)	high; low (max. 1 Mbit/s)	high; low (max. 1 Mbit/s)
Data+; Data- (max. 12 Mbit/s)	Data+; Data- (max. 12 Mbit/s)	Data+; Data- (max.12 Mbit/s)
Indicator		
green LED, red LED	green LED, red LED	green LED, red LED
Ambient temperature and humidity range		
-10...+45°C	-10...+45°C	-10...+45°C
-40...+85°C	-40...+85°C	-40...+85°C
20...80%	20...80%	20...80%
Mechanical data		
Approx. 170 g	Approx. 240 g	Approx. 330 g
105 x 83 x 24 mm	120 x 93.5 x 27 mm	150 x 93 x 27 mm
Flange for M3-screws	Flange for M3-screws	Flange for M3-screws
Part Numbers		
367676 EPOS2 24/5	**347717** EPOS2 50/5	**375711** EPOS2 70/10

Accessories		
309687 DSR 50/5 Shunt regulator	**309687** DSR 50/5 Shunt regulator	**235811** DSR 70/30 Shunt regulator
Order accessories separately, see page 362	Order accessories separately, see page 362	Order accessories separately, see page 362

ETSEIB

A.4. Hohner HS10-31312117-1024

GENERAL INFORMATION ANALOG

ABSOLUT AND PROGRAMMABLE ABSOLUT ANALOG ENCODERS

Analog interface

The analog interface has two outputs: one provides the absolut position measurement as a voltage (0/10v), and the other as a current (0/20mA or 4/20mA). Both outputs come from a singleturn absolut encoder with a 12bit resolution, with the 0 absolut position (0 degrees) havin a value of 0v at the V+ output and 4 or 0 mA at the I+ output.

When the absolut position is 4095 (359 degrees) the V+ output will be 10v and the I+ output will be 20mA. These outputs consist of four wires (two per output) I+, I- and V+, V-. Thus forming two measurement loops. Depending on the measurement system implemented by the customer, one or the other output will be used.

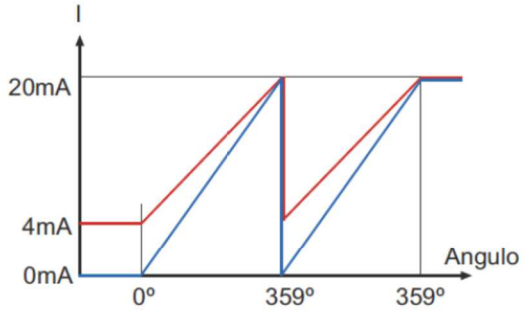

Current output

Electrical specifications

Output form	0/20mA o 4/20mA
Resolution	Up to 12 bits (4096 positions) for 360º
Thermal stability	±20 ppm/ºC
Update frequency	100KHz
Linearity error	0.07% of the active angle
R_{LOAD} máx.	(V_{IN} - 2 V)/20mA)
R_{LOAD} min.	150Ω

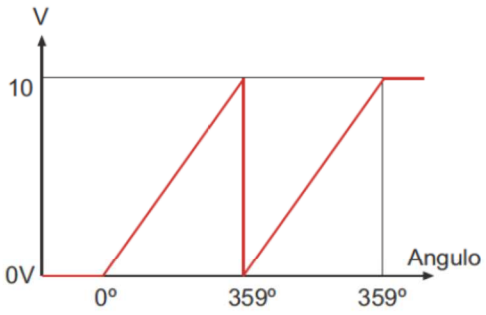

Voltage output

Electrical specifications

Output form	0/10V (Vcc min.=12V)
Resolution	Up to 12 bits (4096 positions) for 360º
Slew Rate	0.7V/us
Update frequency	100KHz
Linearity error	0.05% of the active angle
Load resistance	>5kΩ
Protection against shortcircuit	Yes

ABSOLUT ENCODERS ANALOG

- Interface analog current loop output 4..20mA, 0..20mA and 0..10 V voltage output
- Resolution 10 or 12 bits
- Solid or blind hollow shaft
- Protection class IP65 or IP67 according to DIN 40050
- Direction and range selectable
- Radial or axial connection, cable or connector output

OVERVIEW

	Diameter 58 mm		Diameter 90 mm
	Solid shaft	Hollow shaft	Solid shaft
Singleturn	CS10 CS10 IP67	HS10	CS30 CS30 IP67
Multiturn	CM10 CM10 IP67	HM10	CM30 CM30 IP67
Multiturn programmable	CMP10	HMP10	

TECHNICAL SPECIFICATIONS

	Diameter 58 mm		Diameter 90 mm
Housing		Aluminium/Stainless steel	
Shaft		Stainless steel	
Bearings		Ballraces	
Bearings lifetime		$1x10^{10}$ rev.	
Maximum number of revolutions permitted mechanically		6000 rpm.	
Protection against dust and splashes according to DIN 40050		IP65 / IP67.	
Rotor inertia moment	30 gcm²		270 gcm²
Starting torque 20ºC (68ºF)	Máx. 2,0 Ncm		Máx. 5,0 Ncm
Maximum load permitted on axial shaft	40 N		80 N
Maximum load permitted on radial shaft	60 N		100 N
Misalignment permitted axial (blind hollow shaft)	±0.5 mm		-
Misalignment permitted radial (blind hollow shaft)	±0.3 mm		-
Weight aprox.	400 g ST, 500 g MT		1,2 kg ST, 1,3 kg MT
Operating temperature range		-10ºC a +70ºC	
Vibration		100 m/s² (10Hz...2000Hz)	
Shock		1000 m/s² (6ms)	
Consumption max.		100 mA (CS/HS), 150 mA (CM/HM)	
Power supply		10..30Vdc	
Interface		Analogue	
Electrical output		0..20mA, 0..10v, 4..20mA	
Configurable parameter (programmable series)		Range	
Configurable parameters		Direction	
Resolution		10 or 12 bits	
Maximum range		4096 turns	
Radial and axial connection		2 metres cable or industrial connector	

ST: Singleturn MT: Multiturn

ANALOG SERIES CS10 / HS10

SINGLETURN ABSOLUT ENCODER

- Singleturn resolution up to 12 bits
- Protection class IP65 according to DIN 40050
- External diameter 58 mm
- Solid shaft (CS) and blind hollow shaft (HS)

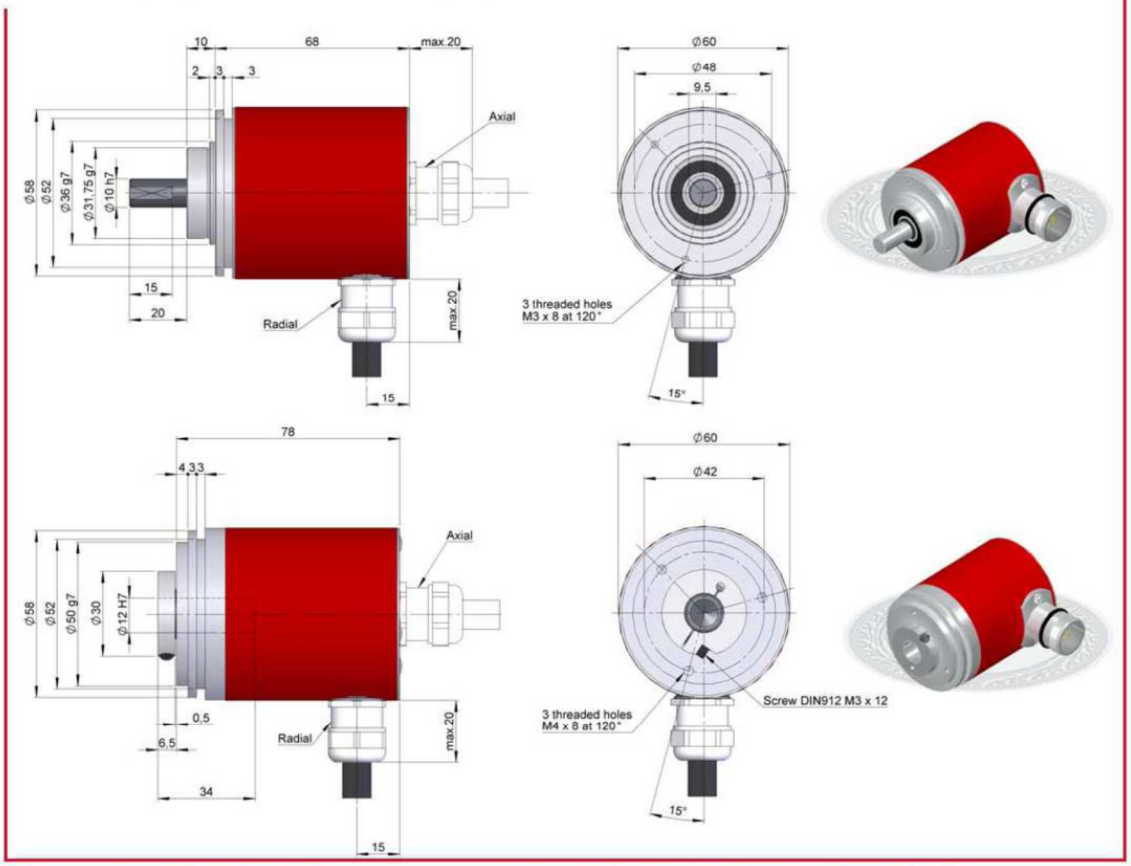

Previous mounting and installation of the encoder is recommended to read the section "TECHNICAL CONSIDERATIONS".

ORDERING CODE

TYPE	SERIE	SHAFT	FLANGE	CONNEC-TION	AXIAL RADIAL	INTERFACE	CODE	IP	POWER SUPPLY OUTPUT	CONFIG. PARAMETERS	RESOLUTION	RANGE	SPECIAL CUSTOMER
●●	10	●	●	●	●	●	●	●	●	●	●●●●	●●●	●●

CS- Singleturn Solid shaft
HS- Singleturn Blind hollow shaft

1- Solid Ø6x10 mm
2- Solid Ø10x20 mm
3- Blind hollow Ø12 mm
4- Blind hollow Ø10 mm

1- None
2- 90.1002
3- 90.1003
4- 90.1004
5- 90.1005
6- 90.1006

1- Cable
3- 90.9512

1- Axial
2- Radial

2- Analog

1- Clockwise
2- Counter clockwise

1- IP65

5- 0...20mA, 15-30V
6- 4...20mA, 15-30V
7- 0...10V, 15-30V

S- Direction

1024- 10 bits
4096- 12 bits

Blank- 360 degrees
180- 180 degrees
90- 90 degrees
45- 45 degrees

ETSEIB

CONNECTION AND CONNECTORS

ANALOG OUTPUT CONNECTIONS

	Cable 5 x 0.14 Output current	Cable 5 x 0.14 Output voltage	90.9512 M23 12p
GND	Yellow	Yellow	1
Vcc	White	White	2
I +	Brown	-	3
I -	Green	-	4
V +	-	Brown	5
V -	-	Green	6
DIR	Grey	Grey	7
Screen	Screen	Screen	12

A.5. Utilcell Load Cell 102

UTILCELL
CELULAS DE CARGA - LOAD CELLS

MODELO 102

5kg ... 50kg

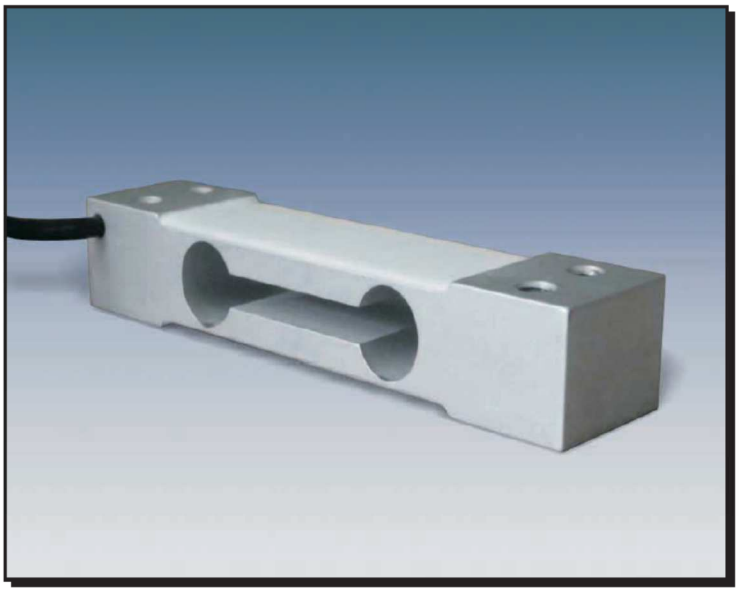

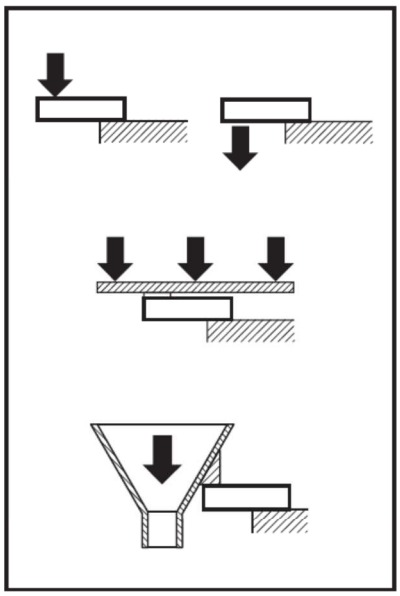

- **Célula de carga de flexión**
- **Soporte elástico de aluminio**
- **3000 divisiones O.I.M.L. R60 clase C**
- **Protección IP 66 (EN 60529)**
- **Gran precisión con cargas descentradas**
- **Aplicaciones:**
  - **Plataformas monocélula hasta 350 x 350 mm**
  - **Ensacadoras**

- **Double bending beam load cell**
- **Measuring element from aluminium**
- **3000 divisions O.I.M.L. R60 class C**
- **Protected IP 66 (EN 60529)**
- **Single point load cell. High accuracy with off-center loads**
- **Applications:**
  - **Direct platform up to 350 x 350 mm**
  - **Filling scales**

Modelo Model	Carga nominal Nominal capacity Ln	Clase de precisión Accuracy class n. OIML	División mínima Minimum division vmin	Carga de servicio Service load 150 % Ln	Plataforma Platform A x B mm	Precisión Accuracy 1/3 Ln
102 5 kg	5 kg	3000	0.7 g	7.5 kg	350 x 350	3000 v
102 8 kg	8 kg	3000	1 g	12 kg	350 x 350	3000 v
102 10 kg	10 kg	3000	1.3 g	15 kg	350 x 350	3000 v
102 15 kg	15 kg	3000	1.9 g	22.5 kg	350 x 350	3000 v
102 20 kg	20 kg	3000	2.5 g	30 kg	350 x 350	3000 v
102 30 kg	30 kg	3000	3.8 g	45 kg	350 x 350	3000 v
102 50 kg	50 kg	3000	6.3 g	75 kg	350 x 350	3000 v

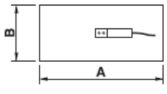

ETSEIB

MODELO 102

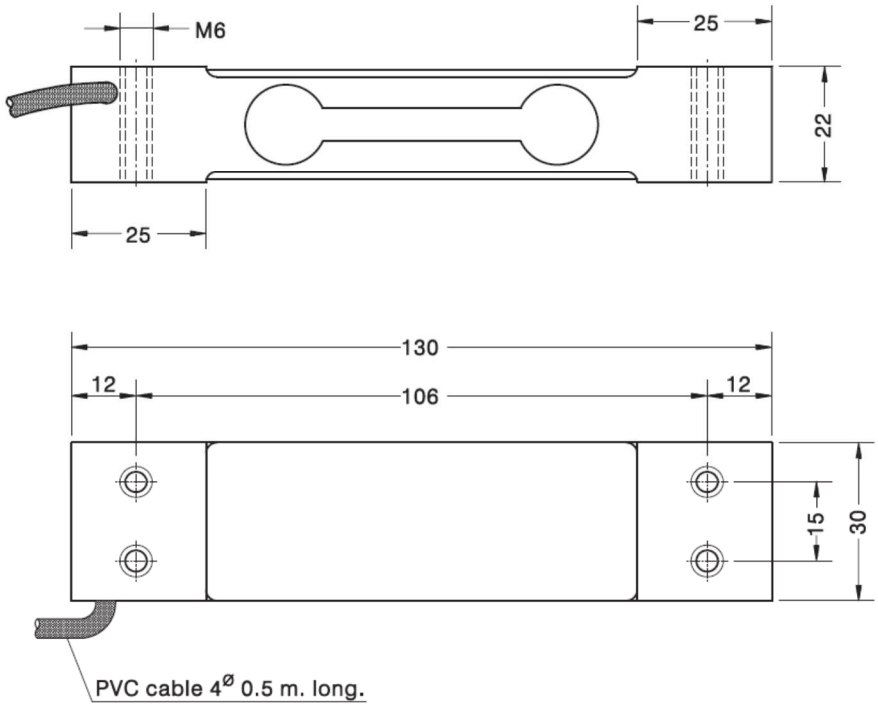

Dimensiones en mm. *Dimensions in mm.*

Peso transporte - *Transport weight:* 0.2 kg

ESPECIFICACIONES			SPECIFICATIONS
Cargas nominales (Ln)	5-8-10-15 20-30-50	kg	Nominal capacities (Ln)
Clase de precisión	3000	n. OIML	Accuracy class
Carga mínima Carga de servicio Cargas límite	0 150 200	%Ln %Ln (1) %Ln (1)	Minimum dead load Service load Safe load limit
Error combinado Error repetibilidad	< ±0.017 < ±0.01	%Sn (2) %Sn	Total error Repeatability error
Efecto de la temperatura: en el cero en la sensibilidad	 < ±0.01 < ±0.006	 %Sn/5°K %Sn/5°K	Temperature effect: on zero on sensitivity
Error de fluencia (30 minutos)	< ±0.016	%Sn	Creep error (30 minutes)
Compensación de temperatura Límites de temperatura	-10...+40 -20...+70	°C °C	Temperature compensation Temperature limits
Sensibilidad nominal (Sn) Tensión de alimentación nominal Tensión de alimentación máxima Resistencia de entrada Resistencia de salida Desequilibrio inicial Resistencia de aislamiento	2 ±10% 10 15 400 ±20 350 ±3 < ±2 > 5000	mV/V V V Ω Ω %Sn MΩ	Nominal sensitivity (Sn) Nominal input voltage Maximum input voltage Input impedance Output impedance No load output Insulation resistance
Deformación máxima (a Ln)	0.3-0.5	mm	Maximum deflection (at Ln)

(1) En carga centrada sobre la célula. No para cargas excéntricas
Only central loads on the load cell. Not for off-center loads
(2) Error combinado: No Linealidad e Histéresis / Total error: Non Linearity and Hysteresis

CONEXION ELECTRICA
ELECTRICAL CONNECTION:

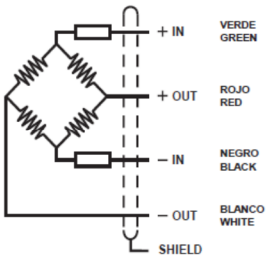

A.6. SKF ball bearings (6002)

1.1 Single row deep groove ball bearings
d 12 – 22 mm

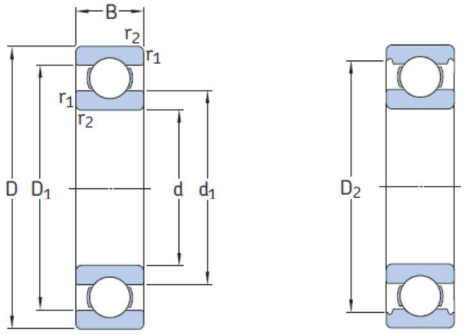

Principal dimensions			Basic load ratings dynamic	static	Fatigue load limit	Speed ratings Reference speed	Limiting speed	Mass	Designation
d	D	B	C	C_0	P_u				
mm			kN		kN	r/min		kg	–
12	21	5	1,74	0,915	0,039	70 000	43 000	0,0063	61801
	24	6	2,91	1,46	0,062	67 000	40 000	0,011	61901
	28	8	5,4	2,36	0,1	60 000	38 000	0,021	* 6001
	30	8	5,07	2,36	0,1	60 000	38 000	0,026	16101
	32	10	7,28	3,1	0,132	50 000	32 000	0,037	* 6201
	37	12	10,1	4,15	0,176	45 000	28 000	0,06	* 6301
15	24	5	1,9	1,1	0,048	60 000	38 000	0,0065	61802
	28	7	4,36	2,24	0,095	56 000	34 000	0,016	61902
	32	8	5,85	2,85	0,12	50 000	32 000	0,03	* 16002
	32	9	5,85	2,85	0,12	50 000	32 000	0,03	* 6002
	35	11	8,06	3,75	0,16	43 000	28 000	0,045	* 6202
	42	13	11,9	5,4	0,228	38 000	24 000	0,082	* 6302
17	26	5	2,03	1,27	0,054	56 000	34 000	0,0075	61803
	30	7	4,62	2,55	0,108	50 000	32 000	0,016	61903
	35	8	6,37	3,25	0,137	45 000	28 000	0,038	* 16003
	35	10	6,37	3,25	0,137	45 000	28 000	0,038	* 6003
	40	12	9,95	4,75	0,2	38 000	24 000	0,065	* 6203
	40	12	11,4	5,4	0,228	38 000	24 000	0,064	6203 ETN9
	47	14	14,3	6,55	0,275	34 000	22 000	0,11	* 6303
	62	17	22,9	10,8	0,455	28 000	18 000	0,27	6403
20	32	7	4,03	2,32	0,104	45 000	28 000	0,018	61804
	37	9	6,37	3,65	0,156	43 000	26 000	0,037	61904
	42	8	7,28	4,05	0,173	38 000	24 000	0,05	* 16004
	42	12	9,95	5	0,212	38 000	24 000	0,067	* 6004
	47	14	13,5	6,55	0,28	32 000	20 000	0,11	* 6204
	47	14	15,6	7,65	0,325	32 000	20 000	0,098	6204 ETN9
	52	15	16,8	7,8	0,335	30 000	19 000	0,14	* 6304
	52	15	18,2	9	0,38	30 000	19 000	0,14	6304 ETN9
	72	19	30,7	15	0,64	24 000	15 000	0,41	6404
22	50	14	14	7,65	0,325	30 000	19 000	0,13	62/22
	56	16	18,6	9,3	0,39	28 000	18 000	0,18	63/22

* SKF Explorer bearing

ETSEIB

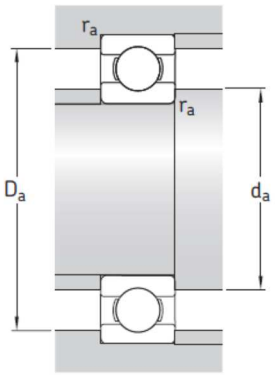

Dimensions					Abutment and fillet dimensions			Calculation factors	
d	d_1 ~	D_1 ~	D_2 ~	$r_{1,2}$ min.	d_a min.	D_a max.	r_a max.	k_r	f_0
mm					mm			–	
12	14,8	18,3	–	0,3	14	19	0,3	0,015	13
	16	20,3	–	0,3	14	22	0,3	0,02	15
	17	23,2	24,8	0,3	14	26	0,3	0,025	13
	17	23,4	24,8	0,3	14,4	27,6	0,3	0,025	13
	18,4	25,7	27,4	0,6	16,2	27,8	0,6	0,025	12
	19,5	29,5	31,5	1	17,6	31,4	1	0,03	11
15	17,8	21,3	–	0,3	17	22	0,3	0,015	14
	18,8	24,2	25,3	0,3	17	26	0,3	0,02	14
	20,5	26,7	28,2	0,3	17	30	0,3	0,02	14
	20,5	26,7	28,2	0,3	17	30	0,3	0,025	14
	21,7	29	30,4	0,6	19,2	30,8	0,6	0,025	13
	23,7	33,7	36,3	1	20,6	36,4	1	0,03	12
17	19,8	23,3	–	0,3	19	24	0,3	0,015	14
	20,4	26,6	27,7	0,3	19	28	0,3	0,02	15
	23	29,2	31,2	0,3	19	33	0,3	0,02	14
	23	29,2	31,2	0,3	19	33	0,3	0,025	14
	24,5	32,7	35	0,6	21,2	35,8	0,6	0,025	13
	24,5	32,7	–	0,6	21,2	35,8	0,6	0,03	12
	26,5	37,4	39,6	1	22,6	41,4	1	0,03	12
	32,4	46,6	48,7	1,1	23,5	55,5	1	0,035	11
20	23,8	28,3	–	0,3	22	30	0,3	0,015	15
	25,5	31,4	32,7	0,3	22	35	0,3	0,02	15
	27,3	34,6	–	0,3	22	40	0,3	0,02	15
	27,2	34,8	37,2	0,6	23,2	38,8	0,6	0,025	14
	28,8	38,5	40,6	1	25,6	41,4	1	0,025	13
	28,2	39,6	–	1	25,6	41,4	1	0,025	12
	30,3	41,6	44,8	1,1	27	45	1	0,03	12
	30,3	42,6	–	1,1	27	45	1	0,03	12
	37,1	54,8	–	1,1	29	63	1	0,035	11
22	32,2	41,8	44	1	27,6	44,4	1	0,025	14
	32,9	45,3	–	1,1	29	47	1	0,03	12

ETSEIB

A.7. Dewetron Universal Data Acquisition Instrument DEWE-43

Automotive
Energy & Power Analysis
Aerospace
Transportation
General Test & Measurement

DEWE-43
Universal Data Acquisition Instrument

When connected to the high speed USB 2.0 interface of any computer the DEWE-43 becomes a powerful measurement instrument for analog, digital, counter and CAN bus data capture.

Eight simultaneous analog inputs sample data at up to 204.8 kS/s and in combination with DEWETRON Modular Smart Interface modules (MSI) a wide range of sensors are supported

- *Voltage*
- *Pressure*
- *Temperature*
- *Position*
- *Torque*
- *Velocity*
- *Acceleration*
- *Force*
- *Sound*
- *RPM*
- *Frequency*
- *And more*

The included DEWESoft application software adds powerful measurement and analysis capability, turning the DEWE-43 into a dedicated recorder, scope or FFT analyzer.

Key Features

- *Best price/performance ratio*
- *Connects to any computer via USB interface*
- *8 simultaneous sampled analog inputs*
- *24-bit resolution, up to 204.8 kS/s per channel*
- *8 counter inputs or 24 digital inputs*
- *2 high speed CAN interfaces*
- *CPAD2 expansion for static signals*
- *DEWESoft instrument software included*

The DEWE-43 is a perfect fit for

- *Mobile applications*
- *Field-service*
- *Maintenance*
- *Debug and diagnostic tasks*

PORTABLE INSTRUMENTS DEWE-43

Re-inventing Data Acquisition

worldwide DEWETRON
www.dewetron.com

1

SPECIFICATIONS		DEWE-43-DSA	DEWE-43
ANALOG INPUT			
Number of channels		8 (simultaneously sampled)	
Measured values		Voltage, full bridge (IEPE, charge, thermocouple and RTD with MSI adapters)	
Resolution		24-bit	
Type of A_{DC}		Sigma-Delta	
Sampling rate		DEWE-43-DSA: 204.8 kS/s	DEWE-43: 51.2 kS/s
-3 dB bandwith		76 kHz @ 204.8 kS/s (25 kHz @ 51,2 kS/s)	
Input Ranges	Voltage	±0.01 V, ±0.1 V, ±1 V, ±10 V	
	Voltage via MSI-BR-V200	up to ±200 V	
	Full bridge	±10 mV/V, ±100 mV/V, ±1000 mV/V	
	Half or quarter bridge	With external bridge completion	
	IEPE via MSI-BR-ACC	±0.1 V, ±1 V, ±10 V	
	Thermocouple via MSI-BR-TH-x	Full range of thermocouple type (isolated thermocouple only)	
	Pt100, Pt200, Pt500, Pt1000, Pt2000 and resistance via MSI-BR-RTD	-200°C to 1000°C and 0 to 6.5 kOhm	
AMPLIFIER CHARACTERISTICS			
Accuracy		±0.1 % of range, ±0.5 mV	
Input impedance		10 MΩ||33 pF (common mode), 20 MΩ||47 pF (differential mode)	
CMRR		>80 dB	
Sensor supply voltage		±5 V 0.1 % @ 50 mA, 12 V @ 100 mA per channel (total max. 5W)	
Voltage mode coupling		DC	
Overvoltage protection		±70 V	
DYNAMIC CHARACTERISTICS			
Signal to noise @ fs<1000 Hz		< 100 dB	
Crosstalk		< 100 dB	
COUNTER/DIGITAL INPUTS			
Number of channels		8 counters or 24 digital inputs (per software each counter can be selected to be 3x digital input)	
Counter modes		Event counting, encoder input, period, pulsewidth, duty cycle, frequency measurement	
Resolution		32-bit	
Time base		102.4 MHz	
Signal levels		TTL/CMOS	
Input voltage protection		30 V	
CAN INPUTS			
Number of channels		2	
Specification		CAN 2.0B, up to 1 MBaud	
Physical layer		High speed	
ENVIRONMENTAL			
Operating temperature		0 to 50°C	
Storage temperature		-20 to 70°C	
Relative humidity		95 % non condensing @ 60°C	
PROCESSING			
System		Requires PC based system with DEWESoft software	
Interface		USB 2.0	
POWER REQUIREMENTS			
Supply voltage		6 to 36 V_{DC}	
Supply overvoltage protection		80 V	
Negative input voltage protection		-30 V	
Typical power consumption		Typ. 5 W (max. 11 W at full sensor supply load)	
PHYSICAL			
Dimensions (L x W x H)		223 x 78 x 45 mm (7.78 x 3.08 x 1.77 inch)	
Weight		0.72 kg	
SOFTWARE			
Displays		Recorder, Scope, FFT, 3D Waterfall FFT, Octave, ...	
Triggers		Edge, Filtered Edge, Window, Pulsewidth, Slope, FFT, ...	
Online standard mathematics		Formula editor, FIR-, IIR-, FFT-filter, basic statistics, reference curve	
Online special mathematics		DEWE-43-DSA: Human Body Vibration, Order Tracking, Rotational & Torsional Vibration, Sound Level, Frequency Response Function	-

ETSEIB

B. ANTHROPOMETRIC PARAMETERS OF LOWER LIMB SEGMENTS

The length, mass and inertia moments that some authors propose for the considered body segments (thigh, shank and foot) are shown in Tables B.1, B.2 and B.3. The parameters of the test bench, obtained through the CAD program Solidworks, are detailed in Table B.4.

Subject's weight and height are the ones of the subject whose gait was captured in the Laboratory of Biomechanics at the Department of Mechanical Engineering at ETSEIB [Sistiaga, 2012; Arroyo, 2011]: 81 kg and 1,90 m.

Definitions:

- L length of the segment (thigh, shank or foot)
- L_S height of the subject
- M mass of the segment (thigh, shank or foot)
- M_S mass of the subject
- L_{CoM} distance between the centre of mass and the segment's proximal joint
- k_0 radius of gyration: it reflects the relationship between the moment of inertia with respect to the centre of mass and the total mass of the element: $k_0 = \sqrt{\frac{I_0}{m}}$
- I_0 moment of inertia of the segment (thigh, shank or foot) with respect to the centre of mass
- I_S moment of inertia of test bench's leg (shank and foot) with respect to the knee joint

D. A. Winter. *Biomechanics and motor control of human movement*, 2005

	Length		Mass		Centre of mass		Inertia		
	L/L_S	L	M/M_S	M	L_{CoM}/L	L_{CoM}	k_0/L	k_0	I_0
Units		[mm]		[kg]		[mm]		[mm]	[kg·mm²]
Tight	0,245	466	0,100	8,100	0,433	201,6	0,323	150,4	183117
Shank	0,246	467	0,047	3,767	0,433	202,4	0,302	141,2	75046
Foot	0,152	289	0,015	1,175	0,500	144,4	0,475	137,2	22102

Table B.1

P. De Leva. *Adjustments to Zatsiorsky-Selunayov's segment inertia parameters,* 1996									
	Length		Mass		Centre of mass		Inertia		
	L/L_S	L	M/M_S	M	L_{CoM}/L	L_{CoM}	k_0/L	k_0	I_0
Units		[mm]		[kg]		[mm]		[mm]	[kg·mm²]
Tight	0,243	461	0,194	15,712	0,410	188,7	0,329	151,6	361047
Shank	0,249	474	0,059	4,805	0,446	211,2	0,255	120,8	70084
Foot	0,148	282	0,019	1,520	0,442	124,4	0,257	72,4	7966

Table B.2

R. Dumas, L. Chèze, L.-P. Verriest. *Adjustments to McConville et al. and Young et al. body segment inertial parameters*, 2007									
	Length		Mass		Centre of mass		Inertia		
	L/L_S	L	M/M_S	M	L_{CoM}/L	L_{CoM}	k_0/L	k_0	I_0
Units		[mm]		[kg]		[mm]		[mm]	[kg·mm²]
Tight	0,244	464	0,153	12,376	0,429	198,9	0,30	139,1	239533
Shank	0,245	465	0,060	4,830	0,410	190,6	0,28	130,1	81806
Foot	0,150	284	0,015	1,207	0,436	124,0	0,25	71,1	6107

Table B.3

CAD model					
	Length	Mass	Centre of mass	Inertia	
	L	M	L_{CoM}	I_0	I_S
Units	[mm]	[kg]	[mm]	[kg·mm²]	[kg·mm²]
Shank	428,0	4,353	195,2	54256	-
Foot	302,0	1,400	1,0	12779	-
Shank + foot	-	5,775	324,2	211090	817823

Table B.4

The values of the designed CAD model are as similar as possible to the ones calculated from the literature, considering that the three bibliographic references present several different values and that there were other restrictions for the design.

C. CALCULATIONS

C.1. Loads for static and horizontal configuration

The situation where the leg of the test bench is in horizontal position and some loads are applied on it, is analysed (see Fig. C.1). The considered loads are: a force $F = 80$ N at point P, the weight $M{\cdot}g = 61$ N of the leg, the force F_Q made by the actuation system and the reaction F_S on the bearings.

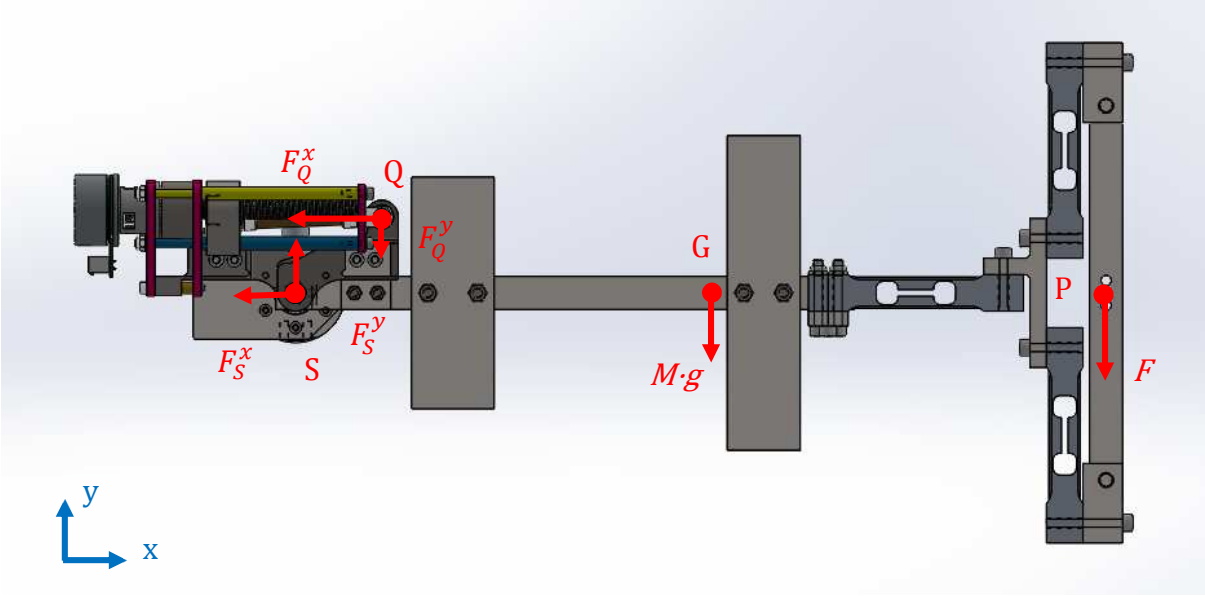

Fig. C.1. Points of application of the loads on the test bench.

This situation corresponds to the maximum load of the test bench, because the external force has the highest value that will appear. In this case, the force that should exert the actuation system to compensate the torque created by that force is very high, and this also increases bearings' loads.

The equilibrium equations in this situation are:

$$F_S^x + F_Q^x = 0 \qquad \textbf{(C.1)}$$

$$F_S^y - F_Q^y = M \cdot g + F \qquad \textbf{(C.2)}$$

$$x_G \cdot M \cdot g + x_P \cdot F = y_Q \cdot F_Q^x - x_Q \cdot F_Q^y \quad \textbf{(C.3)}$$

where $x_G = 0{,}255$ m is the horizontal distance between points G and S, $x_P = 0{,}490$ m is the horizontal distance between points P and S, $x_Q = 0{,}052$ m is the horizontal distance between points Q and S, and $y_Q = 0{,}046$ is the vertical distance between points Q and S.

It is compulsory that force F_Q has the direction of the actuation system's rod, so the two components are related:

$$\frac{F_Q^y}{F_Q^x} = \tan\varphi_0 \quad \textbf{(C.4)}$$

The angle φ_0 is the one between the rod and the horizontal axis. For the considered configuration of the system it is $\varphi_0 = 2{,}59^o$.

From Eq. (C.4) it is obtained that:

$$F_Q^y = F_Q^x \cdot \tan\varphi_0 \quad \textbf{(C.5)}$$

Then, substituting Eq. (C.5) into Eq. (C.3) and operating:

$$F_Q^x = \frac{x_G \cdot M \cdot g + x_P \cdot F}{y_Q - x_Q \cdot tan\,\varphi_0} \quad \textbf{(C.6)}$$

$$F_Q^x = 1253 \text{ N} \quad \textbf{(C.7)}$$

Returning to Eq. (C.5) and substituting:

$$F_Q^y = 57 \text{ N} \quad \textbf{(C.8)}$$

From Eq. (C.1) it is obtained that:

$$F_S^x = F^x - F_Q^x \quad \textbf{(C.9)}$$

$$F_S^x = -1253 \text{ N} \quad \textbf{(C.10)}$$

And, finally, from Eq. (C.2) it is found that:

$$F_S^y = M \cdot g + F_Q^y + F^y \quad \textbf{(C.11)}$$

$$F_S^y = 198 \text{ N} \quad \textbf{(C.12)}$$

So, in this way, all the loads are completely known.

C.2. Loads on bearings

In all checking calculations for the bearings, the catalogue of SKF has been used [2012, pp. 63-92]. Fig. C.2 shows the free body diagram of the shaft. It allows to find the loads applied on the bearings.

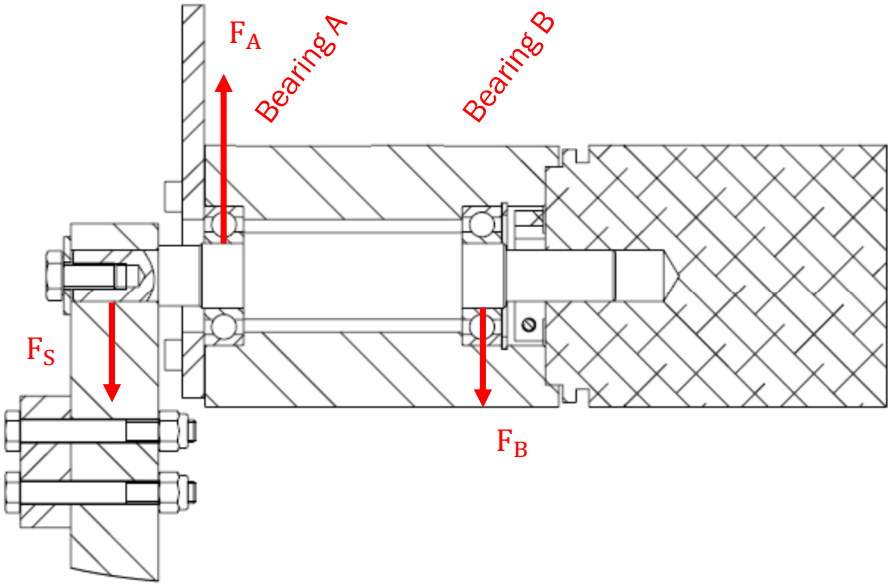

Fig. C.2. Loads applied on the shaft.

Eqs. (C.13) and (C.14) are the equilibrium equations of the body:

$$F_A = F_S + F_B \tag{C.13}$$

$$x_A \cdot F_A = x_B \cdot F_B \tag{C.14}$$

where $x_A = 28$ mm is the distance between F_S and F_A, and $x_B = 87$ mm is the distance between F_S and F_B.

Substituting Eq. (C.13) into Eq. (C.14) and operating, it is found that:

$$x_A \cdot F_S + x_A \cdot F_B = x_B \cdot F_B \tag{C.15}$$

$$F_B = \frac{x_A}{x_B - x_A} \cdot F_S \tag{C.16}$$

$$F_B = 601 \text{ N} \quad \textbf{(C.17)}$$

And returning to Eq. (C.13):

$$F_A = 1868 \text{ N} \quad \textbf{(C.18)}$$

Then, the load on each ball bearing is now known.

C.3. Bolt coupling between actuation system and test bench

The whole checking process of bolt couplings has been done following Fenollosa [2009, pp. 81-84]. In this coupling (see Fig. C.3), which is the critical one, two bolts transfer the force F_Q from the distal support (actuation system) to the distal separator (test bench) thanks to the friction force F_f between the two parts.

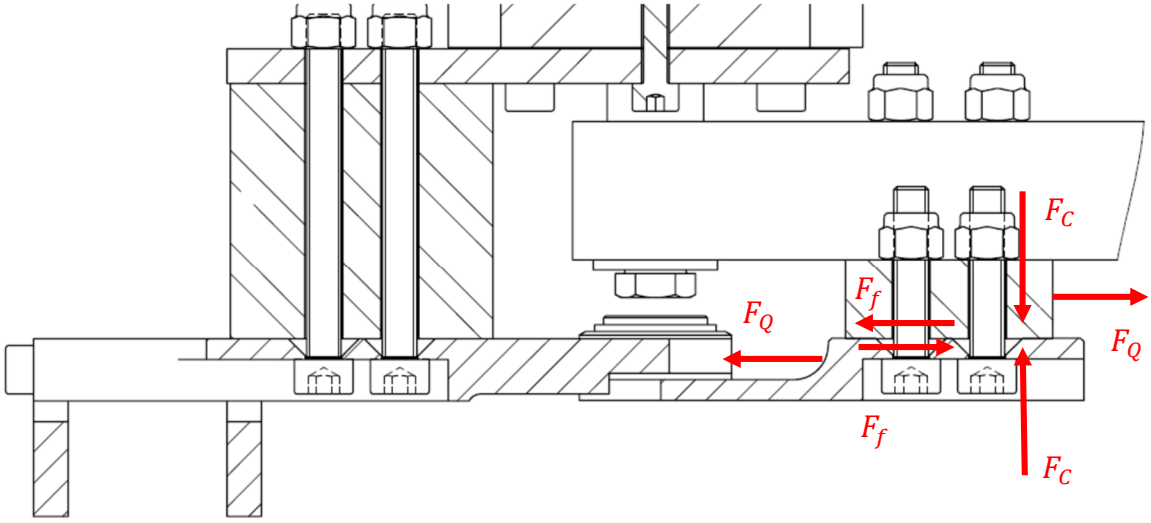

Fig. C.3. Drawing of the coupling: two bolts and two nuts allow to transmit the force F_Q from actuation system to distal separator. F_Q, force transmitted; F_f, friction force between parts; F_C, clamping force.

Usually, a safety factor, S_f, against slipping is stablished. The minimum clamping force F_C needed for the bolts depends on the transversal force, the friction coefficient between surfaces (μ), the number of bolts (n) and the number of surfaces in contact (m), as shown in Eq. (C.19):

$$F_{C\,min} = \frac{F_Q \cdot S_f}{n \cdot m \cdot \mu} \quad \textbf{(C.19)}$$

However, the clamping force must be higher because, after clamping the bolts, the parts settle and the force that maintains them joined decreases. This force reduction is reflected in Eq. (C.20):

$$\Delta F_C \approx \frac{1}{3} \cdot F_{C\,min} \quad \textbf{(C.20)}$$

So, the clamping force should be:

$$F'_{C\,min} = \Delta F_C + F_{C\,min} \quad \textbf{(C.21)}$$

$$F'_{C\,min} = \frac{4}{3} F_{C\,min} \quad \textbf{(C.22)}$$

$$F'_{C\,min} = \frac{4}{3} \frac{F_Q \cdot S_f}{n \cdot m \cdot \mu} \quad \textbf{(C.23)}$$

Then, the safety factor is:

$$S_f = \frac{3}{4} \frac{n \cdot m \cdot \mu \cdot F'_{C\,min}}{F_Q} \quad \textbf{(C.24)}$$

According to ISO standard [Fenollosa, 2009, p.75], the maximum clamping force for a bolt depends on the metric, the class and its lubrication. For bolts of metric M5 and fastened without lubrication ($\mu_G = 1{,}4$ [Fenollosa, 2009, p.41]):

Class 8.8: $F_{C\,8.8\,lim} = 6350$ M

Class 10.9: $F_{C\,10.9\,lim} = 8950$ M

Class 12.9: $F_{C\,12.9\,lim} = 10700$ M

D. DRAWINGS OF THE TEST BENCH

D.1. Assembly drawing and bill of materials

31	Washer M6	ISO 7093	1
30	Plastic plain bearing	IGUS JSM - 08 10 - 10	2
29	Security nut M5	ISO 10511	6
28	Security nut M6	ISO 10511	6
27	Socket head cap screw M5x55 - Class 10.9	ISO 4762	2
26	Socket head cap screw M5x25 - Class 10.9	ISO 4762	2
25	Socket head cap screw M6x40 - Class 8.8	ISO 4762	2
24	Socket head cap screw M6x30 - Class 8.8	ISO 4762	8
23	Socket head cap screw M6x45 - Class 8.8	ISO 4762	4
22	Socket head cap screw M4x92 - Class 8.8	Custom made	3
21	Socket head cap screw M4x16 - Class 8.8	ISO 4762	3
20	Hex head bolt M5x40x16 - Class 10.9	ISO 4014	2
19	Hex head bolt M6x12 - Class 8.8	ISO 4017	1
18	Hex head bolt M6x55x18 - Class 8.8	ISO 4014	4
17	Circlip D32	DIN 472	1
16	Bearing	SKF ball bearing 6002	2
15	Dowel pin d8xL30	ISO 2338	2
14	Load cell	Utilcell 102	3
13	Angular sensor	Hohner HS10-31312117	1
12	Foot support	Drawing 12	1
11	Ear	Drawing 11	2
10	Foot coupling	Drawing 10	1
9	Ankle coupling	Drawing 09	1
8	Ankle weight	Drawing 08	1
7	Calf weight	Drawing 07	1
6	Distal separator	Drawing 06	1
5	Distal support	Drawing 05	1
4	Shaft	Drawing 04	1
3	Proximal separator	Drawing 03	1
2	Proximal support	Drawing 02	1
1	Bearings tube	Drawing 01	1
PART NUMBER	PART NAME	REFERENCE	QUANTITY

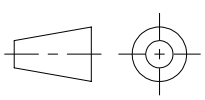

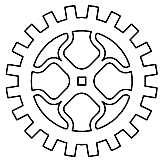

Departament d'Enginyeria Mecànica

Nom: Daniel Callejo Goena

Data: 20-5-2014

Material: - -

Escala: - -

Denominació: Bill of materials

Màquina: Test bench

Nº de plànol: 00

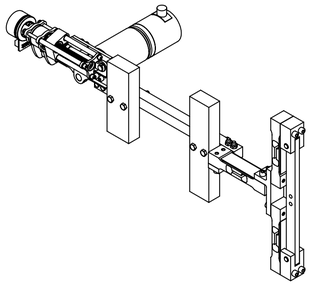

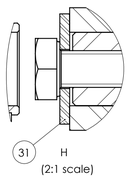

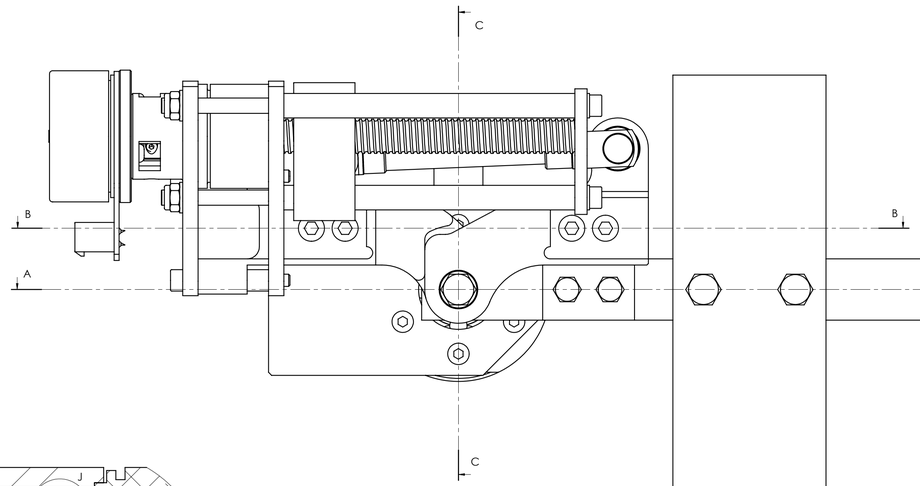

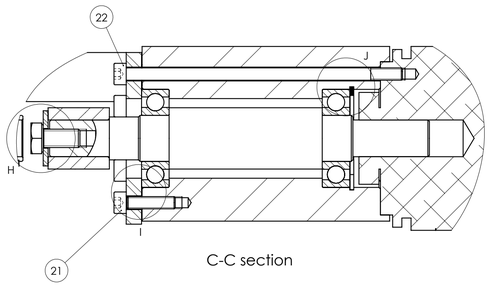

C-C section

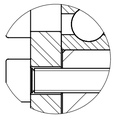

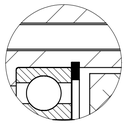

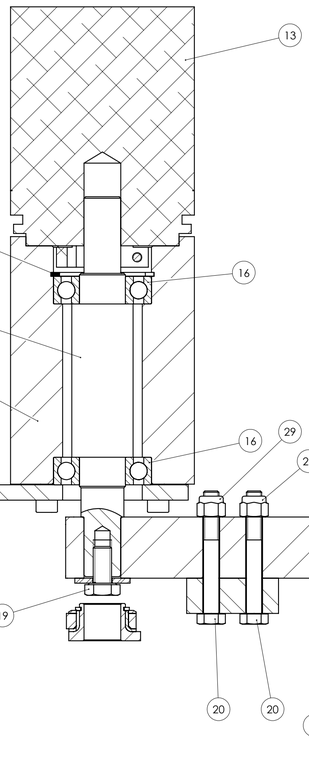

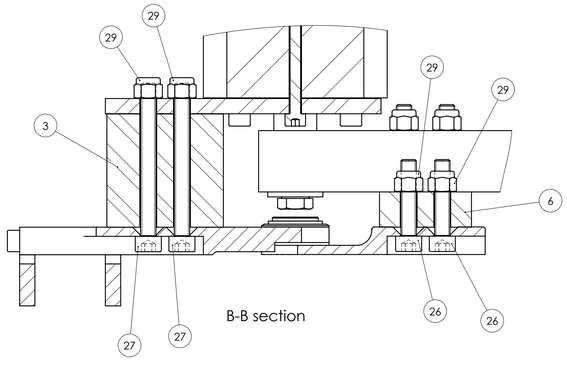

B-B section

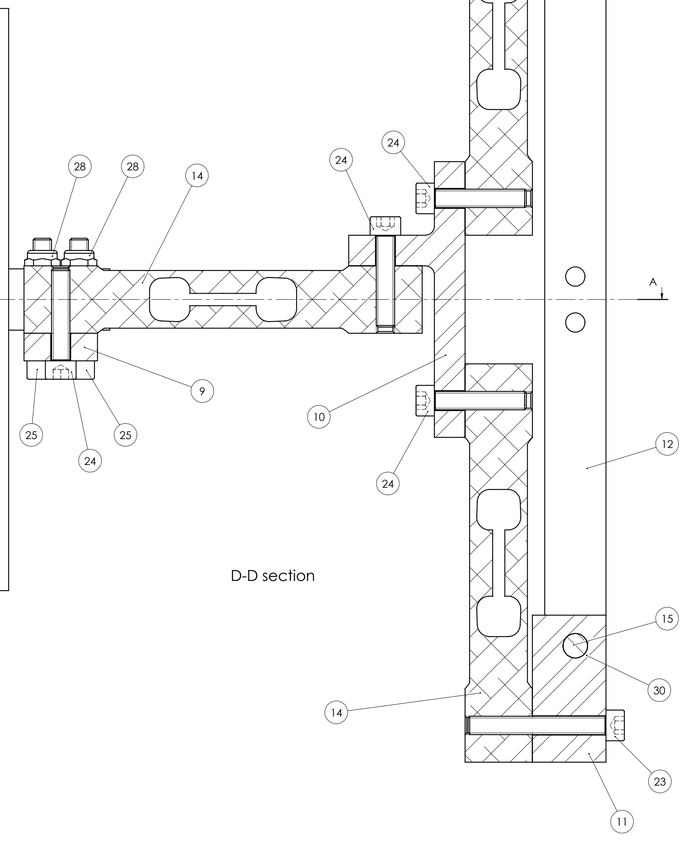

D-D section

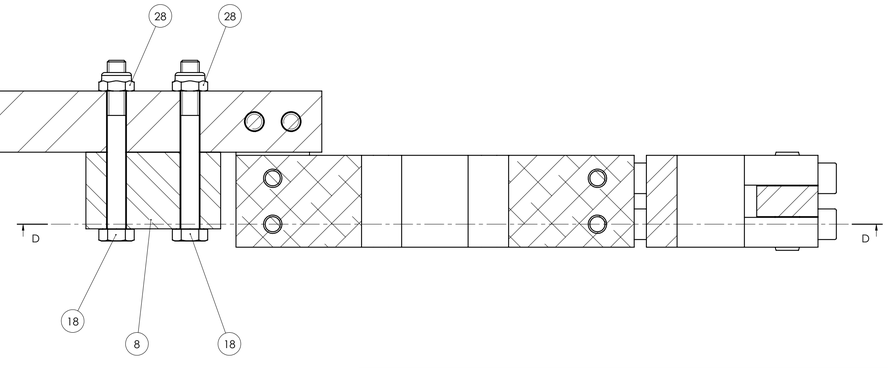

A-A section

	Departament d'Enginyeria Mecànica	Nom: Daniel Callejo Goena	Data: 20-5-2014	Material: - - / Escala: 1:1
		Denominació: Test bench		Màquina: - -
				Nº de plànol: 00

D.2. Parts' drawings

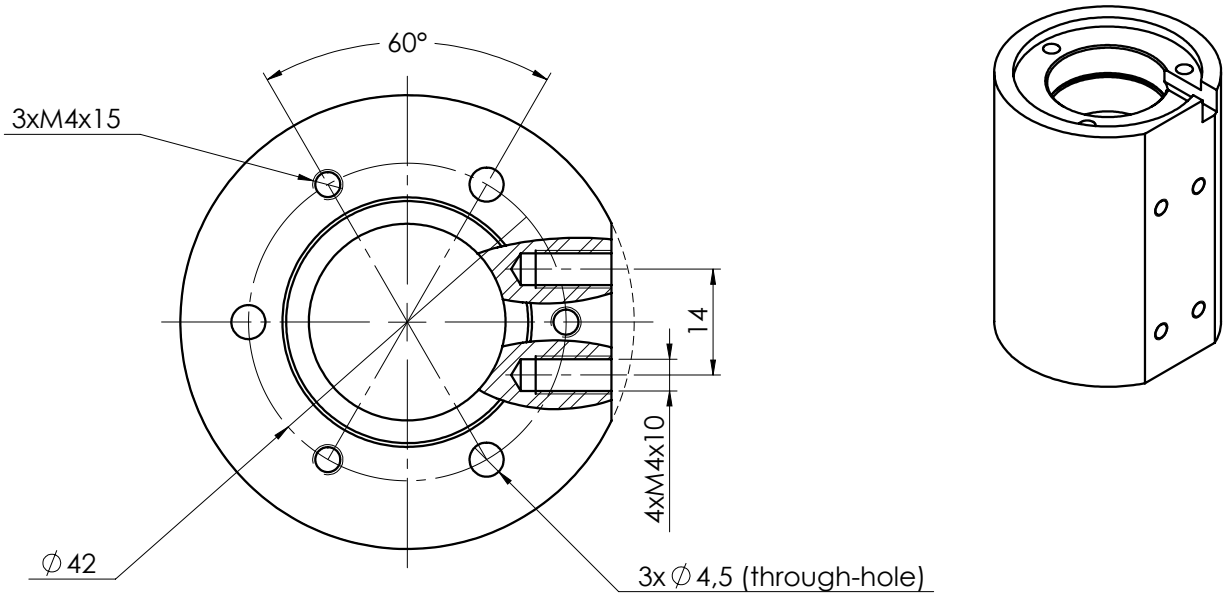

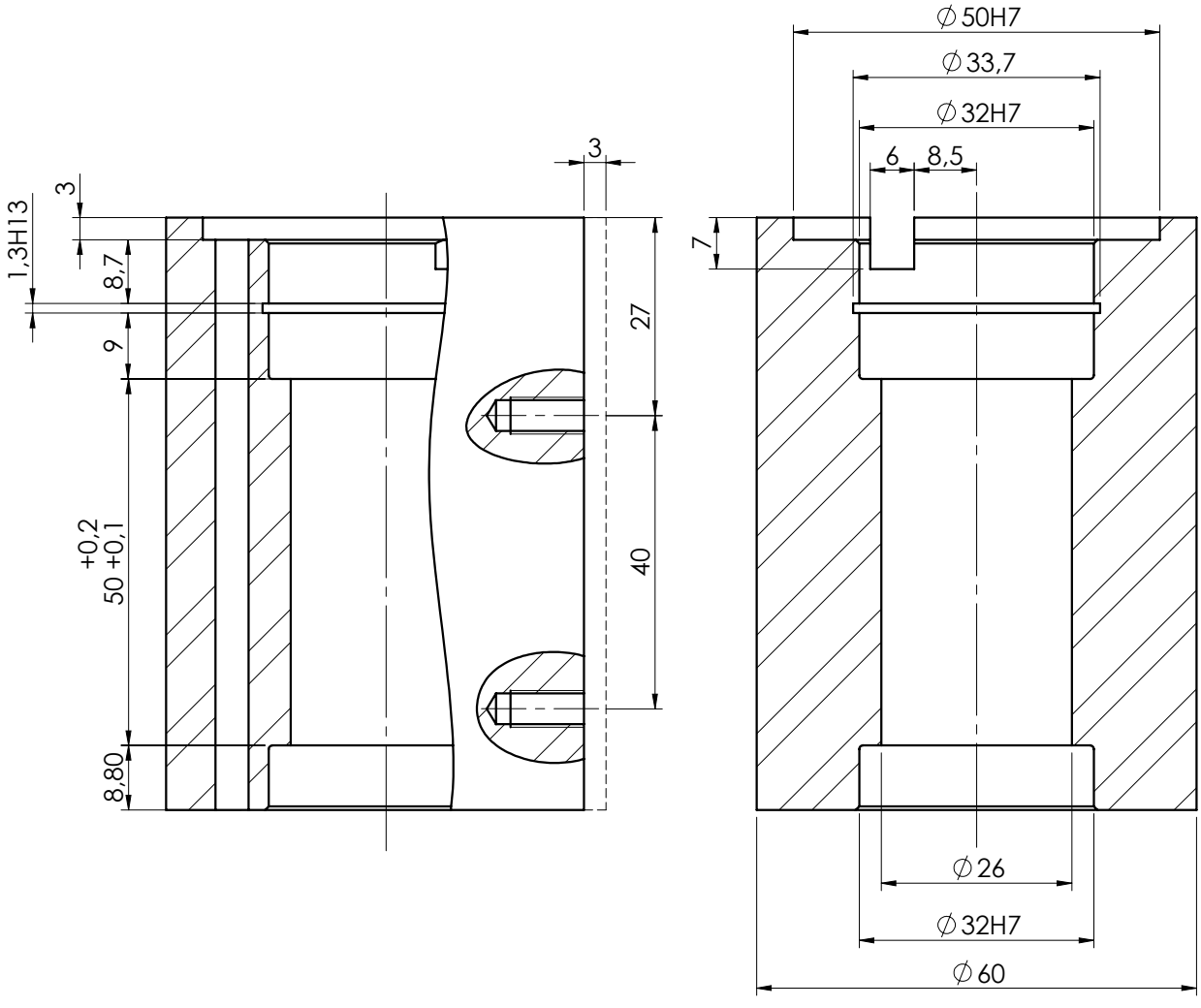

All chamfers are 0,5x45°
All tolerances not specified according to ISO 2768-m

	Departament d'Enginyeria Mecànica	Nom: Daniel Callejo Goena	Data: 20-5-2014	Material: Aluminium	Escala: 1:1
		Denominació: Bearings tube		Màquina: Test bench
				Nº de plànol: 01

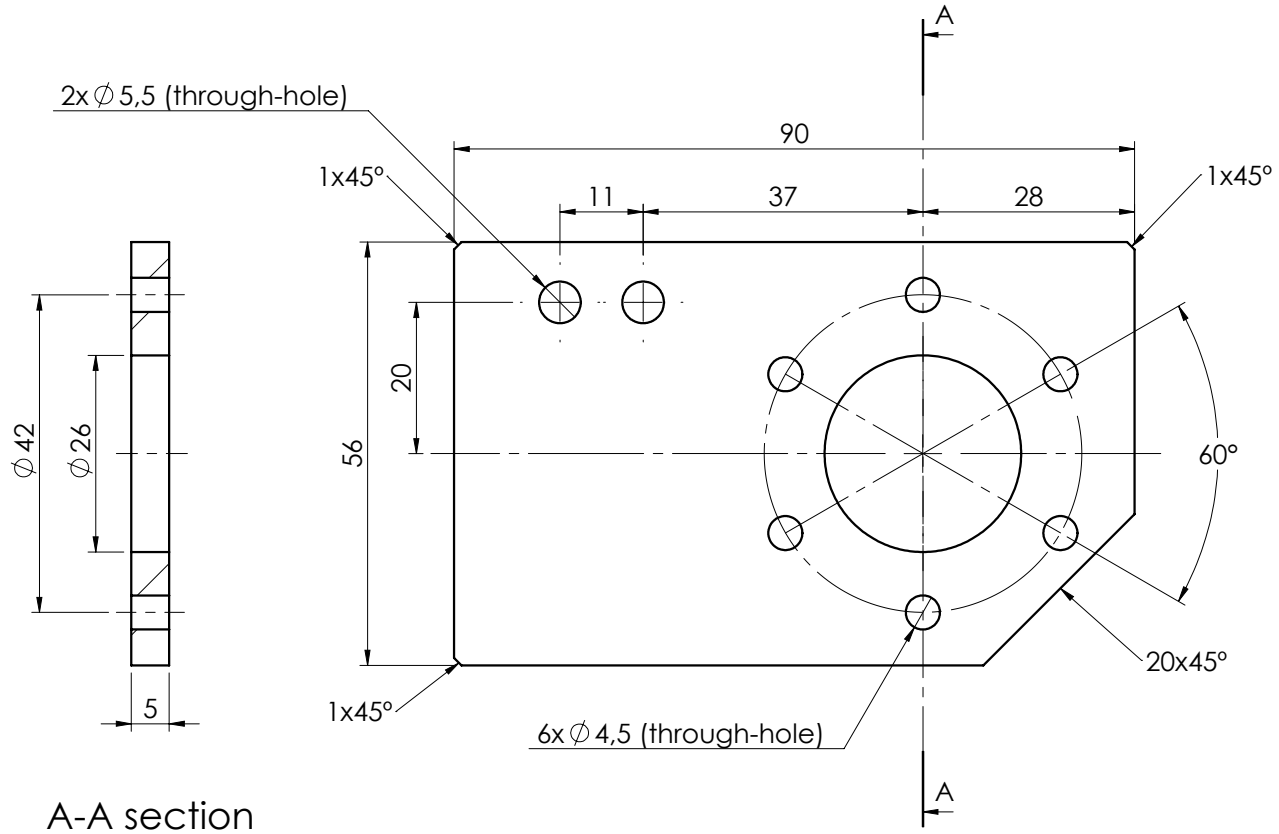

A-A section

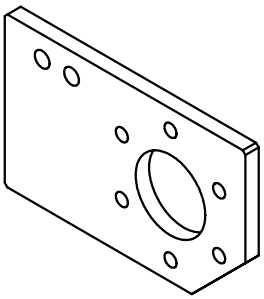

All tolerances according to ISO 2768-m

	Departament d'Enginyeria Mecànica	Nom: Daniel Callejo Goena / Data: 20-5-2014	Material: S 235	Escala: 1:1
		Denominació: Proximal support	Màquina: Test bench	
			Nº de plànol: 02	

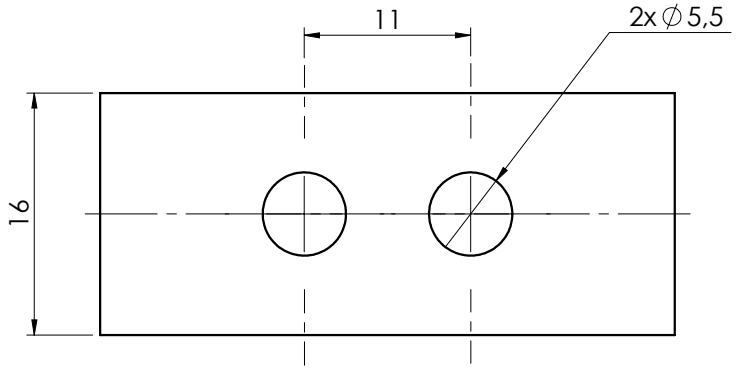

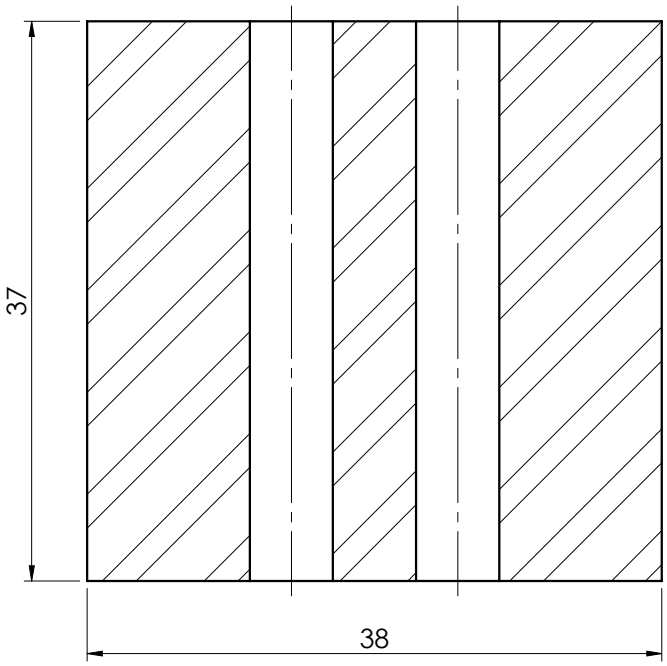

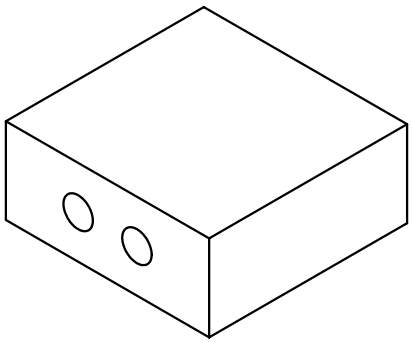

All tolerances according to ISO 2768-m

	Departament d'Enginyeria Mecànica	Nom: Daniel Callejo Goena Data: 20-5-2014	Material: S 235	Escala: 2:1
		Denominació: Proximal separator	Màquina: Test bench	
			Nº de plànol: 03	

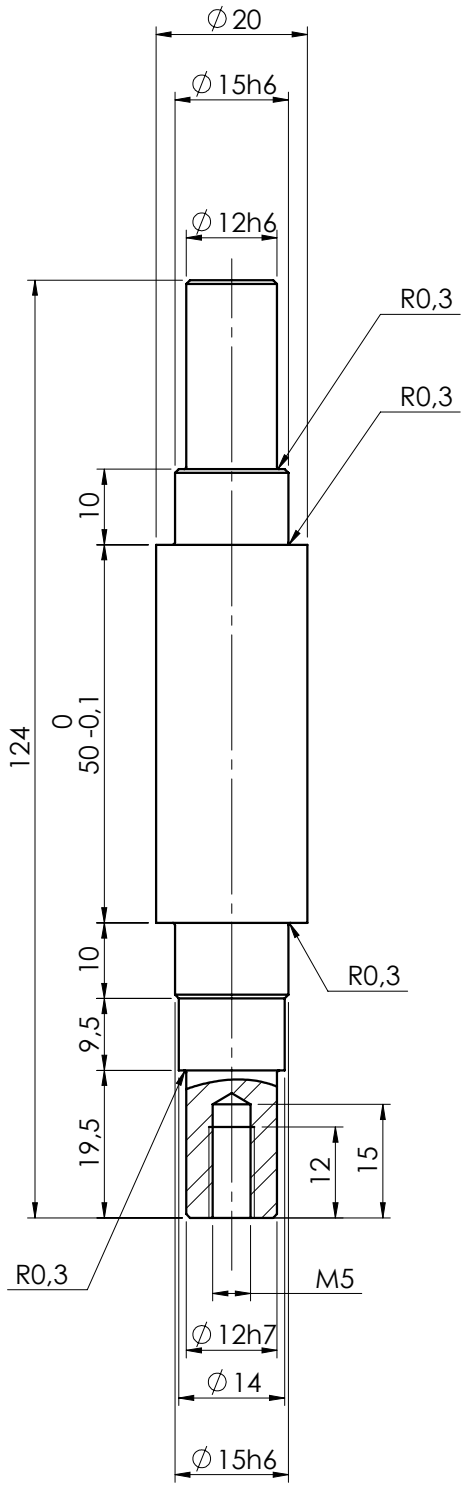

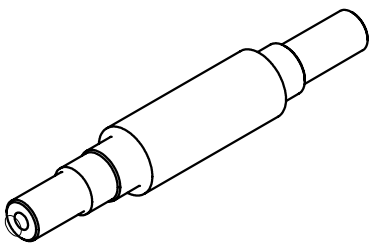

All chamfers are 0,5x45°
All tolerances not specified according to ISO 2768-m

	Nom: Daniel Callejo Goena	Data: 20-5-2014	Material: Aluminium	Escala: 1:1
	Denominació: Shaft		Màquina: Test bench	
Departament d'Enginyeria Mecànica			Nº de plànol: 04	

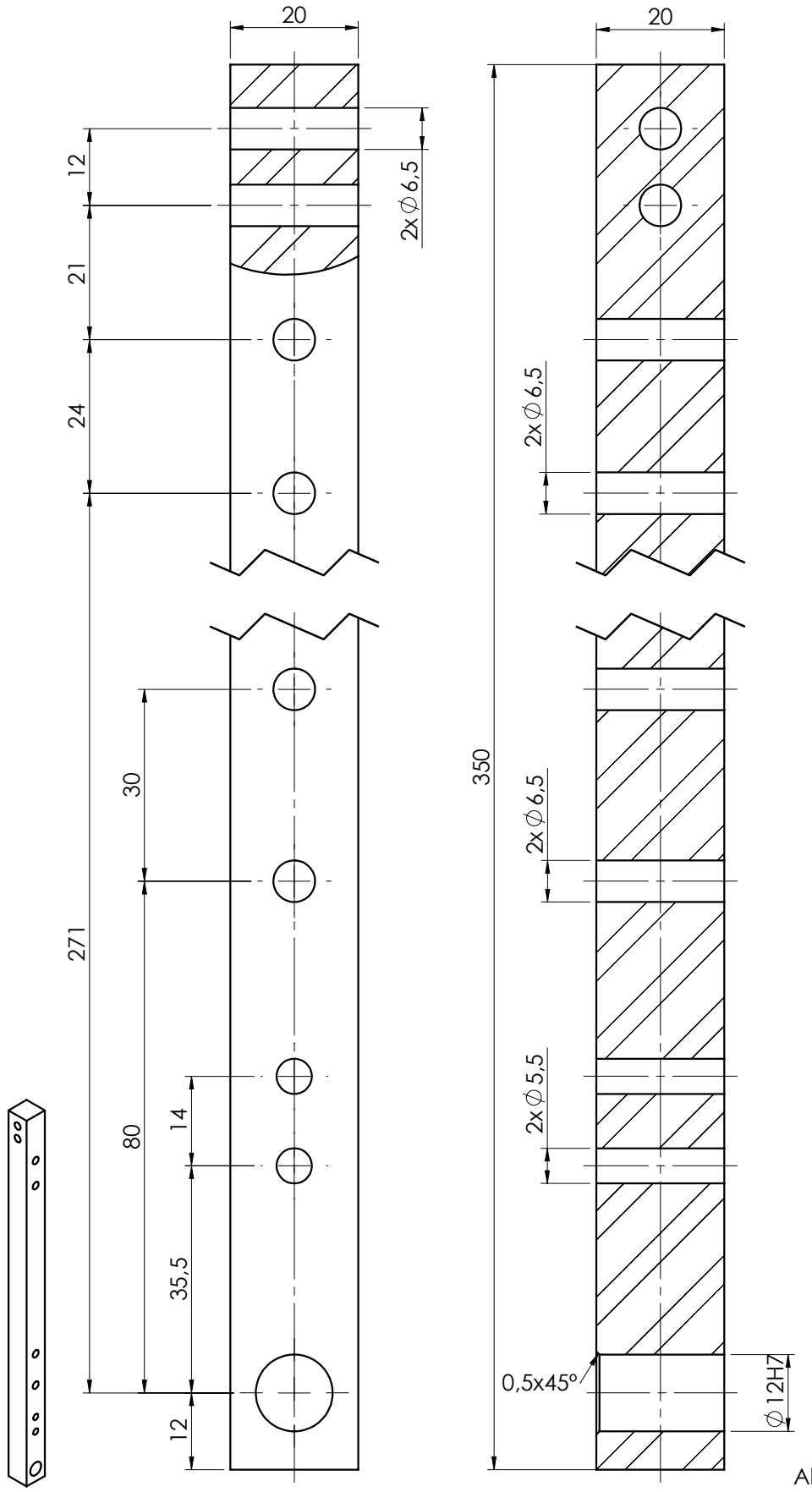

All tolerances not specified according to ISO 2768-m

	Nom: Daniel Callejo Goena	Data: 20-5-2014	Material: S 235	Escala: 1:1
Departament d'Enginyeria Mecànica	Denominació: Distal support		Màquina: Test bench	Nº de plànol: 05

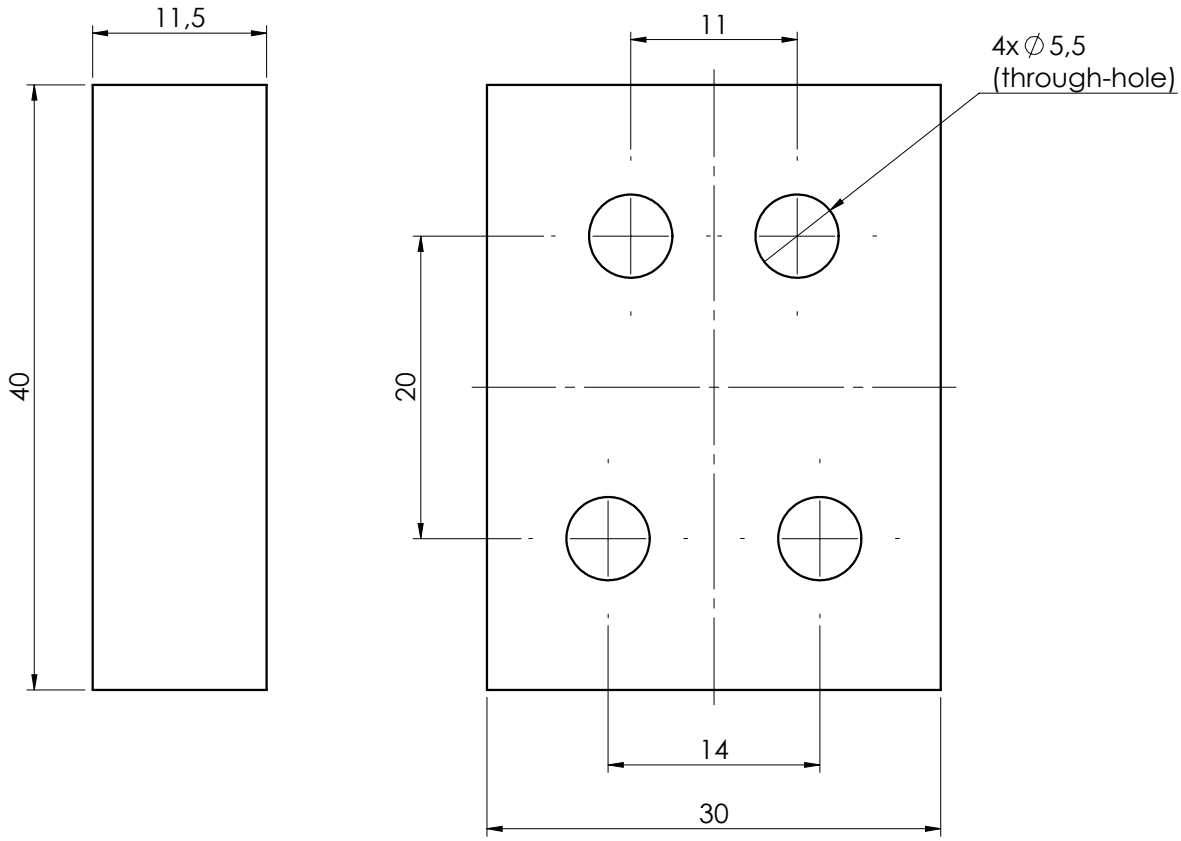

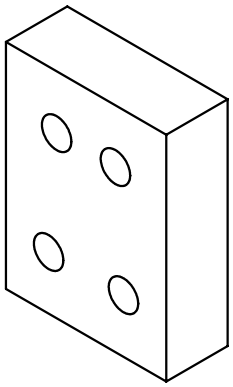

All tolerances according to ISO 2768-m

	Departament d'Enginyeria Mecànica	Nom: Daniel Callejo Goena / Data: 20-5-2014	Material: S 235	Escala: 2:1
		Denominació: Distal separator	Màquina: Test bench	
			Nº de plànol: 06	

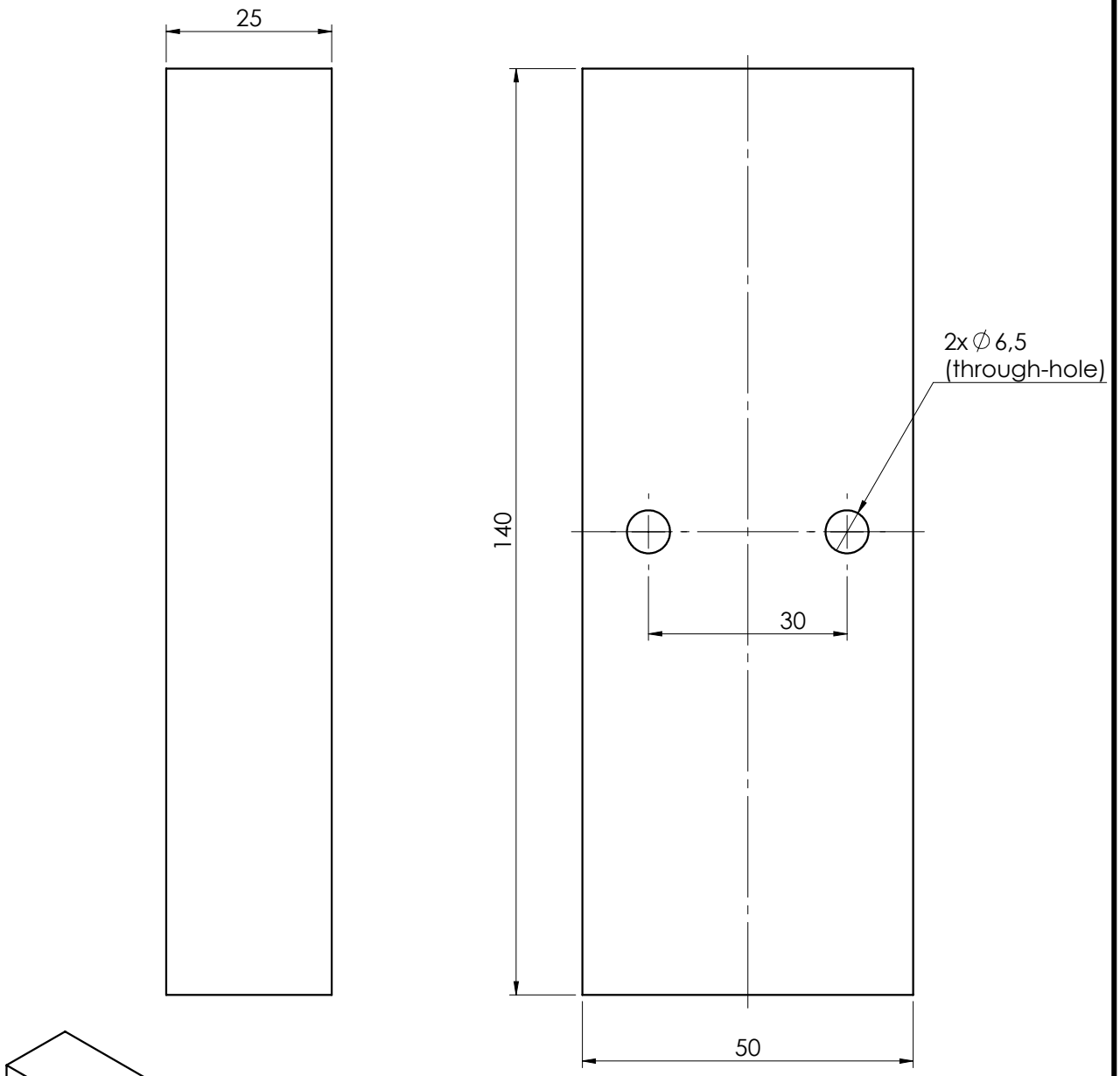

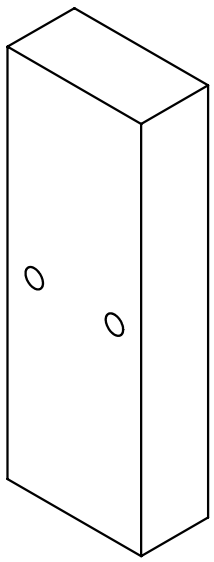

All tolerances according to ISO 2768-m

	Departament d'Enginyeria Mecànica	Nom: Daniel Callejo Goena — Data: 20-5-2014	Material: S 235	Escala: 1:1
		Denominació: Calf weight	Màquina: Test bench	
			Nº de plànol: 07	

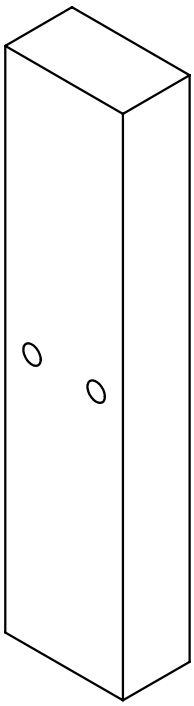

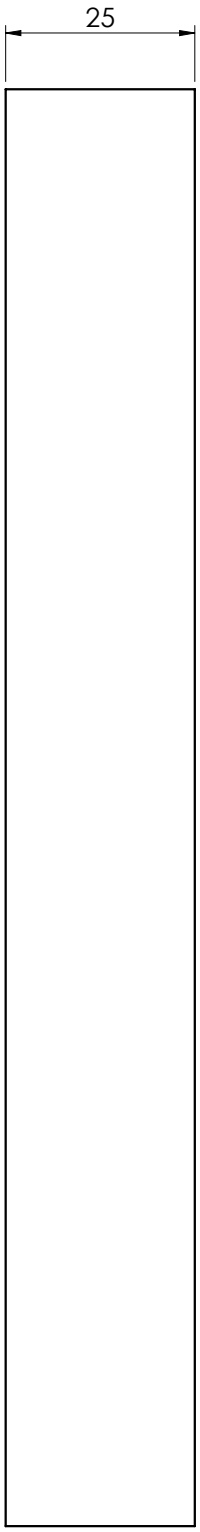

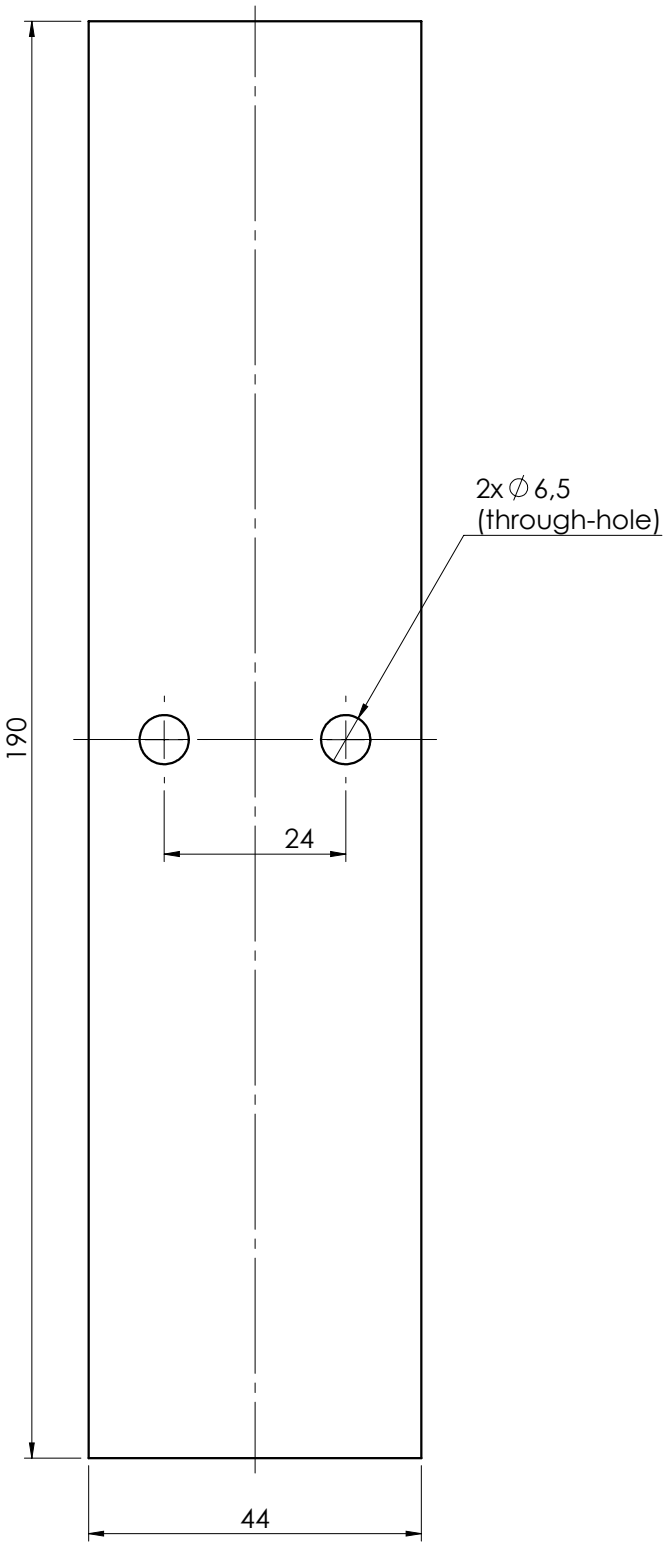

All tolerances according to ISO 2768-m

	Departament d'Enginyeria Mecànica	Nom: Daniel Callejo Goena	Data: 20-5-2014	Material: S 235	Escala: 1:1
		Denominació: Ankle weight		Màquina: Test bench
				Nº de plànol: 08

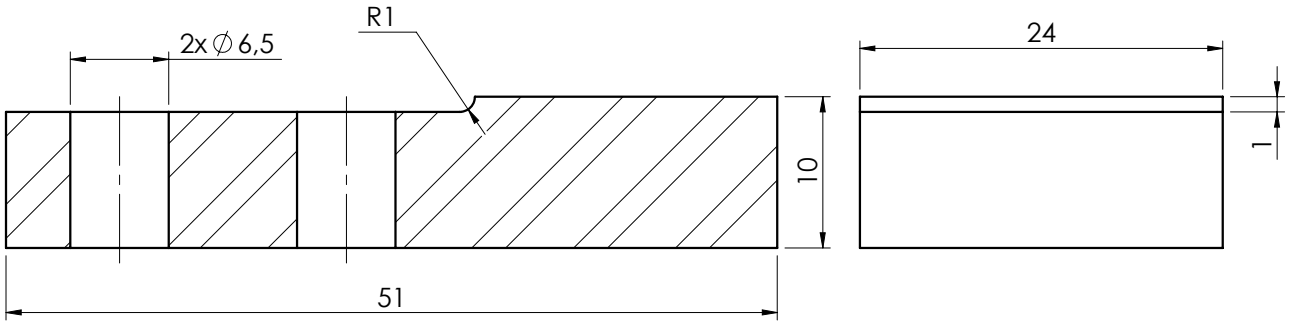

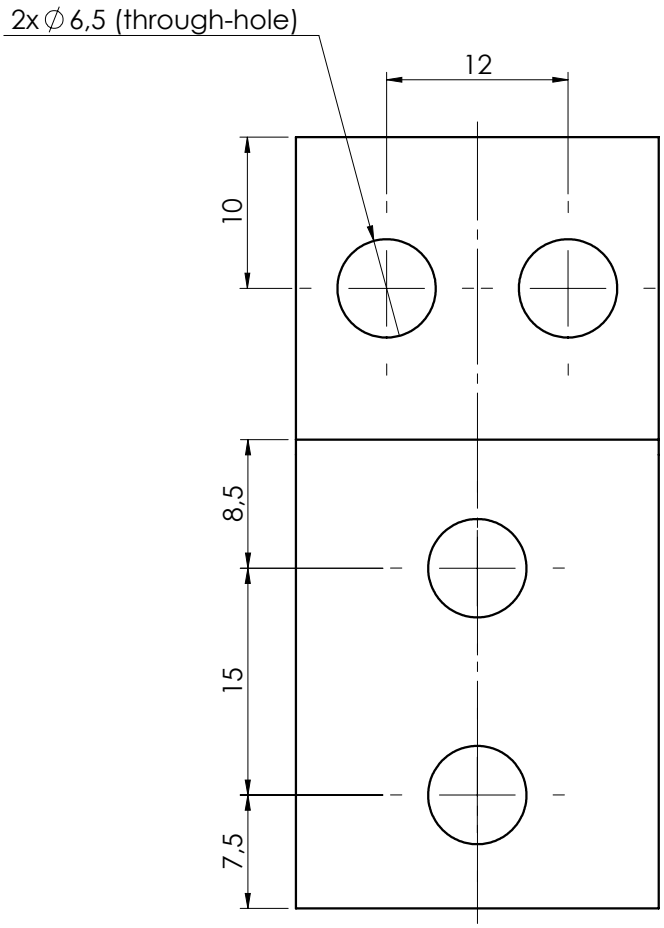

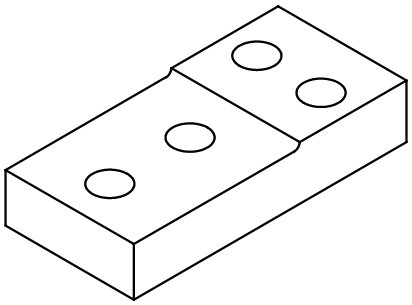

All tolerances according to ISO 2768-m

	Departament d'Enginyeria Mecànica	Nom: Daniel Callejo Goena — Data: 20-5-2014	Material: S 235	Escala: 2:1
		Denominació: Ankle coupling	Màquina: Test bench	
			Nº de plànol: 09	

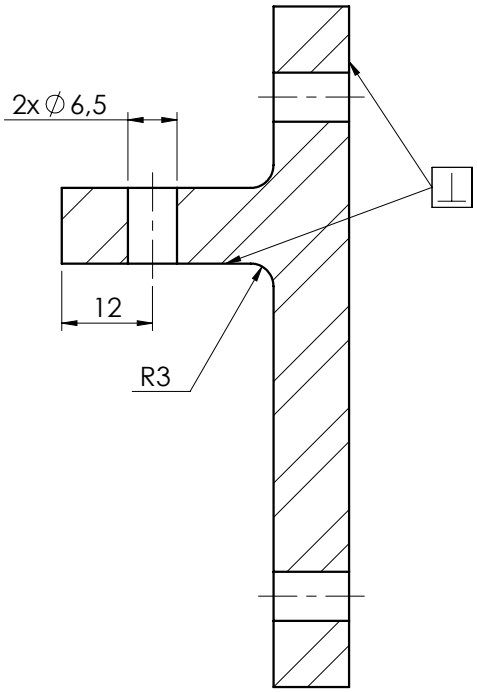

A-A section

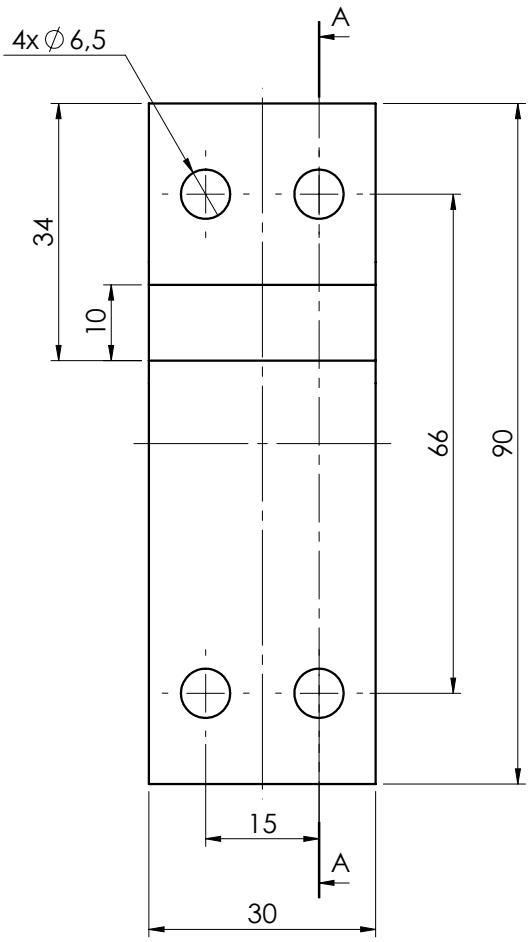

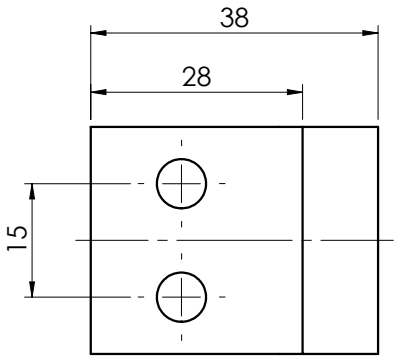

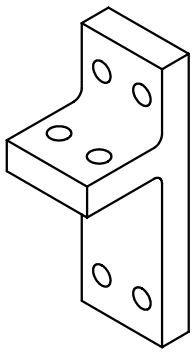

All tolerances according to ISO 2768-m

	Departament d'Enginyeria Mecànica	Nom: Daniel Callejo Goena / Data: 20-5-2014	Material: S 235	Escala: 1:1
		Denominació: Foot coupling	Màquina: Test bench	
			Nº de plànol: 10	

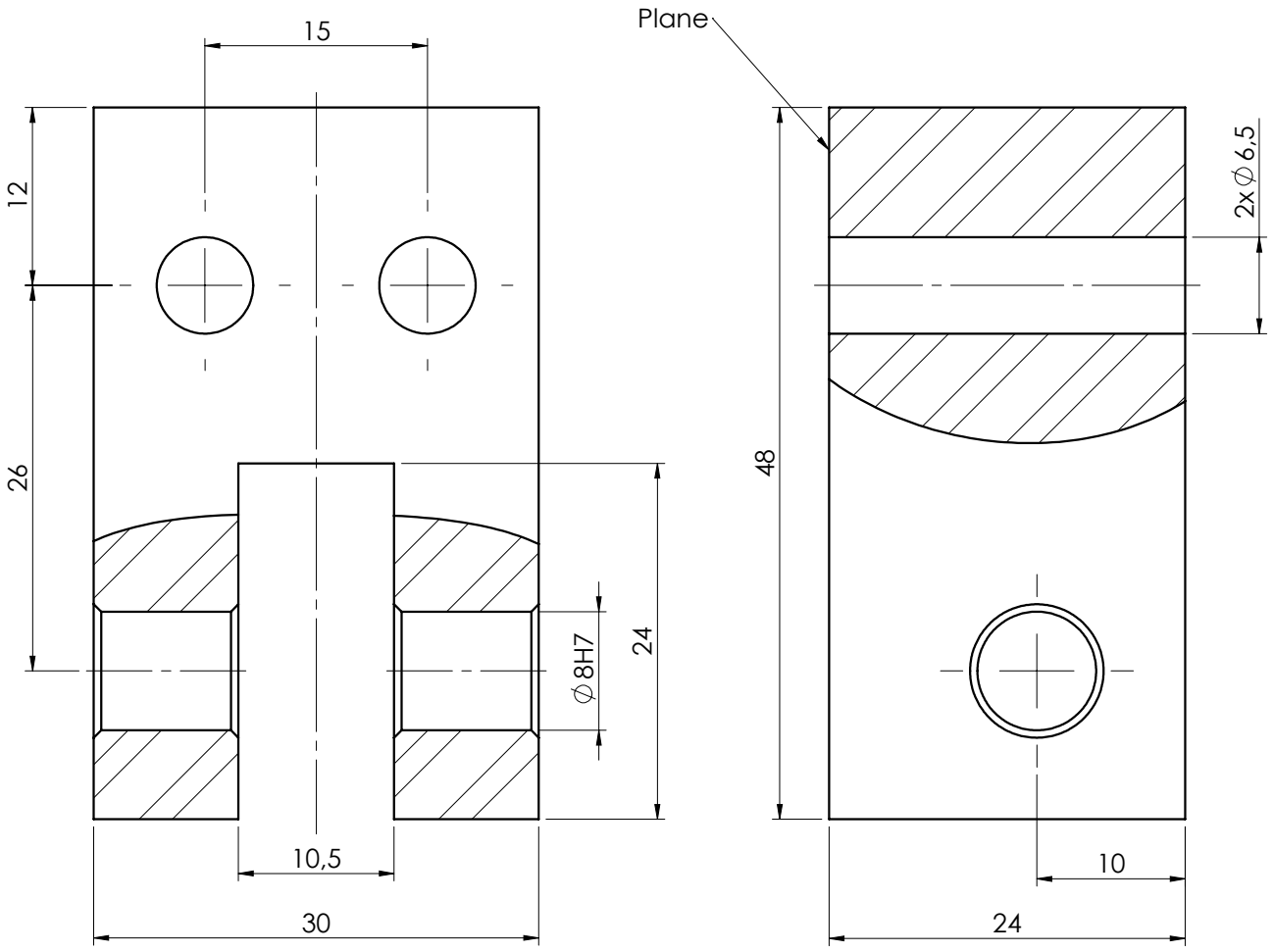

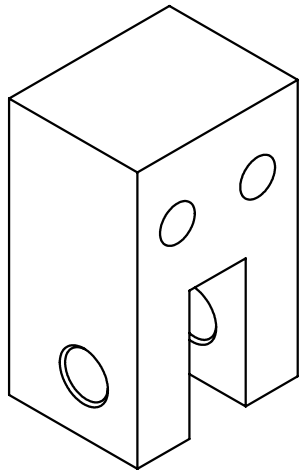

All chamfers are 0,5x45°
All tolerances not specified according to ISO 2768-m

	Departament d'Enginyeria Mecànica	Nom: Daniel Callejo Goena	Data: 20-5-2014	Material: S 235	Escala: 2:1
		Denominació: Ear		Màquina: Test bench
				Nº de plànol: 11

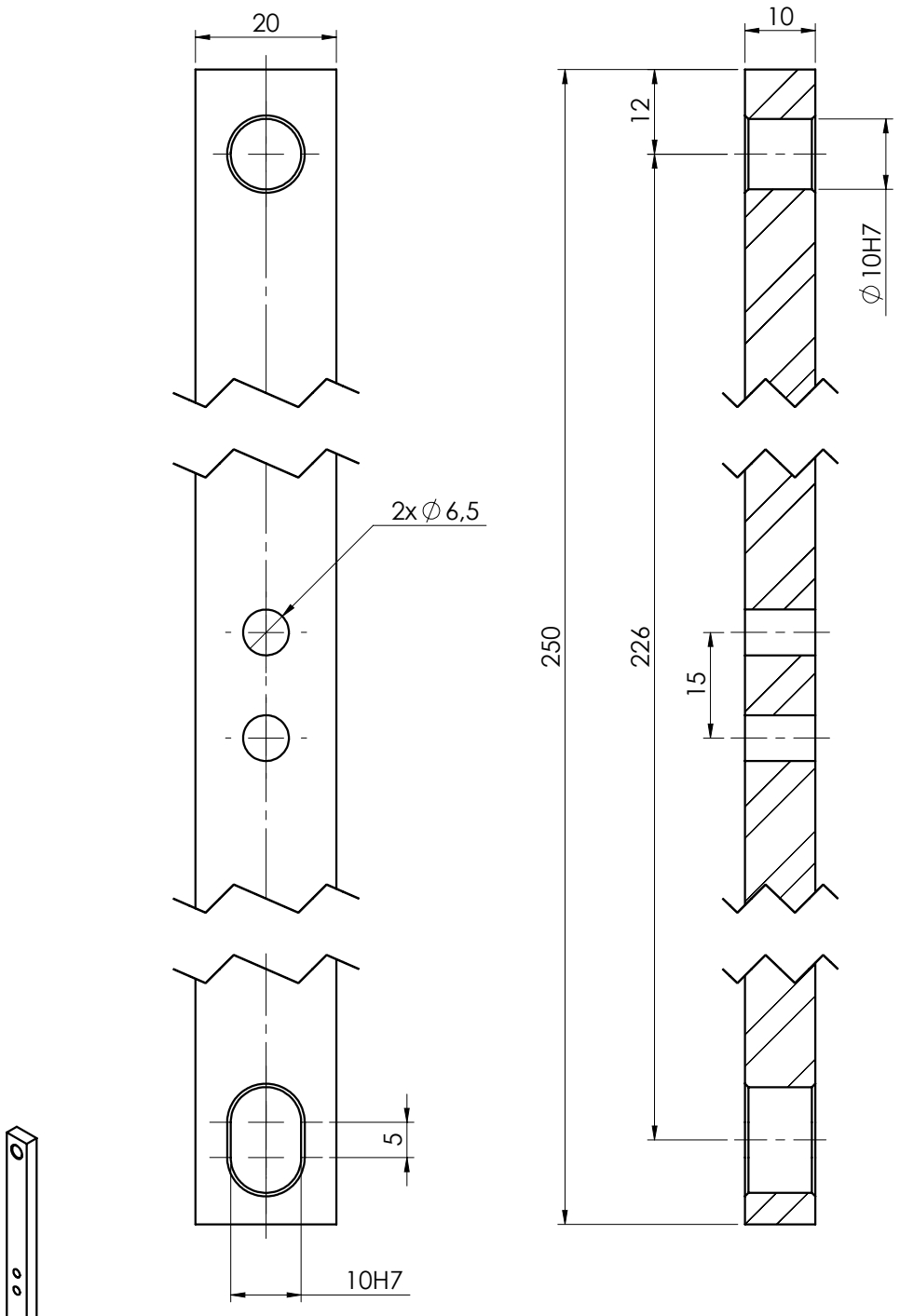

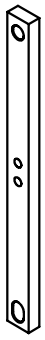

All chamfers are 0,5x45°
All tolerances not specified according to ISO 2768-m

	Departament d'Enginyeria Mecànica	Nom: Daniel Callejo Goena	Data: 20-5-2014	Material: S 235	Escala: 1:1
		Denominació: Foot support		Màquina: Test bench
				Nº de plànol: 12